(12) INTERNATIONAL APPLICATION PUBLISHED UNDER THE PATENT COOPERATION TREATY (PCT)

(19) World Intellectual Property Organization
International Bureau

(43) International Publication Date
19 August 2010 (19.08.2010)

PCT

(10) International Publication Number
WO 2010/091704 A1

(51) International Patent Classification:
C22C 47/14 (2006.01) ***C01B 31/02*** (2006.01)
C22C 49/14 (2006.01)

(21) International Application Number:
PCT/EP2009/006737

(22) International Filing Date:
17 September 2009 (17.09.2009)

(25) Filing Language: English

(26) Publication Language: English

(30) Priority Data:
10 2009 009 110.6
16 February 2009 (16.02.2009) DE

(71) Applicant *(for all designated States except US)*: **BAYER INTERNATIONAL SA** [CH/CH]; Route de Beaumont 10, CH-1701 Fribourg (CH).

(72) Inventors; and
(75) Inventors/Applicants *(for US only)*: **ZOZ, Henning** [DE/DE]; c/o Zoz GmbH, Maltozstr. 1, 57482 Wenden (DE). **DVORAK, Michael** [DE/CH]; c/o TSB GmbH, CH-3608 Thun (CH). **ADAMS, Horst** [CH/CH]; c/o Bayer International SA, Rte de Beaumont 10, CH-1701 Fribourg (CH).

(74) Agents: **LUCKE, Andreas** et al.; BOEHMERT & BOEHMERT, Pettenkoferstraβe 20-22, 80336 München (DE).

(81) Designated States *(unless otherwise indicated, for every kind of national protection available)*: AE, AG, AL, AM, AO, AT, AU, AZ, BA, BB, BG, BH, BR, BW, BY, BZ, CA, CH, CL, CN, CO, CR, CU, CZ, DE, DK, DM, DO, DZ, EC, EE, EG, ES, FI, GB, GD, GE, GH, GM, GT, HN, HR, HU, ID, IL, IN, IS, JP, KE, KG, KM, KN, KP, KR, KZ, LA, LC, LK, LR, LS, LT, LU, LY, MA, MD, ME, MG, MK, MN, MW, MX, MY, MZ, NA, NG, NI, NO, NZ, OM, PE, PG, PH, PL, PT, RO, RS, RU, SC, SD, SE, SG, SK, SL, SM, ST, SV, SY, TJ, TM, TN, TR, TT, TZ, UA, UG, US, UZ, VC, VN, ZA, ZM, ZW.

(84) Designated States *(unless otherwise indicated, for every kind of regional protection available)*: ARIPO (BW, GH, GM, KE, LS, MW, MZ, NA, SD, SL, SZ, TZ, UG, ZM, ZW), Eurasian (AM, AZ, BY, KG, KZ, MD, RU, TJ, TM), European (AT, BE, BG, CH, CY, CZ, DE, DK, EE, ES, FI, FR, GB, GR, HR, HU, IE, IS, IT, LT, LU, LV, MC, MK, MT, NL, NO, PL, PT, RO, SE, SI, SK, SM, TR), OAPI (BF, BJ, CF, CG, CI, CM, GA, GN, GQ, GW, ML, MR, NE, SN, TD, TG).

Published:

— *with international search report (Art. 21(3))*

WO 2010/091704 A1

(54) Title: A COMPOUND MATERIAL COMPRISING A METAL AND NANO PARTICLES AND A METHOD FOR PRODUCING THE SAME

(57) Abstract: Disclosed herein is a composite material comprising a metal and nano particles, in particular carbon nano tubes as well as a method of producing the same. A metal powder and the nano particles are processed by mechanical alloying, such as to form a composite comprising metal crystallites having an average size in the range of 1 - 100 nm, preferably 10 to 100 run at least partly separated from each other by said nano particles.

A Compound Material Comprising a Metal and Nano Particles and a Method for Producing the Same

TECHNICAL FIELD

The present invention relates to compound materials comprising a metal and nano particles, in particular carbon nano tubes (CNT) as well as to methods for producing the same.

BACKGROUND ART

Carbon nano tubes (CNT), sometimes also referred to as "carbon fibrils" or "hollow carbon fibrils", are typically cylindrical carbon tubes having a diameter of 3 to 100 nm and a length which is a multiple of their diameter. CNTs may consist of one or more layers of carbon atoms and are characterized by cores having different morphologies.

CNTs have been known from the literature for a long time. While Iijima (s. Iijima, Nature 354, 56 – 58, 1991) is generally regarded as the first to discover CNTs, in fact fibre shaped graphite materials having several graphite layers have been known since the 1970s and 1980s. For example, in GB 14 699 30 A1 and EP 56 004 A2, Tates and Baker described for the first time the deposition of very fine fibrous carbon from a catalytic decomposition of hydrocarbons. However, in these publications the carbon filaments which are produced based on short-chained carbohydrates are not further characterized with respect to their diameter.

The most common structure of carbon nano tubes is cylindrical, wherein the CNT may be either comprised of a single graphene layer (single-wall carbon nano tubes) or of a plurality of concentric graphene layers (multi-wall carbon nano tubes). Standard ways to produce such cylindrical CNTs are based on arch discharge, laser ablation, CVD and catalytic CVD processes. In the above mentioned article by Iijima (Nature 354, 56 – 58, 1991), the formation of CNTs having two or more graphene layers in the form of concentric seamless cylinders using the arch discharge method is described. Depending on a so-called "roll up vector", chiral and antichiral arrangements of the carbon atoms with respect to the CNT longitudinal axis are possible.

In an article by Bacon et. al., J. Appl. Phys. 34, 1960, 283 – 290, a different structure of CNT consisting of a single continuous rolled up graphene layer is described for the first time, which is usually referred to as the "scroll type". A similar structure comprised of a discontinuous graphene layer is known under the name "onion type" CNT. Such structures have later also been found by Zhou et. al, Science, 263, 1994, 1744 -1747 and by Lavin et. al., Carbon 40, 2002, 1123 – 1130.

As is well known, CNTs have truly remarkable characteristics with regard to electric conductivity, heat conductivity and strength. For example, CNTs have a hardness exceeding that of diamond and a tensile strength ten times higher than steel. Consequently, there has been a continuous effort to use CNTs as constituent in compound or composite materials such as ceramics, polymer materials or metals, trying to transfer some of these advantageous characteristics to the compound material.

From US 2007/0134496 A1, a method of producing a CNT dispersed composite material is known, in which a mixed powder of ceramics and metal and long-chain carbon nano tubes are kneaded and dispersed by a ball mill, and the dispersed material is sintered using discharge plasma. If aluminum is used for the metal, the preferred particle size is 50 to 150 µm.

A similar method in which carbon nano materials and metal powders are mixed and kneaded in a mechanical alloying process such as to produce a composite CNT metal powder is described in JP 2007 154 246 A.

Another related method of obtaining a metal-CNT-composite material is described in WO 2006/123 859 A1. Herein again, metal powder and CNTs are mixed in a ball mill at a milling speed of 300 rpm or more. One of the main objects of this prior art is to ensure a directionality of the CNTs in order to enhance the mechanical and electrical properties. According to this patent document, the directionality is imparted to the nano fibrils by application of a mechanical mass flowing process to the composite material with the nano fibrils uniformly dispersed in the metal, where the mass flowing process could for example be extrusion, rolling or injection of the composite material.

WO 2008/052 642 and WO 2009/010 297 of the present inventors disclose a further method of producing a composite material containing CNTs and a metal. Herein, the composite material is produced by mechanical alloying using a ball mill, where the balls are accelerated to very high velocities up to 11 m/s or even 14 m/s. The resulting composite material is characterized by a layered structure of alternating metal and CNT layers, where the individual layers of the metal material may be between 20 and 200,000 nm thick and the individual layers of the CNT may be between 20 and 50,000 nm thickness. The layer structure of this prior art is shown in Fig. 11a.

As is further shown in these patent documents, by introducing 6 % per weight CNTs in a pure aluminum matrix, the tensile strength, hardness and module of elasticity can be significantly increased as compared to pure aluminum. However, due to the layer structure, the mechanical properties are not isotropic.

In order to provide for a homogenous and isotropic distribution of CNTs, in JP 2009 03 00 90, yet an alternative way of forming the CNT metal compound material is proposed. According to this document, a metallic powder having an average primary particle size of 0,1 μm to 100 μm is immersed in a solution containing CNTs, and the CNTs are attached to the metal particles by hydrophilization, thereby forming a mesh-shaped coating film on top of the metal powder particles. The CNT coated metallic powder can then be further processed in a sintering process. Also, a stacked metal composite may be formed by stacking the coated metal composite on a substrate surface. The resultant composite is reported to have superior mechanical strength, electric conductivity and thermal conductivity.

As is apparent from the above discussion of the prior art, the same general idea of dispersing CNTs in metal can be put to practice in numerous different ways, and the resulting composite materials may have different mechanical, electrical and thermal conductivity properties.

It is to be further understood that the above referenced prior art is still practiced on a laboratory scale only, i.e. it remains yet to be shown what type of composites can eventually be produced on a large enough scale and under economically reasonable conditions to actually find use in industry. Further, while the mechanical properties of the compound materials as such have barely been examined, it remains to be shown how the composite materials behave under further processing into an article, and in particular, to what extent the beneficial properties of the composite material as a source material can be carried over to the finished article produced therefrom and be maintained under use of the article.

It is thus an object of the invention to provide a new composite material comprising a metal and nano particles having superior mechanical properties such as hardness, tensile strength and Young modulus, as well as a method for producing the same.

It is a further and equally important object of the invention to provide such a composite material which preserves the beneficial mechanical properties under further processing to a semi-manufactured or finished product, and which allows to preserve the beneficial properties while the product is in use. In this regard, it is of paramount importance that the compound material is heat-resisting, i.e. has a high-temperature stability. This will allow that the material can be manufactured with great precision and efficiency while preserving the advantageous mechanical properties, and that the finished product itself will have a high-temperature stability as well.

As regards the manufacturing method, a further object of the invention is to provide a method which allows for a simple and cost-efficient handling of the separate constituents as well as of the composite material while avoiding any health risks for persons involved in the production. Avoiding health or environmental risks is a key issue when it comes to large scale application in industry. In fact, if such environmental or health issues are not resolved, this will be prohibitive for any technologically relevant application of the composite material.

SUMMARY OF THE INVENTION

In order to meet the above objects, a method of producing a composite material comprising a metal and nano particles, in particular carbon nano tubes (CNT) is provided, in which a metal powder and the nano particles are processed by mechanical alloying, such as to form a composite comprising metal crystallites having an average size in the range of 1 nm to 100 nm, preferably 10 nm to 100 nm at least partly separated by said nano particles.

Accordingly, the composite material differs structurally from the composite of JP 2009 03 00 90 or US 2007/0134496 in that the metal crystallites are at least one order of magnitude smaller.

Also, the composite material of the invention differs from the materials of WO 2009/010297 A1 or WO 2008/052642 A1 of the same inventors in that in the present composite, very small independent metal crystallites of below 100 nm are formed and at least partly separated by nano particles inbetween, while according to the above patent documents the compound has a structure of alternating thin layers of metal and CNT, in which the in-plane extension of the metal layer however is way beyond 100 nm.

In the following, specific reference will be made to CNT as said nano particles for simplicity. It is however believed that similar effects could also be achieved when using other types of nano particles having a high aspect ratio, in particular inorganic nano particles such as carbides, nitrides and silicides. Thus, wherever applicable every disclosure made herein with respect to CNT is also contemplated with reference to other types of nano particles having a high aspect ratio, without further mention.

The structure of the new composite material has a new and surprising effect in that the micro structure of the metal crystallites is stabilized by the nano particles (CNT). In particular, it has been observed that due to an intimate engagement or interlocking of the nano scale metal crystallites and the CNT, dislocations in the metal can be stabilized by the CNT. This stabilization is possible due to the extremely high surface to volume ratio of the nano scale crystallites. Also, if alloys strengthened by solid-solution hardening are used as the metal constituents, the phases of the mixed crystal or solid solution can be stabilized by the engagement or interlocking with the CNT. Accordingly, this new effect which is observed to arise for metal crystallites below 100 nm in combination with uniformly and preferably isotropically dispersed CNT is called “nano-stabilization” or “nano-fixation” herein. A further aspect of the nano-stabilization is that the CNT suppress a grain growth of the metal crystallites.

While the nano-stabilization is of course a microscopical (or rather nanoscopical) effect, it allows to produce a compound material as an intermediate product and to further manufacture a finished product therefrom having unprecedented macroscopic mechanical properties, in particular with regard to the high-temperature stability. For example, it has been observed that due to the nano-stabilization of the nano crystallites by CNT, a dislocation density and an increased hardness associated therewith can be conserved at temperatures close to the melting point of some of the phases of the metal. This means that the compound material is applicable to hot working or extrusion methods at temperatures up to the melting point of some of the phases of the metal while preserving the mechanical strength and hardness of the compound. For example, if the metal is aluminum or an aluminum alloy, the person skilled in the art will appreciate that hot working would be an untypical way of processing it, since this would usually severely compromise the mechanical properties of the aluminum. However, due to the nano-stabilization described above, an increased Young modulus and hardness will be preserved even under hot working. By the same token, final products formed from the nano-stabilized compound as a source material can be used for high-temperature applications, such as engines or turbines, where light metals typically fail due to lack of high-temperature stability.

In some embodiments of the invention, the nano particles are not only partly separated from each other by the CNT, but some CNT are also contained or embedded in crystallites. One can think of this as a CNT sticking out like a "hair" from a crystallite. These embedded CNTs are believed to play an important role in preventing grain growth and internal relaxation, i.e. preventing a decrease of the dislocation density when energy is supplied in form of pressure and/or heat upon compacting the compound material.

Preferably, the metal of the compound is a light metal, and in particular, Al, Mg, Ti or an alloy including one or more of the same. Alternatively, the metal may be Cu or a Cu alloy. As regards aluminum as a metal component, the invention allows to circumvent many problems currently encountered with Al alloys. While high strength Al alloys are known, such as Al_{8xxx} based on Li, unfortunately, coating this alloy by anodic oxidation proves to be difficult. Also, if different Al alloys are combined, due to a different electro-chemical potential of the alloys involved, corrosion may occur in the contact region. On the other hand, while Al alloys of the series 1xxx, 3xxx and 5xxx based on solid-solution hardening can be coated by anodic oxidation, they have comparatively poor mechanical properties, a low temperature stability and can only be hardened to a quite narrow degree by cold working.

In contrast to this, if pure aluminum or an aluminum alloy forms the metal constituent of the composite material of the invention, an aluminum based composite material can be provided which due to the nano-stabilization effect has a strength and hardness comparable with or even beyond the highest strength aluminum alloy available today, which also has an increased high-temperature strength due to the nano-stabilization and is open for anodic oxidation. If a high-strength aluminum alloy is used as the metal of the composite of the invention, the strength of the compound can even be further raised. Also, by adequately adjusting the percentage of CNT in the composite, the mechanical properties can be adjusted to a desired value. Therefore, materials having the same metal component but different concentrations of CNT and thus different mechanical properties can be manufactured, which will have the same electro-chemical potential and therefore will not be prone to corrosion when connected with each other. This is different from prior art, where different alloys need to be used when different mechanical properties are needed, and where accordingly corrosion is always an issue when different alloys are brought in contact.

It has been found that the tensile strength and the hardness can be varied approximately proportionally with the content of CNT in the composite material. For light metals, such as aluminum, it has been found that the Vickers hardness increases nearly lineally with the CNT content. At a CNT content of about 9wt%, the composite material becomes extremely hard and brittle. Accordingly, depending on the desired mechanical properties, a CNT content from 0.5 to 10wt% will be preferable. In particular, a CNT content in the range of 5 to 9% is extremely useful as it allows to make composite materials of extraordinary strength in combination with the aforementioned advantages of nano-stabilization, in particular high-temperature stability.

A further problem arising in prior art is related to health risks encountered when handling CNTs. For example, in a report by Poland et. al., “Study on Potential Asbestos-like Effects of CNTs” (May 20, 2008, Nature Nano Technology) it has been demonstrated that long and stiff so called “rigid CNTs” due to their geometry and dimensions have similarly pathogenic effects as known from asbestos. According to a preferred embodiment, such type of health risks are avoided by providing the CNT in form of a powder of tangled CNT-agglomerates having a mean size sufficiently large to avoid health risks due to respirative dustiness. Herein, preferably at least 95% of the CNT-agglomerates have a particle size larger than 100 μm. Preferably, the mean diameter of the CNT-agglomerates is between 0.05 and 5 mm, preferably 0.1 and 2 mm and most preferably 0.2 and 1 mm.

Accordingly, the nano particles to be processed with the metal powder can be handled without any health risks. With the agglomerates being larger than 100 μm, they can be easily filtered by standard filters, and a low respirable dustiness in the sense of EN 15051-B is guaranteed. Further, the powder comprised of agglomerates of this large size has a pourability and flowability which allows an easy handling of the CNT source material.

While one might expect at first sight that it could be difficult to uniformly disperse the CNT on a nano scale while providing them in the form of highly entangled agglomerates on a millimetre scale, it has been confirmed by the inventors that a homogeneous and isotopic dispersion throughout the compound is in fact possible using mechanical alloying, which is a process of repeated deformation, fraction and welding of the metal and CNT particles. In fact, as will be explained below with reference to a preferred embodiment, the tangled structure and the use of large CNT-agglomerates even helps to preserve the integrity of the CNT upon the mechanical alloying at high kinetic energies.

Preferably, the CNTs have an average diameter on the same order of magnitude as the average size of the crystallite. In particular, the average diameter of the CNT and the crystallite size preferably differ by less than a factor of 4, preferably less than a factor of 2. Having the diameter of the CNT and the crystallites to be of the same order of magnitude has proven to enhance the above mentioned nano-stabilization. Preferably, the average diameter of the CNT is 3 to 100 nm, more preferably 5 – 80 nm and most preferably 6 – 60 nm.

Further, the length-to-diameter ratio of the CNT, also called aspect ratio, is preferably larger than 3, more preferably larger than 10 and most preferably larger than 30. A high aspect ratio of the CNT again assists in the nano-stabilization of the metal crystallites.

In an advantageous embodiment of the present invention, at least a fraction of the CNTs have a scrolled structure comprised of one or more rolled up graphite layers, each graphite layer consisting of two or more graphene layers on top of each other. This type of nano tubes has for the first time been described in DE 10 2007 044 031 A1 which has been published after the priority date of the present application. This new type of CNT structure is called a "multi-scroll" structure to distinguish it from "single-scroll" structures comprised of a single rolled-up graphene layer. The relationship between multi-scroll and single-scroll CNTs is therefore analogous to the relationship between single-wall and multi-wall cylindrical CNTs. The multi-scroll CNTs have a spiral shaped cross section and typically comprise 2 or 3 graphite layers with 6 to 12 graphene layers each.

The multi-scroll type CNTs have found to be extraordinarily suitable for the above mentioned nano-stabilization. One of the reasons is that the multi-scroll CNT have the tendency to not extend along a straight line but to have a curvy or kinky, multiply bent shape, which is also the reason why they tend to form large agglomerates of highly tangled CNTs. This tendency to form a curvy, bent and tangled structure facilitates the formation of a three-dimensional network interlocking with the crystallites and stabilizing them.

A further reason why the multi-scroll structure is so well suited for nano-stabilization is believed to be that the individual layers tend to fan out when the tube is bent like the pages of an open book, thus forming a rough structure for interlocking with the crystallites which in turn is believed to be one of the mechanisms for stabilization of defects.

Further, since the individual graphene and graphite layers of the multi-scroll CNT apparently are of continuous topology from the center of the CNT towards the circumference without any gaps, this again allows for a better and faster intercalation of further materials in the tube structure, since more open edges are available forming an entrance for intercalates as compared to single-scroll CNTs as described in Carbon 34, 1996, 1301 – 03, or as compared to CNTs having an onion type structure as described in Science 263, 1994, 1744 – 47.

In a preferred embodiment, at least a fraction of the nano particles are functionalized, in particular roughened prior to the mechanical alloying. When the nano particles are formed by multi-wall or multi-scroll CNTs, the roughening may be performed by causing at least the outermost layer of at least some of the CNTs to break by submitting the CNTs to high pressure, such as a pressure of 5 MPa or higher, preferably 7.8 MPa or higher, as will be explained below with reference to a specific embodiment. Due to the roughening of the nano particles, the interlocking effect with the metal crystallites and thus the nano-stabilization is further increased.

In a preferred embodiment, the processing is conducted such as to increase and stabilize the dislocation density of the crystallites by the nanoparticles sufficiently to increase the average Vickers hardness of the composite material to exceed the Vickers hardness of the original metal by 40% or more, preferably by 80% or more.

In a preferred embodiment, the metal is formed by an aluminum alloy and the processing is conducted such as to raise the average Vickers hardness of the composite particles to 250 HV or more in case of Al_{2xxx}, 270 HV or more in case of Al_{7xxx} and/or 390 HV or more in case of Al_{5xxx}. Also, the processing is conducted such as to stabilize the dislocations and suppress the grain growth sufficiently such that the Vickers hardness of a solid material formed by compacting the composite powder is higher than the Vickers hardness of the original metal, preferably higher than 80% of the Vickers hardness of the composite powder.

The high dislocation density is preferably generated by causing numerous high kinetic energy impacts of balls of a ball mill. Preferably, in the ball mill the balls are accelerated to a speed of at least 8 m/s, preferably at least 11 m/s. The balls may interact with the processed material by shear forces, friction and collision forces, but the relative contribution of collisions to the total mechanical energy transferred to the material by plastic deformation increases with increasing kinetic energy of the balls. Accordingly, a high velocity of the balls is preferred for causing a high rate of kinetic energy impacts which in turn causes a high dislocation density in the crystallites.

Preferably, the milling chamber of ball mill is stationary and the balls are accelerated by a rotary motion of a rotating element. This design allows to easily and efficiently accelerate the balls to the above mentioned velocities of 8 m/s, 11 m/s or even higher, by driving the rotating element at a sufficient rotary frequency such that the tips thereof are moved at the above mentioned velocities. This is different from, for example, ordinary ball mills having a rotating drum or planetary ball mills, where the maximum speed of the balls is typically 5 m/s only. Also, the design employing a stationary milling chamber and a driven rotating element is easily scaleable, meaning that the same design can be used for ball mills of very different sizes, from laboratory type mill up to mills for high throughput mechanical alloying on an industrial scale.

Preferably, the axis of the rotary element is oriented horizontally, such that the influence of gravity on both, the balls and the processed material, is reduced to a minimum.

In a preferred embodiment, the balls have a small diameter of 3 to 8 mm, preferably 4 to 6 mm. At this small ball diameters, the contact zones between the balls are nearly point shaped thus leading to very high deformation pressures, which in turn facilitates the formation of a high dislocation density in the metal.

The preferred material of the balls is steel, ZiO_2 or yttria stabilized ZiO_2.

The quality of the mechanical alloying will also depend on the filling degree of the milling chamber with the balls as well as on the ratio of balls and processed material. Good mechanical alloying results can be achieved if the volume occupied by the balls roughly corresponds to the volume of the chamber not reached by the rotating element. Thus, the filing degree of the balls is preferably chosen such that the volume V_b occupied by the balls corresponds to $V_b = V_c - \pi \cdot (r_R)^2 \cdot l \pm 20\%$, wherein V_c is the volume of the milling chamber, r_R is the radius of the rotating element and l is the length of the milling chamber in axial direction of the rotor. Also, the ratio of the processed material, i.e. (metal + nano particles) / balls by weight is preferably between 1:7 and 1:13.

While milling with high kinetic energy is advantageous with regard to increasing the dislocation density in the metal crystallites, high kinetic energies in practice lead to two severe problems. The first problem is that many metals due to their ductility will tend to stick to the balls, the chamber walls or the rotating element and thus not be processed further. This is especially true for light metals such as Al. Consequently, the part of the material that is not completely processed will not have the desired quality of the nano-stabilized CNT-metal composite, and the quality of products formed therefrom may be locally deficient, which may lead to breakage or failure of the finished article. Accordingly, it is of high importance that all of the material is completely and uniformly processed.

The second problem encountered when processing at high kinetic energies is that the CNT may be worn down or destroyed to an extent that the interlocking effect with the metal crystallites, i.e. the nano-stabilization no longer occurs.

To overcome these problems, in a preferred embodiment of the invention, the processing of the metal and the CNTs comprises a first and a second stage, wherein in the first processing stage most or all of the metal is processed and in the second stage CNTs are added and the metal and the CNTs are simultaneously processed. Accordingly, in the first stage, the metal can be milled down at high kinetic energy to a crystallite size of 100 nm or below before the CNTs are added, such as to not wear down the CNT in this milling stage. Accordingly, the first stage is conducted for a time suitable to generate metal crystallites having an average size in a range of 1 to 100 nm, which in one embodiment was found to be a time of 20 to 60 minutes. The second stage is then conducted for a time sufficient to cause a stabilization of the nanostructure of the crystallites, which may typically take 5 to 30 min only. This short time of the second stage is sufficient to perform mechanical alloying of the CNT and the metal and to thereby homogeneously disperse the CNT throughout the metal matrix, while not yet destroying too much of the CNT.

In order to avoid sticking of the metal during the first stage, it has proven to be very efficient to add some CNTs already during the first stage which may then serve as a milling agent preventing sticking of the metal component. This fraction of the CNT will be sacrificed, as it will be completely milled down and will not have any noticeable nano-stabilizing effect. Accordingly, the fraction of CNT added in the first stage will be kept as small as possible as long as it prevents sticking of the metal constituent.

In a further preferred embodiment, during the processing, the rotation speed of the rotating element is cyclically raised and lowered. This technique is for example described in DE 196 35 500 and referred to as "cycle operation". It has been found that by conducting the processing with alternating cycles of higher and lower rotational speeds of the rotating element, sticking of the material during processing can be very efficiently be prevented. The cycle operation, which is per se known for example from the above referenced patent has proven to be very useful for the specific application of mechanical alloying of a metal and CNTs.

In a preferred embodiment, the method comprises also the manufacturing of CNTs in the form of CNT powder. The method comprises a step of producing the CNT powder by catalytic carbon vapor deposition using one or more of a group consisting of acetylene, methane, ethane, ethylene, butane, butene, butadylene, and benzene as a carbon donor. Preferably, the catalyst comprises two or more elements of a group consisting of Fe, Co, Mn, Mo and Ni. It has been found that with these catalysts, CNTs can be formed at high yield, allowing a production on an industrial scale. Preferably, the step of producing the CNT powder comprises a step of catalytic decomposition of C_1-C_3-carbo hydrogens at 500°C to 1000°C using a catalyst comprising Mn and Co in a molaric ratio in a range of 2:3 to 3:2. With this choice of catalyst, temperature and carbon donor, CNTs can be produced at high yield and in particular, in the shape of large agglomerates and with the preferred multi-scroll morphology.

BRIEF DESCRIPTION OF THE FIGURES

Fig. 1	is a schematic diagram illustrating the production setup for high quality CNTs.
Fig.2	is a sketch schematically showing the generation of CNT-agglomerates from agglomerated primary catalyst particles.
Fig. 3	is an SEM picture of a CNT-agglomerate.
Fig. 4	is a close-up view of the CNT-agglomerate of Fig. 3 showing highly entangled CNTs.
Fig. 5	is a graph showing the size distribution of CNT-agglomerates obtained with a production setup shown in Fig. 1
Fig. 6a	is an SEM image of CNT-agglomerates prior to functionalization.
Fig. 6b	is an SEM image of the same CNT-agglomerates after functionalization.
Fig. 6c	is a TEM image showing a single CNT after functionalization.
Fig. 7	is a schematic diagram showing a setup for spray atomization of liquid alloys into an inert atmosphere.
Figs. 8a and 8b	show sectional side and end views respectively of a ball mill designed for high energy milling.
Fig. 9	is a conceptional diagram showing the mechanism of mechanical alloying by high energy milling.
Fig. 10	is a diagram showing the rotational frequency of the HEM rotor versus time in a cyclic operation mode.
Fig. 11a	shows the nano structure of a compound of the invention in a section through a compound particle.

Fig. 11b	shows, in comparison to Fig. 11a, a similar sectional view for the compound material as known from WO 2008/052642 A1 and WO 2009/010297 A1.
Fig. 12	shows an SEM image of the composite material according to an embodiment of the invention in which CNTs are embedded in metal crystallites.

DESCRIPTION OF A PREFERRED EMBODIMENT

For the purposes of promoting an understanding of the principles of the invention, reference will now be made to the preferred embodiment illustrated in the drawings and specific language will be used to describe the same. It will, nevertheless, be understood that no limitation of the scope of the invention is thereby intended, such alterations and further modifications in the illustrated product, method and use and such further applications of the principles of the invention as illustrated therein being contemplated as would normally occur now or in the future to one skilled in the art to which the invention relates.

In the following, a processing strategy for producing constituent materials and for producing a composite material from the constituent materials will be explained. Also, exemplary use of the composite material in different ways of compacting will be discussed.

In the preferred embodiment, the processing strategy comprises the following steps:

1.) production of high quality CNTs,
2.) functionalization of the CNTs,
3.) spray atomisation of liquid metal or alloys into inert atmosphere,
4.) high energy milling of metal powders,
5.) mechanical dispersion of CNTs in the metal by mechanical alloying,
6.) compacting of metal-CNT composite powders, and
7.) further processing of compacted samples.

It is to be understood that the first five steps represent an embodiment of the production method according to an embodiment of the invention, in which a composite material according to an embodiment of the invention is obtained. The last two processing steps refer to an exemplary use of the composite material according to an embodiment of the invention.

1. PRODUCTION OF HIGH QUALITY CNTS

In Fig. 1, a setup 10 for producing high quality CNTs by catalytic CVD in a fluidized bed reactor 12 is shown. The reactor 12 is heated by heating means 14. The reactor 12 has a lower entrance 16 for introducing inert gases and reactant gases, an upper discharge opening 18 for discharging nitrogen, inert gas and by-products from the reactor 12, a catalyst entrance 20 for introducing a catalyst and a CNT discharge opening 22 for discharging CNTs formed in the reactor 12.

In a preferred embodiment, CNTs of the multi-scroll type are produced by a method as known from DE 10 2007 044 031 A1, which has been published after the priority date of the present application and the whole content of which is hereby included in the present application by reference.

First, nitrogen as an inert gas is introduced in the lower entrance 16 while the reactor 12 is heated by heating means 14 to a temperature of 650°C.

Next, a catalyst is introduced through catalyst entrance 20. Herein, the catalyst is preferably a transition metal catalyst based on Co and Mn, wherein the molaric ratio of Co and Mn with respect to each other is between 2:3 and 3:2.

Next, a reactant gas is introduced at the lower entrance 16, comprising a hydrocarbon gas as a carbon donor and an inert gas. Herein, the hydrocarbon gas preferably comprises C_1-C_3-carbo-hydrogens. The ratio of reactant and inert gas may be about 9:1.

Carbon deposited in form of CNT is discharged at the CNT discharge opening 22.

The catalyst material is typically milled to a size of 30 to 100 µm. As is shown in schematically in Fig. 2, a number of primary catalyst particles may agglomerate and carbon is deposited by CVD on the catalyst particle surfaces such that CNTs are grown. According to the preferred production method of the invention, the CNT form agglomerates of long entangled fibres upon growth, as is schematically shown in the right half of Fig. 2. At least part of the catalyst will remain in the CNT-agglomerate. However, due to the very rapid and efficient growth of the CNT, the catalyst content in the agglomerates will become negligible, as the carbon content of the agglomerates may eventually be higher than 95%, in some embodiments even higher than 99%.

In Fig. 3, an SEM image of a CNT-agglomerate thus formed is shown. The agglomerate is very large by "nano-standards", having a diameter of more than 1 mm. Fig. 4 shows an enlarged image of the CNT-agglomerate, in which a multitude of highly entangled CNTs with a large length to diameter ratio can be seen. As can be seen from Fig. 4, the CNTs have a "curly" or "kinky" shape, as each CNT has only comparatively short straight sections with numerous bends and curves inbetween. It is believed that this curliness or kinkiness is related to the peculiar structure of the CNTs, which is called the "multi-scroll structure" herein. The multi-scroll structure is a structure comprised of one or more rolled up graphite layers, where each graphite layer consists of two or more graphene layers on top of each other. This structure has for the first time been reported in DE 10 2007 044 031 A1 published after the priority date of the present application.

The below Table 1 summarizes the characteristic properties of high purity multi-scroll CNT that have been produced with the setup of Fig. 1.

Properties	**Value**	**Unit**	**Method**
C-Purity	>95	wt%	ashing
Free amorphous carbon	-	wt%	TEM
Outer mean diameter	~13	nm	TEM
Inner mean diameter	~4	nm	TEM
Length	1 - >10	µm	SEM
Bulk density	130 - 150	kg/m^3	EN ISO 60

Table 1

It is noted that the CNTs have a considerably high C-purity of more than 95wt%. Also, the average outer diameter is only 13 nm at a length of 1 to 10 µm, i.e. the CNTs have a very high aspect ratio. A further remarkable property is the high bulk density being in a range of 130 to 150 kg/m^3. This high bulk density greatly facilitates the handling of the CNT-agglomerate powder, and allows easy pouring and efficient storing thereof. This is of great importance when it comes to application of the composite material of the invention on an industrial scale.

The CNT-agglomerates with the properties of Table 1 can be produced rapidly and efficiently with a high throughput. Even today the applicant already has the capacity to produce 60 tons of this type of CNT-agglomerates per year.

Table 2 summarizes the same properties for a very high purity CNT-agglomerate which the applicant is also able to produce, although at a lower capacity.

Properties	**Value**	**Unit**	**Method**
C-Purity	>99	wt%	ashing
Free amorphous carbon	-	wt%	TEM
Outer mean diameter	~13	nm	TEM
Inner mean diameter	~4	nm	TEM
Length	1 - >10	µm	SEM
Bulk density	140 - 230	kg/m^3	EN ISO 60

Table 2

Fig. 5 shows a graph of the particle-size distribution of the CNT-agglomerates. The abscissa represents the particle size in µm, while the ordinate represents the cumulative volumetric content. As can be seen from the diagram in Fig. 5, almost all of the CNT-agglomerates have a size larger than 100 µm. This means that practically all of the CNT-agglomerates can be filtered by standard filters, and consequently, the CNT-agglomerates are considered to have a low respirable dustiness under EN 15051-B. Thus, the extraordinarily large CNT-agglomerates used in the preferred embodiment of the invention allow for a safe and easy handling of the CNT, which again is of highest importance when it comes to transferring the technology from the laboratory to the industrial scale. Also, due to the large CNT-agglomerate size, the CNT powder has a good pourability, which also greatly facilitates the handling. Thus, the CNT-agglomerates allow to combine macroscopic handling properties with nanoscopic material characteristics.

2. FUNCTIONALIZATION OF CNT

In a preferred embodiment, the CNTs are functionalized prior to performing the mechanical alloying. The purpose of the functionalizing is to treat the CNTs such that the nano-stabilization of the metal crystallites in the composite material will be enhanced. In the preferred embodiment, this functionalization is achieved by roughening the surface of at least some of the CNTs.

Herein, the CNT-agglomerates as shown in Fig. 6a are submitted to a high pressure of 100 kg/cm^2 (9.8 MPa). Upon exerting this pressure, as is shown in Fig. 6b, the agglomerate structure as such is preserved, i.e. the functionalized CNTs are still present in the form of agglomerates preserving the aforementioned advantages with respect to low respirable dustiness and easier handling. Also, it is found that while the CNT retain the same inner structure, the outermost layer or layers burst or break, thereby developing a rough surface, as is shown in Fig. 6c. With the rough surface, the interlocking effect between CNT and crystallites is increased, which in turn increases the nano-stabilization effect.

3. METAL POWDER GENERATION THROUGH ATOMIZATION

In Fig. 7, a setup 24 for generating a metal powder through atomization is shown. The setup 24 comprises a vessel 26 with heating means 28 in which a metal or metal alloy to be used as a constituent of the composite of the invention is melted. The liquid metal or alloy is poured into a chamber 30 and forced by argon driving gas, represented by an arrow 32 through a nozzle assembly 34 into a chamber 36 containing an inert gas. In the chamber 36, the liquid metal spray leaving the nozzle assembly 34 is quenched by an argon quenching gas 38, so that the metal droplets are rapidly solidified and form a metal powder 40 piling up on the floor of chamber 36. This powder forms the metal constituent of the composite material of the invention.

4. HIGH ENERGY MILLING OF METAL POWDERS AND MECHANICAL DISPERSION OF CNT IN METAL

In order to form the composite material from the CNT produced as described in section 1 and functionalized as described in section 2 and from the metal powder produced as described in section 3, the CNTs need to be dispersed within the metal. In the preferred embodiment, this is achieved by a mechanical alloying carried out in a high energy mill 42, which is shown in a sectional side view in Fig. 8a and a sectional end view in Fig. 8b. The high energy mill 42 comprises a milling chamber 44 in which a rotating element 46 having a number of rotating arms 48 is arranged such that the rotary axis extends horizontally. While this is not shown in the schematic view of Fig. 8, the rotating element 46 is connected to a driving means such as to be driven at a rotational frequency of up to 1,500 RPM or even higher. In particular, the rotating element 46 can be driven at a rotational speed so that the radially outward lying tips of each arm 48 acquire a velocity of at least 8 m/s, preferably more than 11 m/s with respect to the milling chamber 44, which itself remains stationary. Although not shown in Fig. 8, a multitude of balls are provided in the milling chamber 44 as milling members. A close-up look of two balls 50 is shown in Fig. 9 to be described in more detail below. In the present example, the balls are made from steel and have a diameter of 5,1 mm. Alternatively, the balls 50 could be made from ZiO_2 or yttria stabilized said ZiO_2.

The filling degree of the balls within the high energy mill 42 is chosen such that the volume occupied by the balls corresponds to the volume of the milling chamber 44 that lies outside the cylindrical volume that can be reached by the rotating arms 48. In other words, the volume V_b occupied by the balls corresponds to $V_b = V_c - \pi \cdot (r_R)^2 \cdot l$, wherein V_c is the volume of the milling chamber 44, r_R is the radius of the rotating arms 48 and r is the length of the milling chamber 44 in axial direction. Similar high energy ball mills are disclosed in DE 196 35 500, DE 43 07 083 and DE 195 04 540 A1.

The principle of mechanical alloying is explained with reference to Fig. 9. Mechanical alloying is a process where powder particles 52 are treated by repeated deformation, fracture and welding by highly energetic collisions of grinding balls 50. In the course of the mechanical alloying, the CNT-agglomerates are deconstructed and the metal powder particles are fragmentized, and by this process, single CNTs are dispersed in the metal matrix. Since the kinetic energy of the balls depends quadratically on the velocity, it is a primary object to accelerate the balls to very high velocities of 10 m/s or even above. The inventors have analyzed the kinetics of the balls using high speed stroboscopic cinematopography and could confirm that the maximum relative velocity of the balls corresponds approximately to the maximum velocity of the tips of the rotating arms 48.

While in all types of ball mills the processed media are subjected to collision forces, shear forces and frictional forces, at higher kinetic energies the relative amount of energy transferred by collision increases. In the framework of the present invention, it is preferred that from the total mechanical work applied to the processed media, the relative contribution of collisions is as high as possible. For this reason, the high energy ball mill 42 shown in Fig. 8 is advantageous over ordinary drum-ball mills, planetary ball mills or attritors since the kinetic energy of the balls that can be reached is higher. For example, in a planetary ball mill or in an attritor, the maximum relative velocity of the balls is typically 5 m/s or below. In a drum-ball mill, where the balls are set in motion by rotation of the milling chamber, the maximum velocity of the balls will depend both on the rotational velocity and the size of the milling chamber. At low rotational speeds, the balls are moved in the so called “cascade mode”, in which the frictional and shear forces dominate. At higher rotational frequencies, the ball motion enters the so called “cataract mode”, in which the balls are accelerated due to gravity in a free fall mode, and accordingly, the maximum velocity will depend on the diameter of the ball mill. However, even for the largest drum-ball mills available, the maximum velocity will hardly surpass 7 m/s. Accordingly, the HEM design with a stationary milling chamber 44 and a driven rotating element 46 as shown in Fig. 8 is preferred.

When processing the metal powder at high kinetic energies, this has two effects that are connected with the strengthening of the composite material. The first effect is a decrease of crystallite size. According to the Hall-Petch equation, the yield stress σ_y increases inversely proportional with the square root of the crystallite diameter d, i.e. $\sigma_y = \sigma_o + \frac{K_y}{\sqrt{d}}$, wherein K_y is a material constant and σ_0 is the yield stress of the perfect crystal, or in other words, the resistance of the perfect crystal to dislocation motion. Accordingly, by decreasing the crystallite size, the material strength can be increased.

The second effect on the metal due to high energy collision is a work hardening effect due to an increase of dislocation density in the crystallites. The dislocations accumulate, interact with each other and serve as pinning points or obstacles that significantly impede their motion. This again leads to an increase in the yield strength σ_y of the material and a subsequent decrease in ductility.

Mathematically, the correlation between yield strength σ_y and dislocation density ρ can be expressed as follows: $\sigma_y = G \cdot \alpha \cdot b \cdot \sqrt{\rho}$,

where G is the shear modulus, b is the Burger's vector and α is a material specific constant.

However, many metals, in particular light metals such as aluminum have a fairly high ductility which makes processing by high energy milling difficult. Due to the high ductility, the metal may tend to stick at the inside wall of the milling chamber 44 or the rotating element 46 and may thereby not be completely milled. Such sticking can be counteracted by using milling aids such as stearin acids or the like. In WO 2009/010297 by the same inventors, it was explained that the CNT itself may act as a milling agent which avoids sticking of the metal powder. However, when the metal powder and the CNT are milled simultaneously at sufficient energy and for a sufficient duration such as to decrease the metal crystallite size to 100 nm or below, the CNT will tend to be damaged to a degree that the envisaged nano-stabilization is greatly compromised.

According to a preferred embodiment, the high energy milling is therefore conducted in two stages. In a first stage, the metal powder and only a fraction of the CNT powder are processed. This first stage is conducted for a time suitable to generate metal crystallites having an average size below 100 nm, typically for 20 to 60 min. In this first stage, a minimum amount of CNT is added that will allow to prevent sticking of the metal. This CNT is sacrificed as a milling agent, i.e. it will not have a significant nano-stabilizing effect in the final composite material.

In a second stage, the remaining CNT is added and the mechanical alloying of the CNTs and the metal is performed. In this stage, the microscopic agglomerates as shown in Fig. 3 and Fig. 6b need to be decomposed into single CNTs which are dispersed in the metal matrix by mechanical alloying. In experiments, it has been confirmed that it is in fact easily possible to deconstruct the CNT alloy by high energy milling, which would be difficult to achieve in alternative dispersion methods. Also, it has been observed that the integrity of the CNTs added during the second stage in the metal matrix is very good, thus allowing for the nano-stabilization effect. As regards the integrity of the disentangled CNTs in the metal matrix, it is believed that using agglomerates of larger size is even advantageous, since the CNTs inside the agglomerates are to a certain extent protected by the outside CNTs.

Further, in the first stage the rotational speed of the rotational element 46 is preferably cyclically raised and lowered as is shown in the timing diagram of Fig. 10. As is seen in Fig. 10, the rotating speed is controlled in alternating cycles, namely a high speed cycle at 1,500 rpm for the duration of 4 min and a low speed cycle at 800 rpm for a duration of one minute. This cyclic modulation of rotating speed is found to impede sticking. Such cycle operation has already been described in DE 196 35 500 and has been successfully applied in the framework of the present invention.

By the above described process, a powder composite material can be obtained in which metal crystallites having a high dislocation density and a mean size below 100 nm are at least partially separated and micro-stabilized by homogeneously distributed CNTs. Fig. 11a shows a cut through a composite material particle according to an embodiment of the invention. In Fig. 11a, the metal constituent is aluminum and the CNTs are of the multi-scroll type obtained in a process as described in section 1 above. As can be seen from Fig. 11a, the composite material is characterized by an isotropic distribution of nanoscopic metal crystallites located in a CNT mesh structure. In contrast to this, the composite material of WO 2008/052642 shown in Fig. 11b has a non-isotropic layer structure, leading to non-isotropic mechanical properties.

Fig. 12 shows an SEM image of a composite material comprised of aluminum with CNT dispersed therein. At locations denoted with number ①, examples of CNT extending along a boundary of crystallites can be seen. The CNTs separate individual crystallites from each other and thereby effectively suppress grain growth of the crystallites and stabilize the dislocation density. At locations marked with reference signs ②, CNTs can be seen which are contained or embedded within a nanocrystallite and stick out from the nanocrystallite surface like a “hair”. It is believed that these CNTs have been pressed into the metal crystallites like needles in the course of the high energy milling described above. It is believed that these CNTs embedded or contained within individual crystallites play an important role in the nano-stabilization effect, which in turn is responsible for the superior mechanical properties of the composite material and of compacted articles formed thereby.

In the preferred embodiment, the composite powder is subjected to a passivation treatment in a passivation vessel (not shown). In this passivation, the finished composite powder is discharged from the milling chamber 42, while still under vacuum or in an inert gas atmosphere and is discharged into the passivation vessel. In the passivation vessel, the composite material is slowly stirred, and oxygen is gradually added such as to slowly oxidize the composite powder. The slower this passivation is conducted, the lower is the total oxygen uptake of the composite powder.

Passivation of the powder again facilitates the handling of the powder as a source material for fabrication of manufactured or semi-finished articles on an industrial scale.

5. COMPACTING OF THE COMPOSITE MATERIAL POWDER

The composite material powder can be used as a source material for forming semi-finished or finished articles by powder metallurgic methods. In particular, it has been found that the powder material of the invention can very advantageously be further processed by cold isostatic pressing (CIP) and hot isostatic pressing (HIP). Alternatively, the composite material can be further processed by hot working, powder milling or powder extrusion at high temperatures up to the melting temperature of some of the metal phases. It has been observed that due to the nano-stabilizing effect of the CNT, the viscosity of the composite material even at high temperatures is increased such that the composite material may be processed by powder extrusion or flow pressing. Also, the powder can be directly processed by continuous powder rolling.

It is a remarkable advantage of the composite material of the invention that the beneficial mechanical properties of the powder particles can be maintained in the compacted finished or semi-finished article. For example, when using multi-scroll CNT and Al_{5xxx}, by employing a mechanical alloying process as described in section 4 above, a composite material having a Vickers hardness of more than 390 HV was obtained. Remarkably, even after compacting the powder material to a finished or semi-finished product, the Vickers hardness remains at more than 80% of this value. In other words, due to the stabilizing nano structure, the hardness of the individual composite powder particles can largely be transferred to the compacted article. Prior to this invention, such a hardness in the compacted article was not possible.

Although a preferred exemplary embodiment is shown and specified in detail in the drawings and the preceding specification, these should be viewed as purely exemplary and not as limiting the invention. It is noted in this regard that only the preferred exemplary embodiment is shown and specified, and all variations and modifications should be protected that presently or in the future lie within the scope of protection of the appending claims.

Reference Signs

10	catalytic CVD apparatus
12	fluidized bed reactor
14	heating means
16	lower entrance
18	upper discharge opening
20	catalyst entrance
22	discharge opening
24	setup for generating a metal powder through atomization
26	vessel
28	heating means
30	chamber
32	argon driving gas
34	nozzle assembly
36	chamber
38	argon quenching gas
40	metal powder
42	high energy mill
44	milling chamber
46	rotating element
48	arm of rotating element 46
50	milling ball

Claims

1. A method of producing a composite material comprising a metal and nano particles, in particular carbon nano tubes (CNT), comprising the steps of:

   processing metal powder and said nano particles by mechanical alloying, such as to form a composite comprising metal crystallites having an average size in the range of 1 nm to 100 nm, preferably 10 nm to 100 nm at least partly separated from each other by said nano particles.

2. The method of claim 1, wherein the metal powder and the nanoparticles are processed such that nanoparticles are also contained in at least some of the crystallites.

3. The method of claim 1, wherein said metal is a light metal, in particular Al, Mg, Ti or an alloy including one or more of the same, Cu or a Cu alloy.

4. The method of claims 1 or 2, wherein said nano particles are formed by carbon nano tubes (CNT) provided in form of a powder of tangled CNT agglomerates having a mean size sufficiently large to avoid health risks due to respirative dustiness.

5. The method of claim 4, wherein at least 95 % of the CNT agglomerates have a particle size larger than 100 μm.

6. The method of claims 4 or 5, wherein the mean diameter of the CNT agglomerates is between 0.05 and 5 mm, preferably between 0.1 and 2 mm and most preferably between 0.2 and 1 mm.

7. The method of one of the preceding claims, wherein the nano particles, in particular CNTs, have an average diameter on the same order of magnitude as the average size of the crystallites.

8. The method of claim 7, wherein the average diameter of the nano particles, in particular CNTs, and the crystallites differ by less than a factor of 4, preferably less than a factor of 2.

9. The method of one of the preceding claims, wherein the average diameter of the nano particles, in particular CNTs, is 3 to 100 nm, preferably 5 to 80 nm and most preferably 6 to 60 nm.

10. The method of one of the preceding claims, wherein the length to diameter ratio of the nano particles, in particular CNTs, is larger than 3, preferably larger than 10 and most preferably larger than 30.

11. The method of one of the preceding claims, wherein the CNT content of the composite material by weight is in a range of 0.5 to 10%, preferably 3 to 9% and most preferably 5 to 9%.

12. The method of one of the preceding claims, wherein the nano particles are formed by CNTs, at least a fraction of which having a scrolled structure, comprised of one or more rolled up graphite layers, each graphite layer consisting of two or more graphene layers on top of each other.

13. The method of one of the preceding claims, comprising a step of functionalizing, in particular roughening at least a fraction of the nano particles prior to the mechanical alloying.

14. The method of claim 13, wherein the nano particles are formed by multi-wall or multi-scroll CNTs and the roughening is performed by causing at least the outermost layer of at least some of the CNTs to break by submitting the CNTs to high pressure, in particular, a pressure of 5 MPa or higher, preferably 7.8 MPa or higher.

15. The method of one of the preceding claims, wherein the processing is conducted such as to increase and stabilize the dislocation density of the crystallites by the nanoparticles sufficiently to increase the average Vickers hardness of the composite material

and/or of a solid material formed by compacting the same to exceed the Vickers hardness of the original metal by 40% or more, preferably by 80% or more.

16. The method of one of the preceding claims, wherein the metal is formed by an Al alloy and in which the processing is conducted such as to raise the average Vickers hardness of the composite particles to 250 HV or more in case of Al_{2xxx}, and/or 270 HV or more in case of Al_{7xxx}, and/or 390 HV or more in case of Al_{5xxx}.

17. The method of claim 16, wherein the processing is conducted such as to stabilize the dislocations and suppress grain growth sufficiently such that the Vickers hardness of a solid material formed by compacting the composite powder is higher than the Vickers hardness of the original metal, preferably higher than 80% of the Vickers hardness of the composite powder.

18. The method of one of the preceding claims, wherein the mechanical alloying is performed using a ball mill (42) comprising a milling chamber (44) and balls (50) as milling members.

19. The method of claim 18, wherein the balls (50) are accelerated to a speed of at least 5 m/s, preferably at least 8 m/s and most preferably at least 11 m/s.

20. The method of claim 18 or 19, wherein the milling chamber (44) is stationary and the balls (50) are accelerated by a rotary motion of a rotating element (46).

21. The method of claim 20, wherein an axis of said rotating element (46) is oriented horizontally.

22. The method of one of claims 18 to 21, wherein said balls (50) have a diameter of 3 to 8 mm, preferably 3 to 6 mm and/or are made from steel, ZiO_2 or yttria stabilized ZrO_2.

23. The method of one of claims 18 to 22, wherein the volume V_b occupied by the balls (50) corresponds to $V_b = V_c - \pi \cdot (r_R)^2 \cdot l \pm 20\%$, wherein

V_c is the volume of the milling chamber (44), r_R is the radius of the rotating element (46) and l is the length of the milling chamber (44) in axial direction of the rotating element (46).

24. The method of one of claims 18 to 23, wherein an inert gas, in particular Ar, He or N_2 or a vacuum environment is provided inside the milling chamber (44).

25. The method of one of claims 18 to 24, wherein the ratio of (metal + nano particles)-to-balls by weight is between 1:7 and 1:13.

26. The method of one of the preceding claims, wherein said processing of metal powder and nano particles comprises a first and a second processing stage,

wherein in the first processing stage, most or all of the metal is processed, and

in the second stage, nano particles, in particular CNTs are added and the metal and the nano particles are simultaneously processed.

27. The method of claim 26, wherein a fraction of the nano particles is already added in the first processing stage to avoid sticking of the metal.

28. The method of one of claims 26 and 27, wherein the first stage is conducted for a time suitable to generate metal crystallites having an average size below 100 nm, and in particular for 20 to 60 min.

29. The method of one of claims 26 to 28, wherein the second stage is conducted for a time sufficient to cause a stabilization of the micro structure of the crystallites by the nano particles, and in particular for 5 to 30 min.

30. The method of one of claims 26 to 29, wherein the second stage is shorter than the first stage.

31. The method of one of claims 20 to 30, wherein during the processing, the rotational speed of the rotating element (46) is cyclically raised and lowered.

32. The method of one of the preceding claims, wherein said nano particles are formed by CNTs provided in the form of a CNT powder, said method further comprising a step of producing said CNT powder by catalytic carbon vapour deposition using one or more of a group consisting of acetylene, methane, ethane, ethylene, butane, butene, butadiene, and benzene as a carbon donor.

33. The method claim 32, wherein the catalyst comprises two or more elements of a group consisting of Fe, Co, Mn, Mo and Ni.

34. The method of one of claims 32 and 33, wherein said step of producing the CNT powder comprises a step of catalytic decomposition of C_1-C_3-carbohydrogens at 500°C to 1000°C using a catalyst comprising Mn and Co in a molaric ratio in a range of 2:3 to 3:2.

35. The method of one of the preceding claims, further comprising a step of forming a metal powder as the metal constituent of the composite material by spray atomization of a liquid metal or alloy into an inert atmosphere.

36. The method of one of the preceding claims, further comprising a step of passivating the finished composite material.

37. The method of claim 36, wherein the composite material is loaded into a passivation chamber and stirred therein while oxygen is gradually added such as to oxidize the composite material.

38. A composite material comprising metal crystallites and nano particles, wherein the metal crystallites have an average size in the range of 1 nm to 100 nm, preferably 10 nm to 100 nm and are at least partially separated from each other by said nano particles.

39. The composite material of claim 38, wherein nanoparticles are also contained in at least some of the crystallites.

40. The composite material of claim 38 or 39, wherein the metal is a light metal, in particular Al, Mg, Ti or an alloy including one or more of the same, Cu or a Cu alloy.

41. The composite material of one of claims 38 to 40, wherein the nano particles, in particular CNTs have an average diameter on the same order of magnitude as the average size of the crystallites.

42. The composite material of claim 41, wherein the average diameter of the nano particles, in particular CNTs, and the crystallites differ by less than a factor of 4, preferably less than a factor of 2.

43. The composite material of one of claims 38 to 42, wherein the average diameter of the nano particles, in particular CNTs is 3 to 100 nm, preferably 5 to 80 nm and most preferably 6 to 60 nm.

44. The composite material of one of claims 38 to 43, wherein the CNT content of the composite material by weight is in the range of 0.5 to 10%, preferably 3 to 9% and most preferably 5 to 9%.

45. The composite material of one of claims 38 to 44, wherein the nano particles are formed by CNTs, at least a fraction of which having a scroll structure comprised of one or more rolled up graphite layers, each graphite layer consisting of two or more graphene layers on top of each other.

46. The composite material of one of claims 38 to 45, wherein at least a fraction of the nano particles are functionalized, in particular roughened on their outer surface.

47. The composite material of one of claims 38 to 44, wherein the Vickers hardness of the compound material and/or a solid material formed by compacting the same exceeds the Vickers hardness of the original metal by 40% or more, preferably by 80% or more.

48. The composite material of one of claims 38 to 47, wherein the metal is formed by an Al alloy and the Vickers hardness of the compound material and/or a solid material formed by compacting the composite material is higher than 300 HV, preferably higher than 400 HV.

49. The composite material of one of claims 38 to 47, wherein the metal is formed by an Al alloy and the Vickers hardness of a solid material obtainable by compacting the composite powder is higher than the Vickers hardness of the original metal, preferably higher than 80% of the Vickers hardness of the composite powder.

50. A method of manufacturing a semi-manufactured or finished article comprising a step of producing a composite material as defined in one of claims 1 to 37 and

a step of compacting the composite material by hot isostatic pressing, cold isostatic pressing, powder extrusion, powder rolling, or sintering.

51. A method of manufacturing a semi-manufactured or finished article, comprising a step of compacting a composite material according to one of claims 38 to 49 by hot isostatic pressing, cold isostatic pressing, powder extrusion, powder rolling or sintering.

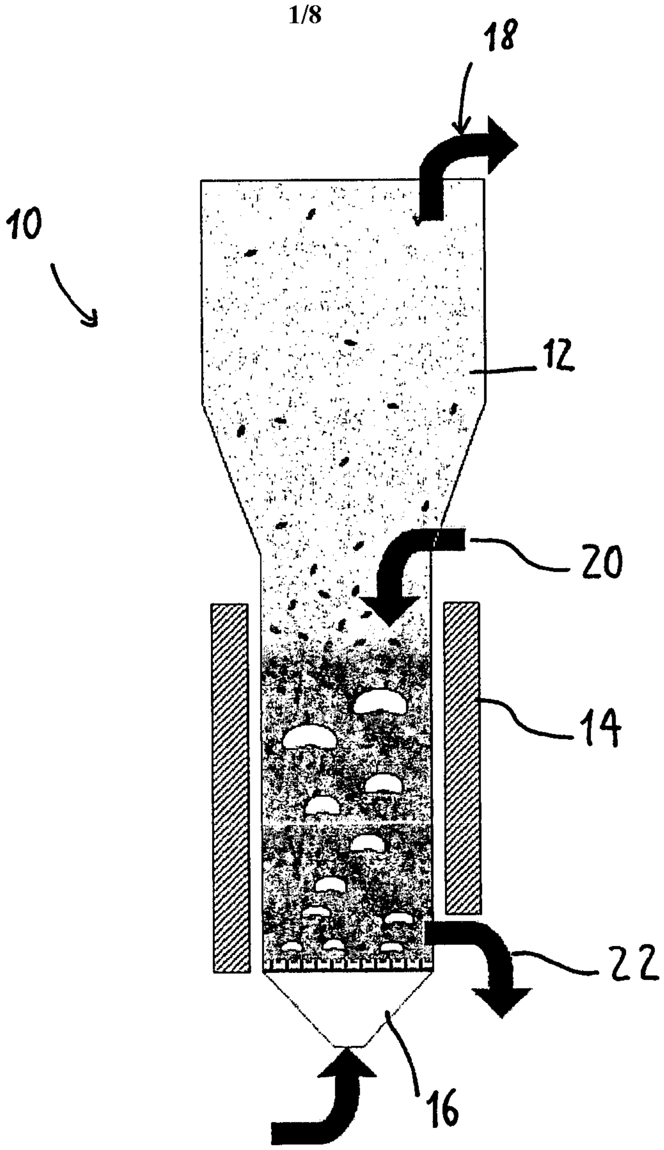

Fig. 1

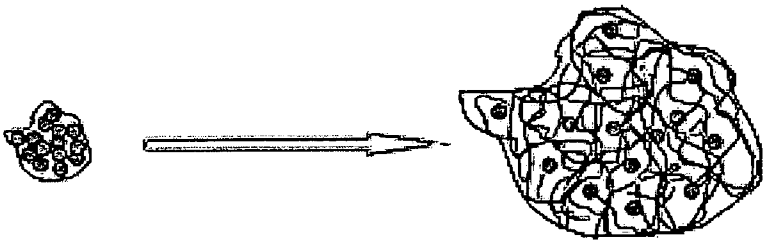

Agglomerated primary catalyst particles

Fig. 2

CNT-Agglomerate

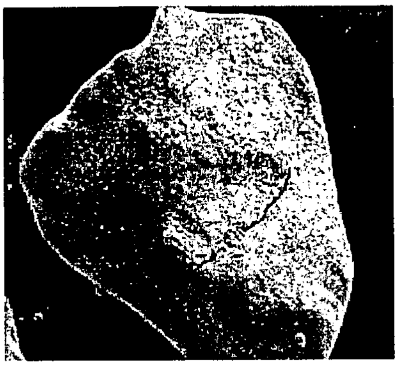

Fig. 3

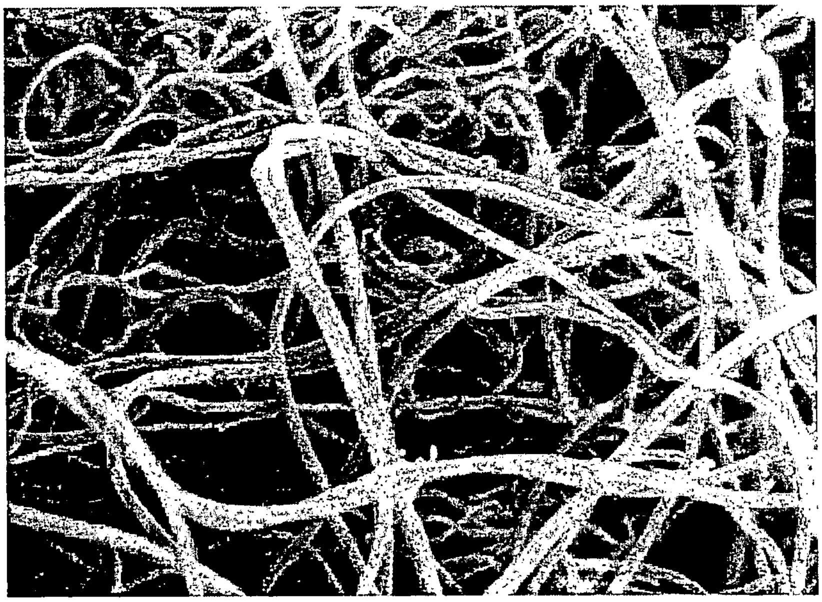

Fig. 4

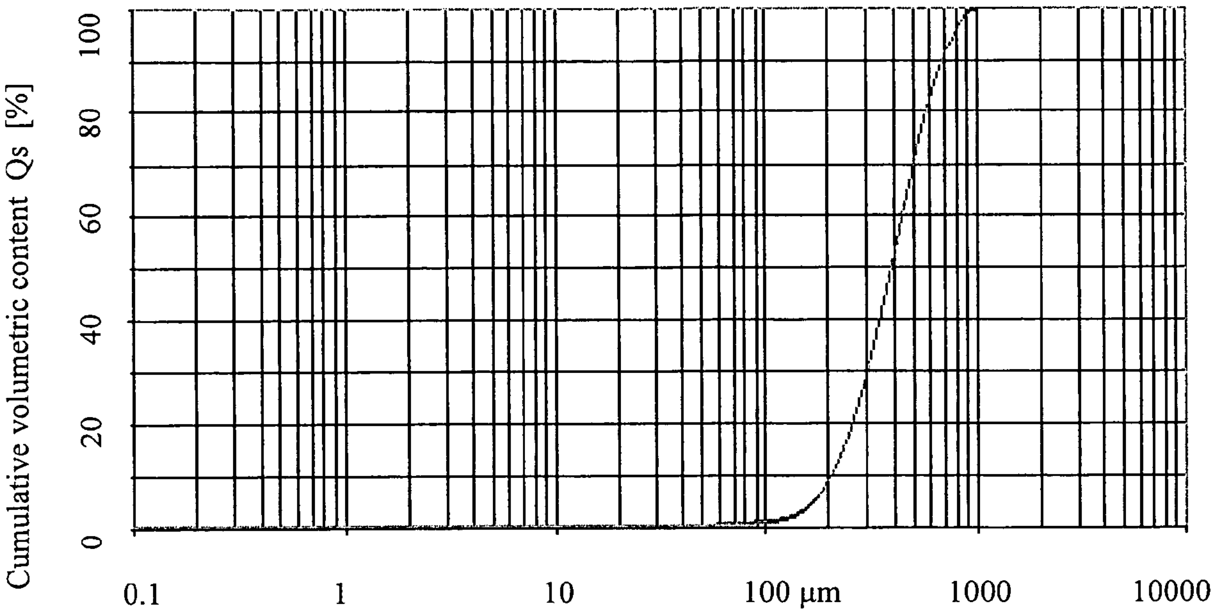

Fig. 5

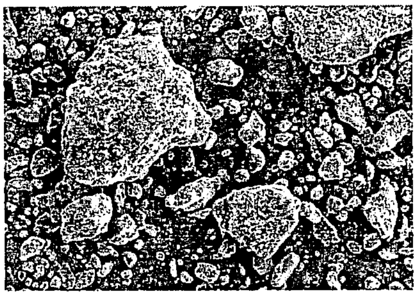

Fig. 6a

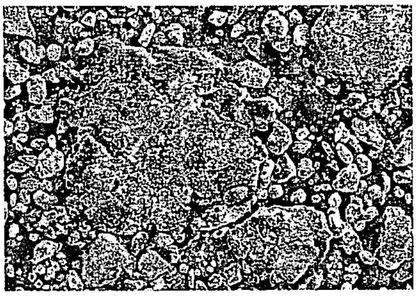

Fig. 6b

Fig. 6c

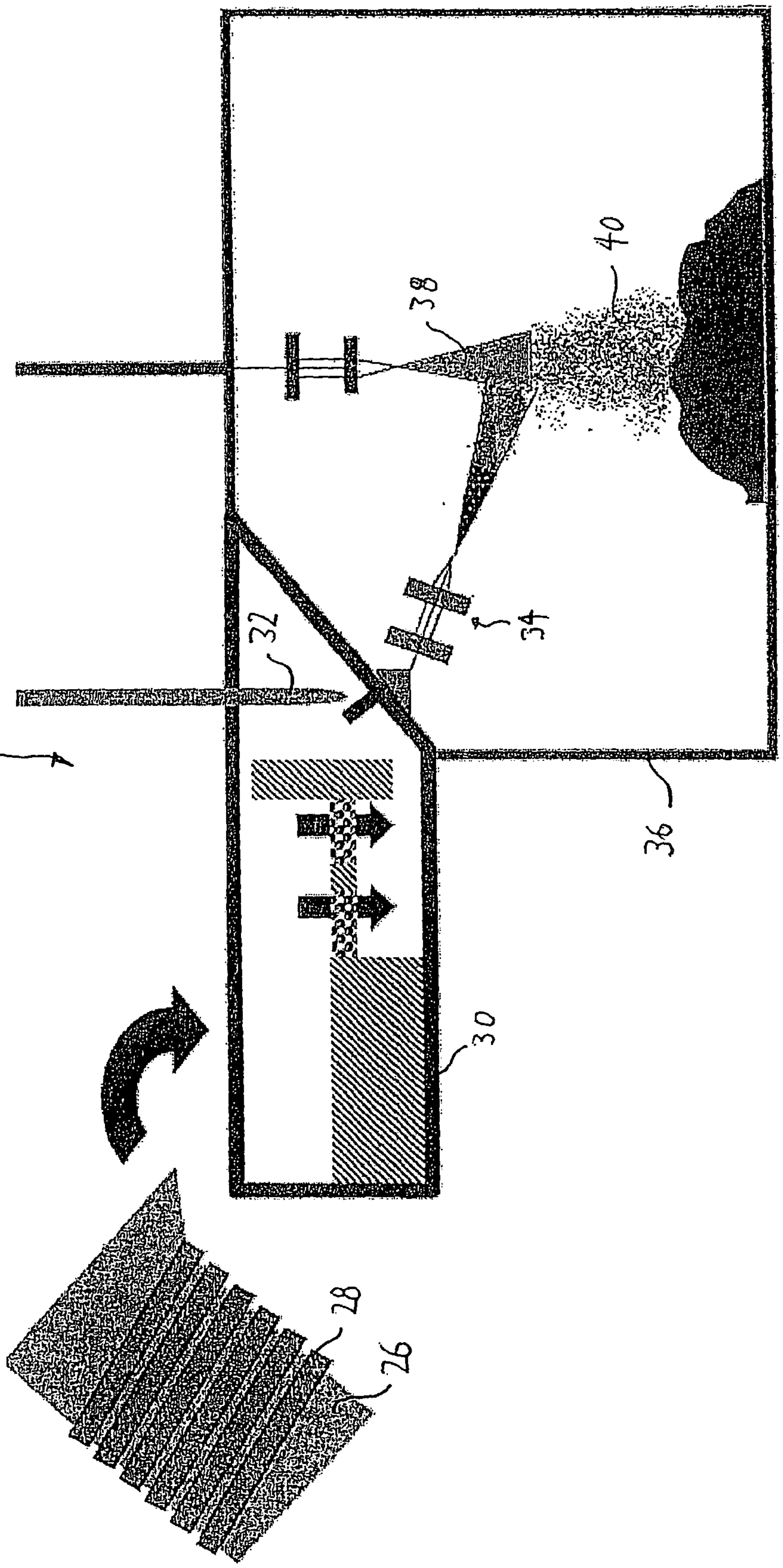

Fig. 7

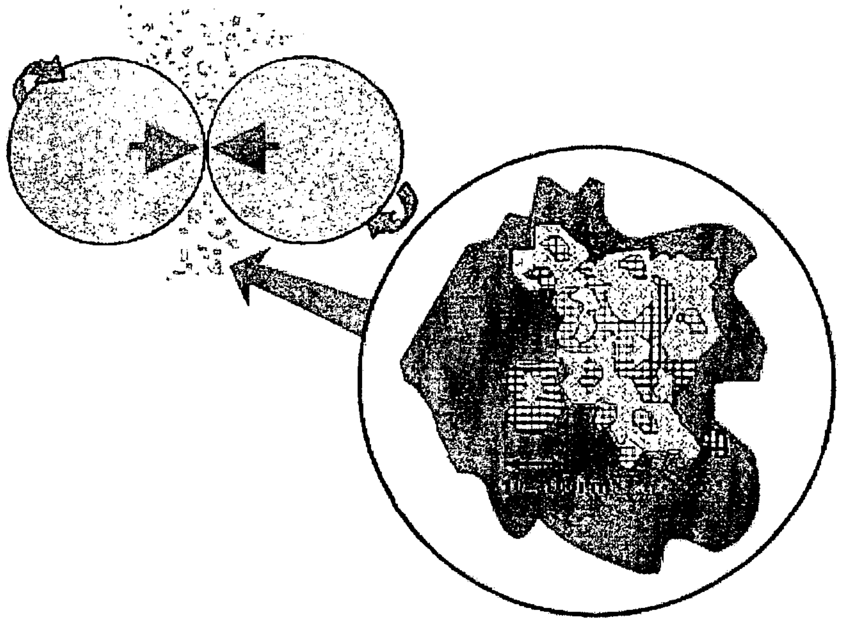

Fig. 9

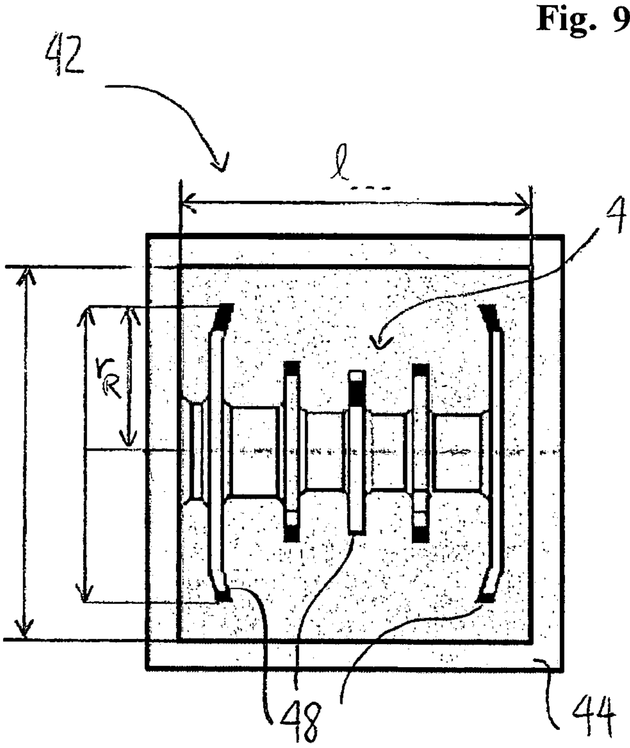

Fig. 8a

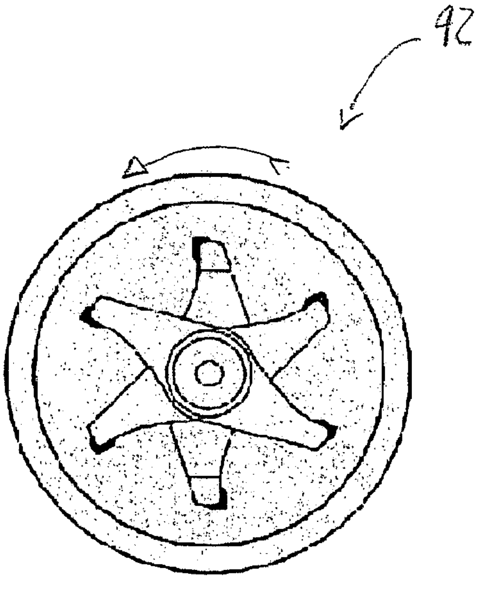

Fig. 8b

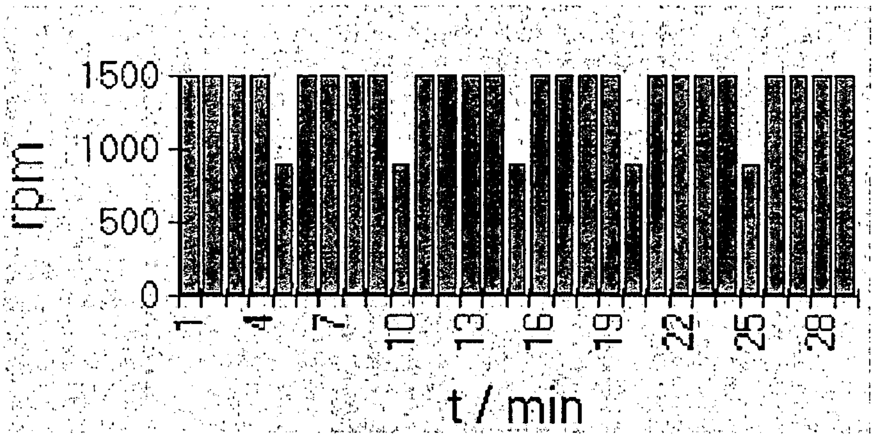

Fig. 10

Fig. 11a

Fig. 11b

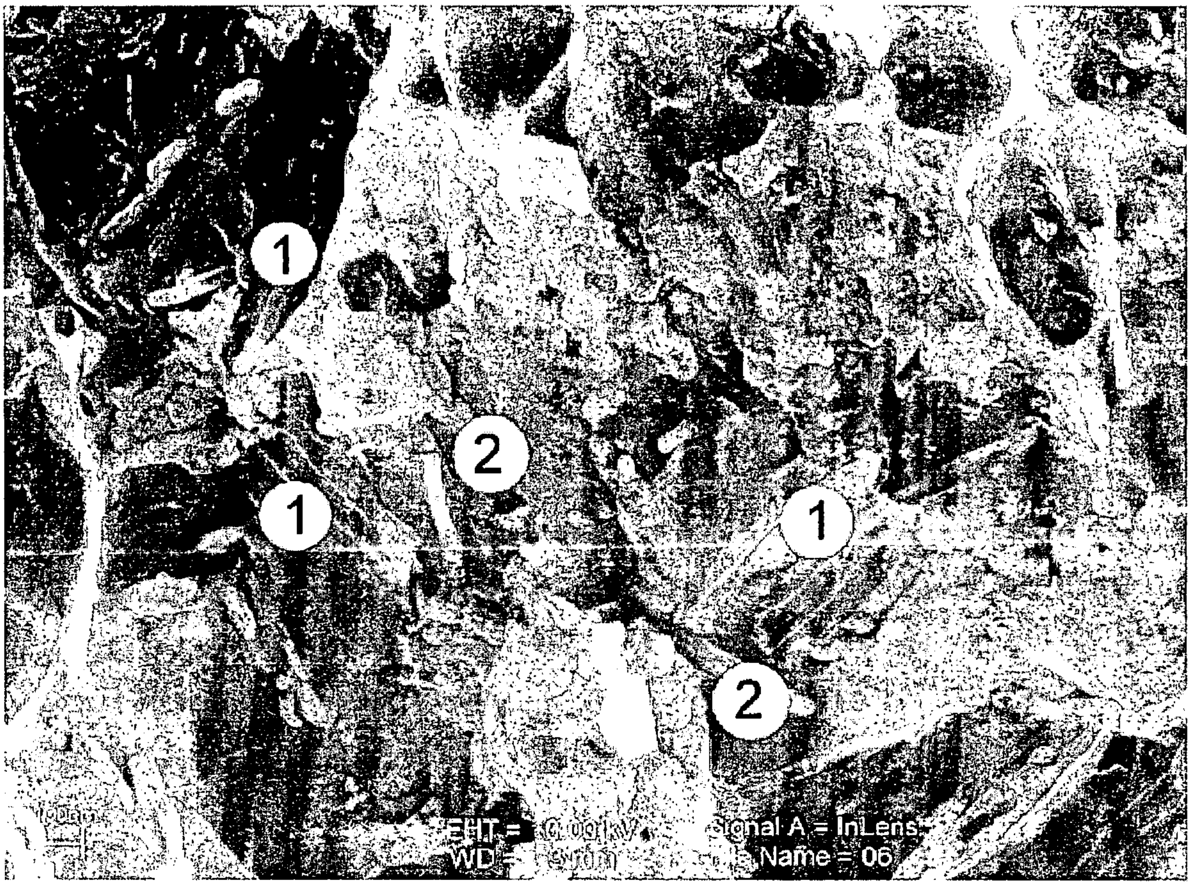

Fig. 12

INTERNATIONAL SEARCH REPORT

International application No
PCT/EP2009/006737

A. CLASSIFICATION OF SUBJECT MATTER
INV. C22C47/14 C22C49/14 C01B31/02

According to International Patent Classification (IPC) or to both national classification and IPC

B. FIELDS SEARCHED

Minimum documentation searched (classification system followed by classification symbols)
C22C C01B

Documentation searched other than minimum documentation to the extent that such documents are included in the fields searched

Electronic data base consulted during the international search (name of data base and, where practical, search terms used)

EPO-Internal

C. DOCUMENTS CONSIDERED TO BE RELEVANT

Category*	Citation of document, with indication, where appropriate, of the relevant passages	Relevant to claim No.
A	WO 2009/010297 A1 (ALCAN TECH & MAN AG [CH]; ADAMS HORST [CH]; DVORAK MICHAEL [CH]) 22 January 2009 (2009-01-22) cited in the application page 14, line 31 - page 17, line 7	1-51
A	EP 1 918 249 A1 (ALCAN TECH & MAN LTD [CH]) 7 May 2008 (2008-05-07) cited in the application paragraph [0030]	1-51
A	US 2007/134496 A1 (KATAGIRI KAZUAKI [JP] ET AL) 14 June 2007 (2007-06-14) cited in the application example 9	1-51

☐ Further documents are listed in the continuation of Box C. ☒ See patent family annex.

* Special categories of cited documents :

"A" document defining the general state of the art which is not considered to be of particular relevance

"E" earlier document but published on or after the international filing date

"L" document which may throw doubts on priority claim(s) or which is cited to establish the publication date of another citation or other special reason (as specified)

"O" document referring to an oral disclosure, use, exhibition or other means

"P" document published prior to the international filing date but later than the priority date claimed

"T" later document published after the international filing date or priority date and not in conflict with the application but cited to understand the principle or theory underlying the invention

"X" document of particular relevance; the claimed invention cannot be considered novel or cannot be considered to involve an inventive step when the document is taken alone

"Y" document of particular relevance; the claimed invention cannot be considered to involve an inventive step when the document is combined with one or more other such documents, such combination being obvious to a person skilled in the art.

"&" document member of the same patent family

Date of the actual completion of the international search 4 February 2010	Date of mailing of the international search report 10/02/2010
Name and mailing address of the ISA/ European Patent Office, P.B. 5818 Patentlaan 2 NL – 2280 HV Rijswijk Tel. (+31-70) 340-2040, Fax: (+31-70) 340-3016	Authorized officer González Junquera, J

3

INTERNATIONAL SEARCH REPORT

Information on patent family members

International application No
PCT/EP2009/006737

Patent document cited in search report	Publication date	Patent family member(s)	Publication date
WO 2009010297 A1	22-01-2009	NONE	
EP 1918249 A1	07-05-2008	CA 2668089 A1	08-05-2008
		CN 101553428 A	07-10-2009
		WO 2008052642 A1	08-05-2008
		KR 20090087438 A	17-08-2009
US 2007134496 A1	14-06-2007	WO 2005040066 A1	06-05-2005