Nov. 12, 1963 W. J. WINGATE ETAL 3,110,417

AUTOMATIC CAN VENDING MACHINE

Filed Feb. 17, 1959 4 Sheets-Sheet 1

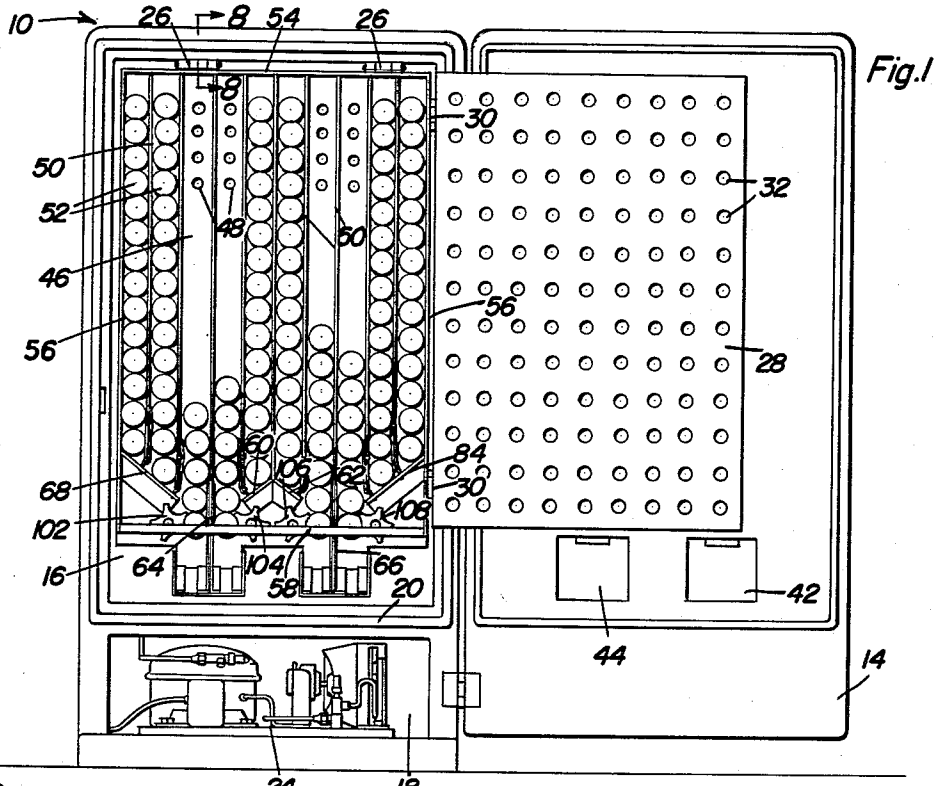

Fig.1

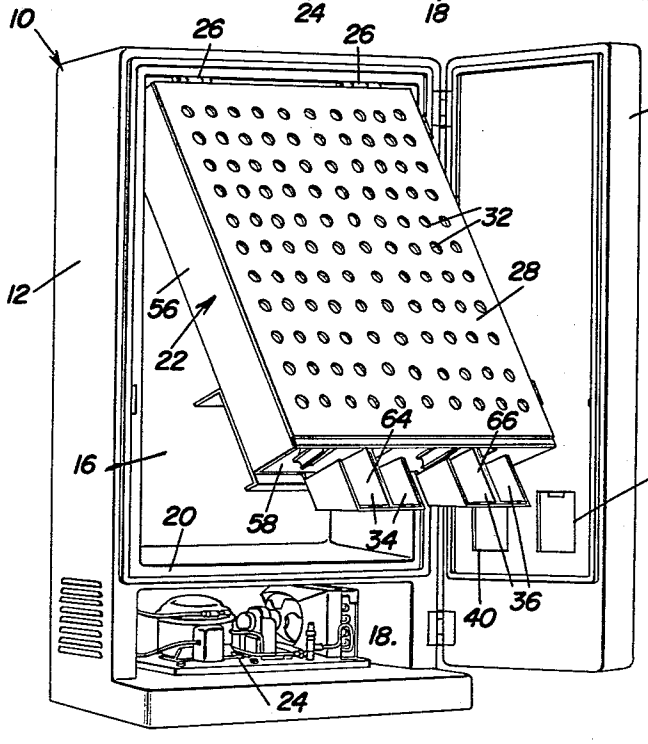

Fig.2

Wilmer J. Wingate
Clarence A. Wingate
INVENTORS

BY Clarence A. O'Brien and Harvey B. Jacobson
Attorneys

Nov. 12, 1963 W. J. WINGATE ETAL 3,110,417

AUTOMATIC CAN VENDING MACHINE

Filed Feb. 17, 1959 4 Sheets-Sheet 2

Fig.3

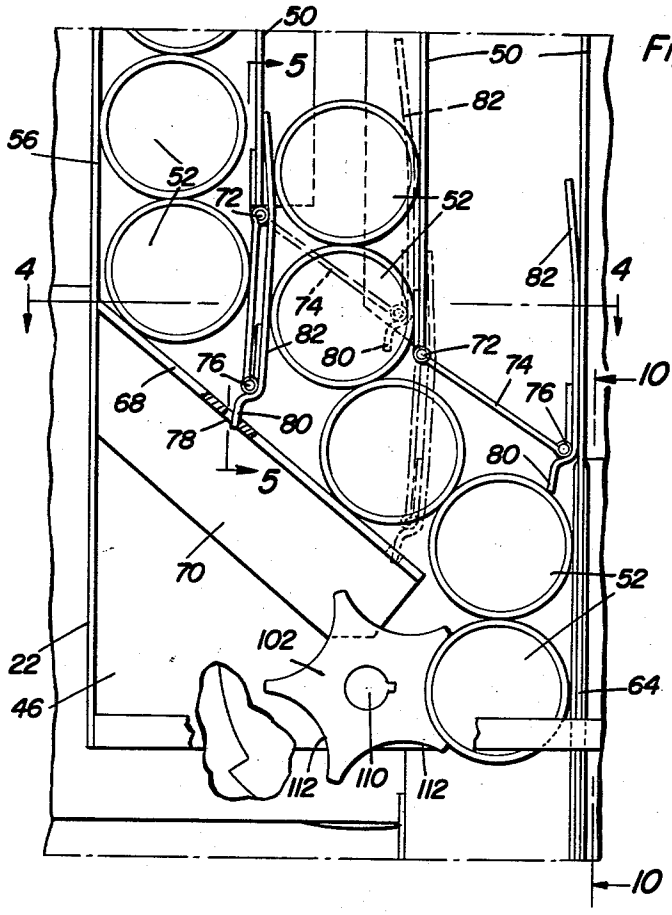

Fig.5

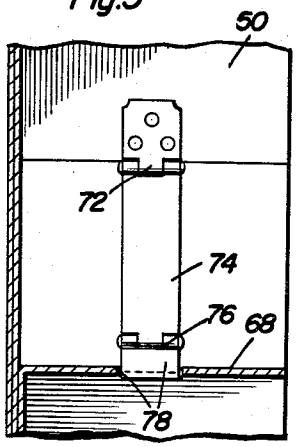

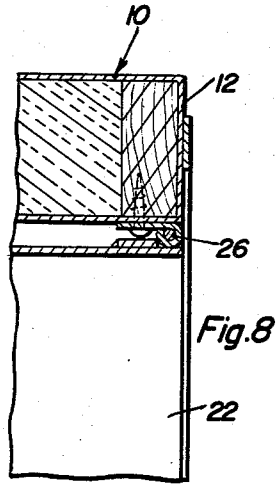

Fig.8

Fig.4

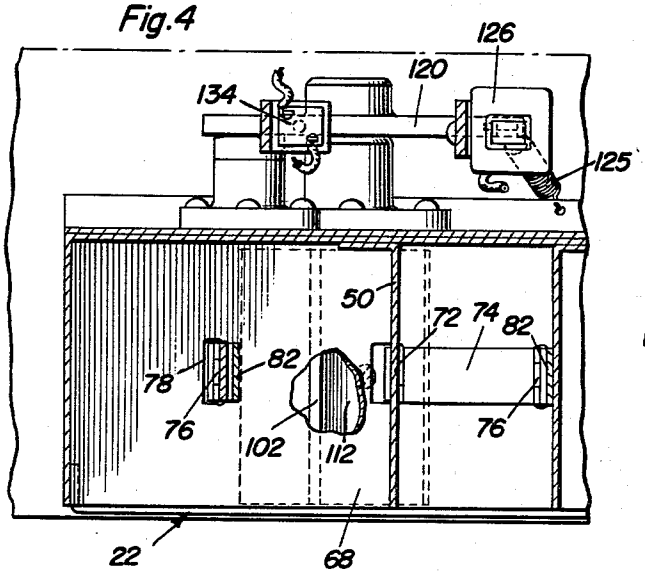

Wilmer J. Wingate

Clarence A. Wingate

INVENTORS

BY Clarence A. O'Brien and Harvey B. Jacobson

Attorneys

Nov. 12, 1963 W. J. WINGATE ETAL 3,110,417

AUTOMATIC CAN VENDING MACHINE

Filed Feb. 17, 1959 4 Sheets-Sheet 3

Fig.6

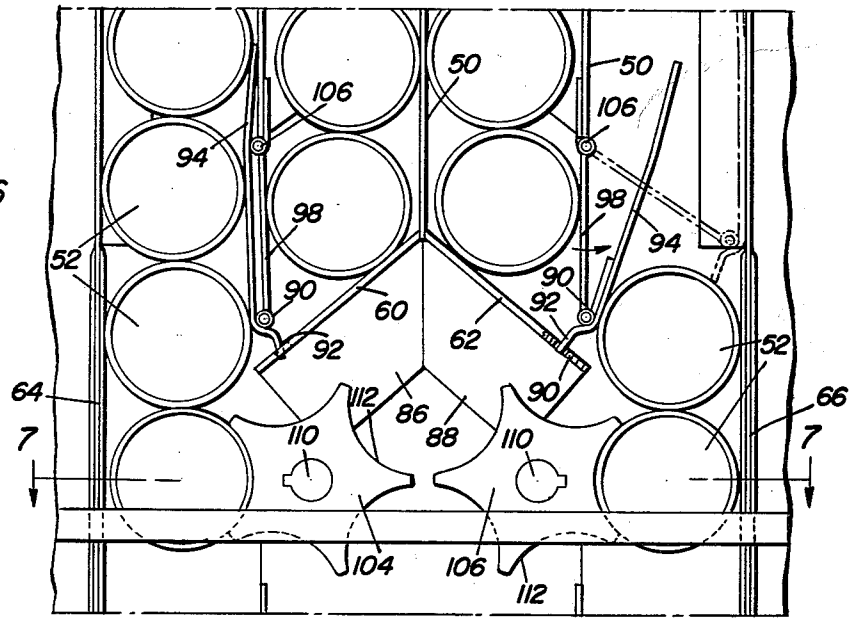

Fig.7

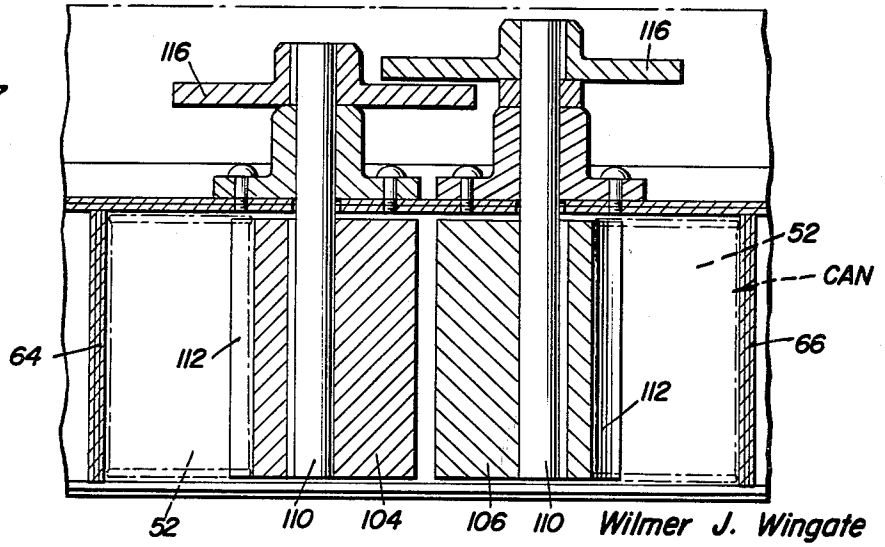

Wilmer J. Wingate
Clarence A. Wingate
INVENTORS

BY Clarence A. O'Brien and Harvey B. Jacobson
Attorneys

Nov. 12, 1963 W. J. WINGATE ETAL 3,110,417

AUTOMATIC CAN VENDING MACHINE

Filed Feb. 17, 1959 4 Sheets-Sheet 4

Fig.9

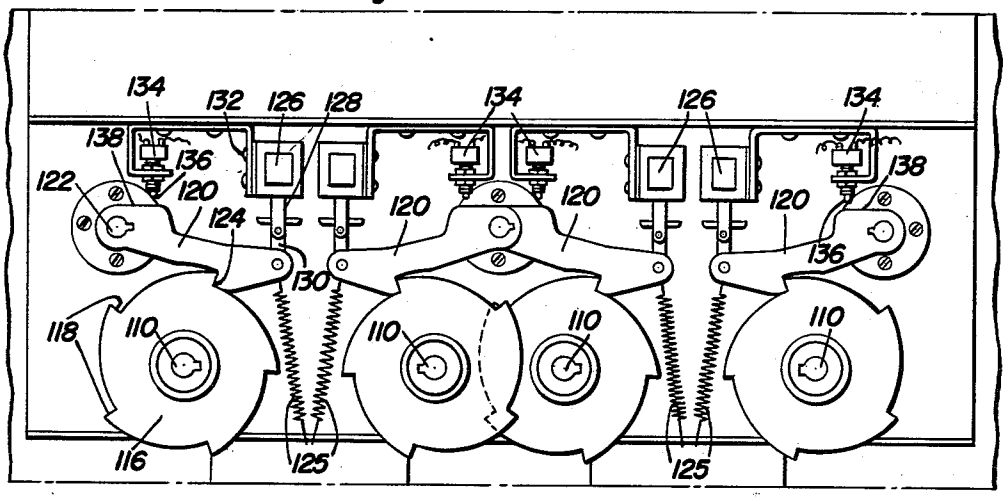

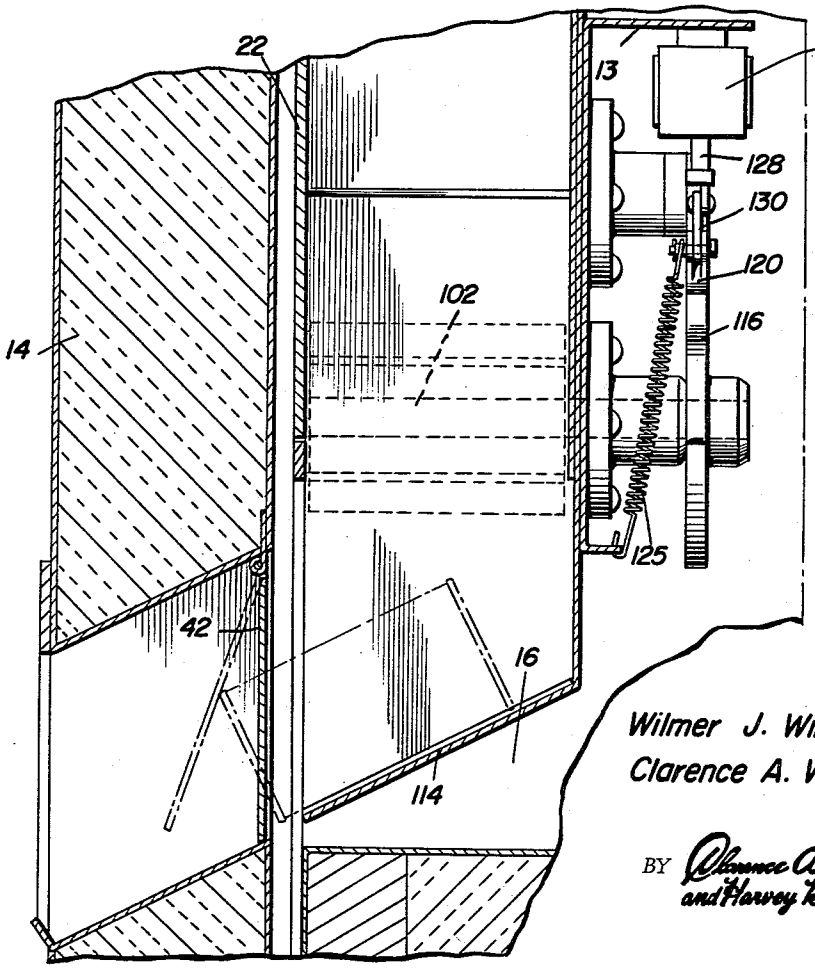

Fig.10

Wilmer J. Wingate
Clarence A. Wingate
INVENTORS

BY Clarence A. O'Brien and Harvey B. Jacobson
Attorneys

United States Patent Office

3,110,417

Patented Nov. 12, 1963

1

3,110,417

AUTOMATIC CAN VENDING MACHINE

Wilmer J. Wingate and Clarence A. Wingate, both % Wingate Mfg. Co., 4750 Airport Drive, Charlotte, N.C.

Filed Feb. 17, 1959, Ser. No. 793,785
5 Claims. (Cl. 221—111)

This invention comprises a novel and useful automatic can vending machine and more particularly relates to a coin controlled apparatus which is adapted for the storage of cans in a compact and improved manner within a cabinet and selectively dispensing the same singly upon actuation of the mechanism.

The primary purpose of this invention is to provide a vending apparatus wherein canned drinks or other commodities may be stored under refrigeration in an improved manner and may be singly dispensed from the apparatus under any conventional coin controlled mechanism.

A further object of the invention is to provide a vending apparatus in accordance with the preceding object wherein the magazine in which the cans to be vended are stored shall be mounted in the apparatus in an improved manner whereby the same may be swung from the apparatus to obtain access to the rear of the storage cabinet behind the magazine.

A further object of the invention is to provide an apparatus in accordance with the preceding objections wherein the magazine shall be constructed for storing the cans in a plurality of vertical rows together with dispensing mechanism whereby each row or column will be exhausted before cans are withdrawn from the next succeeding row.

Another important object of the invention is to provide an automatic can vending apparatus in accordance with the preceding objects which shall include a novel automatic gate mechanism disposed between adjacent vertical rows in the magazine and automatically operable to prevent discharge of a can from one row until all of the cans have been exhausted from a preceding row.

Still another important object of the invention is to provide a vending apparatus as set forth in the preceding objects wherein an improved and highly effective escape mechanism is provided to insure the single dispensing of cans from the apparatus.

These together with other objects and advantages which will become subsequently apparent reside in the details of construction and operation as more fully hereinafter described and claimed, reference being had to the accompanying drawings forming a part hereof, wherein like numerals refer to like parts throughout, and in which:

FIGURE 1 is a front elevational view of a preferred embodiment of an automatic coin controlled refrigerated can vending apparatus in accordance with the principles of this invention, the door of the cabinet of the apparatus and the cover door of the magazine being both open to show the interior of the cabinet of the apparatus and the interior of the magazine;

FIGURE 2 is a perspective view of the apparatus showing the door of the cabinet opened and showing the manner in which the magazine is swung tiltingly out of the refrigerated and storage chamber of the apparatus;

FIGURE 3 is an enlarged detail view of the lower left hand portion of the apparatus of FIGURE 1 and showing in particular the manner in which the automatic gates retain the cans in a row until all of the cans of the preceding vertical row or column have been dispensed therefrom, parts being broken away and shown in section;

2

FIGURE 4 is a horizontal sectional detail view taken substantially upon the plane indicated by the section line 4—4 of FIGURE 3, parts being broken away therein;

FIGURE 5 is a vertical transverse sectional detail view taken substantially upon the plane indicated by the section line 5—5 of FIGURE 3 and showing in elevation some of the construction of the automatic gates in the magazine of the apparatus;

FIGURE 6 is an enlarged detail view of the middle portion of the magazine of FIGURE 1;

FIGURE 7 is a horizontal sectional detail view taken substantially upon the plane indicated by section line 7—7 of FIGURE 6 and showing some of the mechanism of the single dispensing of cans on the apparatus;

FIGURE 8 is a detail view in vertical transverse section taken substantially upon the plane indicated by section line 8—8 of FIGURE 1 and showing in particular the hinge by which the storage magazine is pivotally mounted in the cabinet of the apparatus;

FIGURE 9 is a rear elevational view of a portion of the mechanism for controlling the dispensing of cans singly from the magazine; and

FIGURE 10 is a vertical sectional view taken substantially upon the plane indicated by the section line 10—10 of FIGURE 3 and showing further details of the discharge chute of the apparatus and of the dispensing mechanism.

Referring first to FIGURES 1 and 2 it will be observed that the numeral 10 designates generally the cabinet or housing of a suitable form of an automatic can vending machine in accordance with this invention. The cabinet includes an insulated body 12 having a door 14 hinged thereto at one side thereof by which access may be had to the interior of the cabinet for servicing the same as required. The cabinet includes an upper compartment 16 together with a lower compartment 18, a partition 20 being provided therebetween to divide the interior of the cabinet into these two compartments. The upper compartment 16 comprises a chamber in which is received the storage magazine 22 together with the vending mechanism by which cans are discharged from this magazine as set forth hereinafter.

The compartment 18 has therein a conventional form of automatic refrigerating system 24 by means of which the temperature of the storage compartment 16 is maintained at a desired refrigerating value.

As will be readily understood, the cabinet 10 may be of any suitable construction, it being of course suitably insulated to retain the cans stored therein at a desired refrigerated temperature by means of the refrigerating apparatus 24. Inasmuch as the construction of the refrigerated cabinet and the refrigerating means therefor may be of any conventional type, and do not in themselves constitute a part of the invention claimed herein and since an understanding of this specific construction is not necessary for the purposes of understanding the invention claimed herein, a further description of the same is deemed to be unnecessary.

Referring now also to FIGURES 2 and 8 it will be observed that the storage compartment of magazine 22 comprises a cabinet-like housing which is hinged at its forward upper surface and the forward portion of the cabinet 12 by means of hinges 26. By this means, when the door 14 of the housing 12 is open, the complete stor-

age magazine may be swung or tilted forwardly from the interior of a refrigerator compartment 16 into an upwardly tilted position as shown in FIGURE 2, thereby affording access to the rear portion of the magazine and the dispensing mechanism mounted thereon.

The magazine 22 is provided with a door or closure panel 28 which at one side is hinged to the magazine along a vertical edge of the latter as by hinges 30 whereby the door may be horizontally opened as shown in FIGURE 1 to obtain access to the magazine for refilling the same with cans. Preferably the door 28 is provided with a series of aperture or windows 32 whereby when the door is closed as shown in FIGURE 2, an easy inspection may be made to determine the quantity of cans still remaining the magazine and thus ascertain whether the magazine requires filling.

As will be further apparent from FIGURES 1 and 2, there are provided pairs of depending can delivery chutes as at 34 and and 36 which extend below the lower surface of the magazine 22 and are disposed in alignment with vending openings 38 and 40 which register therewith respectively, these openings being in turn controlled by doors 42 and 44 respectively. In operation, after a can has been dispensed from the magazine of the apparatus, the appropriate door 42 or 44 may be opened by the cans sliding down the discharge chute 34 or 36.

From a reference to FIGURE 1 it will be observed that the can storage magazine 22 is a box-like generally rectangular structure having a back wall 46 therein which may be provided with apertures therethrough as at 48 similar to the openings 32 in the cover 28. The apertures 48 serve to facilitate the circulation of the refrigerated air within the cabinet compartment 16 whereby the latter may pass through the magazine thereby facilitating the chilling of a new supply of cans with which the magazine may be stocked as well as to effect refrigeration of the contents of the magazine.

The interior of the magazine is divided by vertical partitions indicated at 50 into a plurality of vertical storage columns, in each of which a series of vertically stacked cans 52 may be disposed. These partitions at their upper ends engage and are connected to the top wall 54 of the magazine, and are parallel to the side walls 56 thereof. However, their lower ends terminate above the horizontal bottom wall 58 of the magazine, there being provided a dispensing mechanism therebetween of a construction to be subsequently apparent.

It will be readily appreciated that although various numbers and arrangements of the vertical rows for receiving the cans in the magazine are possible, a convenient arrangement as shown in FIGURE 1 enables the storing of and the dispensing of four separate commodities, each commodity being stored in a plurality of rows. In some instances, a single commodity may be stored in all of the vertical rows and could be dispensed by a single dispensing mechanism rather than a plurality of dispensing mechanism as disclosed herein.

It will be observed that the central vertical partition 50 at its lower end rests upon and engages a pair of relatively oppositely inclined downwardly divergent chutes or guide surfaces 60 and 62. Consequently, the cans in the vertical rows immediately to the right and left of this compartment can be of different commodities since they will be dispensed from opposite inclined chutes or surfaces 60 and 62 to opposite outlets. Similarly, there are provided vertical divider walls 64 and 66, the former having its lower end extending into the discharge chutes 34 to divide the latter, while the partition 66 similarly extends into the chutes 36. At their upper ends, the divider wall 64 and 66 receive thereon and have engaging therewith one of the vertical partitions 50. Thus, the series of vertical columns to the left of the partition or divider wall 64 comprise one group of storage columns which all deliver to a single discharge chute, and thus may consist of one commodity; while the columns lying between the partition 64 and the partition resting upon the inclined guide surfaces 60 and 62 will be delivered to the other of the discharge chutes 34 and thus may contain a second commodity. In a similar manner, the group of vertical columns lying to the left of the divider 66 will be delivered to one of the discharge chutes 36, while those to the right will be delivered to the other of the discharge chutes 36, and each of these groups of columns being separately discharged may contain a different commodity.

Reference is now made more specifically to FIGURE 3 which shows upon an enlarged scale and more clearly the group of columns, in this instance, three columns or obviously any desired number of columns could be provided for this purpose, which lie to the left of the vertical divider partition or wall 64. It will be observed that there is provided a downwardly inclined plate 68 forming part of a dispenser guide passage which extends from the side wall 56 and is secured as by an angle flange 70 to the back wall 46, this plate sloping downwardly beneath the partitions 50 and in spaced relation to the lower edges of the latter. Thus, each of the vertical columns except that immediately adjacent to the divider wall 64 has its lower end terminating in spaced relation to the surface of the plate or chute 68, so that when cans are released from the lower ends of these chutes they will move by gravity down the inclined surface 68 and into the space below the column which is immediately adjacent the plate 64 for dispensing therefrom as set forth hereinafter.

A gate mechanism is provided for retaining the cans 52 in each of the vertical columns until all of the cans have been discharged from the preceding column. This means consists of automatically operated gates. As shown in FIGURE 3 in conjunction with FIGURE 5, the lower end of the columns 50 have hingedly secured thereto as by a conventional hinge connection 72 a strap member 74 comprising a gate, and which is provided with a hinge 76 at its lower end. Directly beneath the partition 50 the sloping guide surface or chute 68 is provided with a slot or opening 78 therein and a latch finger 80 of a latch device is received in this slot, the latch finger being carried by a latch actuating lever arm 82 of the latch device. The lever arm is pivoted to the hinge 76 and extends upwardly into the adjacent vertical column as shown in full lines in FIGURE 3.

The lever 82 is positioned against the side of the vertical wall 50 of the adjacent column so that the row of cans 52 therein will retain this lever in its raised position against this wall. In this position, the latch finger 80 is retained in the latch slot 78 and the gate will thus bar the emergence of the cans in the column to the left.

It will thus be apparent that the cans in a preceding column will serve to retain the gate in its latched and closed position thereby preventing egress of the cans from the succeeding column.

However, when the last can of a preceding column has passed below that portion of the latching lever 82 immediately above the hinge 76, the pressure of the cans against the left side of this gate will tend to push the hinge 76 towards the right thereby causing the latch lever 82 to swing from its vertical position to an inclined position sufficiently to permit the latch finger 80 to be withdrawn from the notch or slot 78. This will release the member 74 allowing the same to swing about its hinge 72 so that the gate will then move into the dotted line position as shown in FIGURE 3, whereupon the cans immediately to the left thereof will be free to move down the incline 78 from the row thus opened. At the extreme right of FIGURE 3, the latch and gate construction are shown in the fully open position in full lines therein, this view illustrating the manner in which the cans from the just released row or column are free to pass through the opened gate and latch mechanism.

As will now be apparent, all the cans will be fed from the right hand column of FIGURE 3 whereupon the latch

mechanism will be released to the middle column, the cans will then be successively fed from the latter until that column is in turn emptied. Thereupon the latch at the left side of FIGURE 3 will in turn be released and the cans will then be fed from the last column shown therein. Thus, all of the cans will be successively fed from the plurality of columns, a succeeding column being unlatched only after the preceding column has been completely emptied of cans. The passage formed between the gates and the guide 68 will therefore be progressively extended as the vertical columns 50 are exhausted.

The construction shown in FIGURE 3 is duplicated at the right side of the cabinet arrangement of FIGURE 1, the guide surface chute 84 corresponding to the guide or chute 68 previously described with the gate mechanism being identical with that previously set forth. In this instance, however, the cans are successively fed from the vertical column immediately to the right of the vertical divider 66, then from the next adjacent column to the right, and finally from the column at the extreme right.

A similar arrangement is shown in FIGURE 6 for the two groups of columns disposed between the dividers 64 and 66. In this portion of the apparatus, the chute 60 and 62 likewise have mounting flanges 86 and 88 respectively which are secured to the back wall of the magazine. As illustrated, there are two columns of cans disposed between the divider members 64 and 66 and the partition resting upon the guide chute 60 and 62, although obviously it will be possible to provide more vertical columns if desired.

The chute 60 and 62 have therein the latching slots or keepers 90 receiving the latch fingers 92 of the latch lever 94, the latter being pivoted as at 96 to the lower end of the latch gate 98 which at its upper end is hinged as at 100 to the lower end of a vertical partition 50. The arrangement of the latching mechanism in its operation is identical with that previously described and a further description is therefore believed to be unnecessary.

In order to control the feeding of the cans singly from the magazine there are provided a plurality of dispensing wheels, there being employed one such wheel for each group of magazine columns. Since four such groups of columns in the embodiment are illustrated herein, four such dispensing wheels are provided. These four wheels were indicated at 102, 104, 106 and 108 respectively. The wheel 102 in its arrangement is shown particularly in FIGURE 3, the wheels 104 and 106 in FIGURE 6, while the wheel 108, shown in FIGURE 1 is of the same construction and arrangement as that of the wheel 102.

Each of the dispenser wheels 102—108 are secured to a shaft, each of these shafts bearing the numeral 110 and being suitably journaled in the magazine structure. The periphery of these wheels are scalloped as at 112 to provide pockets, which are of sufficient size to receive a portion of a circumference of a can therein. The wheels are spaced from the adjacent divider walls 64 or 66 as will be seen from FIGURES 3 and 6, so that as a can moves downwardly against this divider wall it can pass the wheel only if it engages in one of the pockets 112, the rotation of the wheel being necessary to permit the can to then pass downwardly past the wheel. A control mechanism is provided to prevent rotation of the dispenser wheels except when it is intended to vend or dispense a can from the apparatus as set forth hereinafter. Thus, the wheels 102—108 serve to retain the cans in their respective groups of rows or columns in the magazine until the wheels are released for movement to dispense a single can therefrom in its group of columns as set forth hereinafter.

When a selected dispenser wheel has been released so that it may rotate sufficient to release the can held thereby and receive the next adjacent can thereabove, the release can will drop downwardly below the dispenser wheel as shown in FIGURE 10 upon an inclined discharge surface 114 from whence it will slide to the associated discharge chutes 34 or 36, from whence it may be removed by opening the doors 42 or 44 and extracting the can through the openings 38 or 40 controlled thereby.

It will be understood that the operation of all of the dispenser wheels and the manner in which the release cans are discharged from the apparatus is the same and a further description thereof is believed to be unnecessary.

The shafts 110 upon which the dispenser wheels are mounted, extend to the rearward of the magazine 22 and as shown in FIGURES 7, 9 and 10 are each provided with ratchet wheels, each designated by the numeral 116 and which are fixedly secured thereto. Each of the ratchet wheels are provided with a plurality of radially extending stop surfaces or ratchet teeth 118 the number of these being identical with the number of the pockets 112 upon the dispenser wheels. In view of the close disposition of the two shafts upon which the dispenser wheels 104 and 106 are disposed, the corresponding ratchet wheets 116 therefor are caused to overlap each other as shown in FIGURE 7.

Each of the ratchet wheels has associated therewith a lever 120 comprising a ratchet pawl. Each lever is journalled at one end upon a suitable axle or fulcrum 122 and intermediate its ends is provided with a downwardly projecting hook 124 adapted to ride upon the periphery of the ratchet wheel 116 and selectively engage in sequence the ratchet teeth or stops 118 thereon. At its outer end each ratchet pawl is provided with a spring 125 which yieldingly urges the pawl downwardly into engagement with the corresponding ratchet wheel.

In order to momentarily release the ratchet pawl from its ratchet wheel for a sufficient length of time to permit the dispenser wheel to release one can held thereby, there is provided an electrical control means. This means consists of an electrical solenoid or electromagnet 126 having its armature 128 connected by a link 130 with the ratchet pawl 120. The electromagnet is mounted upon its suitable supporting bracket 132 carried by the structure of the magazine, and the solenoid operates to lift the ratchet pawl 120 against resistance of this return spring 125, thus momentarily disengaging the hook 124 from the ratchet tooth 118. When this ratchet pawl is lifted, the weight of the can held in the pocket of the dispenser wheel will cause the same to rotate sufficiently to drop the can therefrom and permit the can to be discharged from the apparatus as previously mentioned. Means are provided to insure that after the ratchet pawl has been lifted, and the shaft 110 and dispenser wheel thereon has been rotated a sufficient extent for the purpose above described, that the pawl 120 will then be released from its electromagnet 126 and again returned to locking position by the spring 125, thereby causing the hook 124 to engage with the next successive ratchet tooth or stop 118.

This release mechanism includes a relay or microswitch 134 having an actuating button 136 disposed above the pawl 120, with the latter being provided with a surface 138 positioned beneath and adapted to actuate the button 136 upwardly when the ratchet pawl is lifted by the solenoid 126.

The arrangement is such that when the solenoid 126 is energized it will release the corresponding ratchet pawl, and when the latter has completed its upstroke, the surface 138 thereon will actuate the button 136 of the relay or microswitch 134, which latter will then interrupt the circuit of the solenoid 126 and permit the spring 125 to return the pawl to its lowered and locking position.

The actual electrical circuits for the electromagnets and the release switches 134 may be of any conventional design and in themselves form no part of the invention

claimed herein. Since the principles of this invention are not limited to any particular construction of these elements or any particular electrical circuit for actuating the same, a further description is deemed to be unnecessary.

It may be noted, however, that in general this device is adapted to be operated by the deposition of a coin or coins in the usual coin actuating mechanism, not shown. The depositing of the coins will energize the various electrical circuits and render the machine ready for operation. Accordingly, when the usual selector controls are manipulated, to effect the dispensing of a can from one of the four groups of commodities which may be dispensed by this apparatus, the solenoid **126** will be energized effecting the disengaging of the pawl from the ratchet wheel for a sufficient length of time to permit the ratchet wheel to start turning with the dispenser wheel. As soon as the pawl completes its upward travel, it in turn actuates the release switch **134**, disconnecting the electrical circuit, permitting the pawl to return to its locking position, and rendering the machine idle until the next insertion of a coin and operation of a selector control.

However, there will necessarily be a sufficient time delay between the actuation of the solenoid **126**, the lifting of the lever **120**, and the disconnecting of the solenoid to permit the ratchet wheel to start turning so that when the pawl drops, it will engage the periphery of the ratchet wheel rearwardly of its locking position thereon, enabling the ratchet wheel and the dispensing wheel to continue turning until the can has been dispensed from the apparatus.

The foregoing is considered as illustrative only of the principles of the invention. Further, since numerous modifications and changes will readily occur to those skilled in the art, it is not desired to limit the invention to the exact construction and operation shown and described, and accordingly all suitable modifications and equivalents may be resorted to, falling within the scope of the invention as claimed.

What is claimed as new is as follows:

1. In an automatic can vending machine, a magazine comprising a receptacle having a plurality of vertical partitions therein defining therebetween vertical columns for storing cans to be disposed, gravity feed discharge means extending beneath the lower ends of said partitions to form a progressively extended passage, a gate carried by each partition for blocking said passage, each gate having a latch releasably engaging said discharge means to render the gate operative to block said passage and retain cans in the adjacent column, a latch lever connected to said latch and operable to release said latch in response to the pressure of cans in said discharge means for progressively extending said passage, said lever being disposed in an adjacent column for retaining said latch in latching position by the pressure of cans in said adjacent column and retained in column closing position by cans in said passage.

2. In an automatic can vending machine, a magazine having dividers therein defining a plurality of vertical columns for storing cans therein, a discharge passage, one of said columns being disposed above said discharge passage, an inclined discharge member disposed below said dividers and in spaced relation thereto whereby cans may pass by gravity from said columns to said member and along the latter to said discharge passage, a passage blocking and column closing gate for each column except that over the discharge passage, each of said gates being hinged to a respective divider for unblocking said discharge member in response to pressure of cans on an upper side of each of said gates along said discharge member while closing an adjacent column on a lower side of each of said gates along the discharge member, a latch secured to each of said gates and engageable with said inclined discharge member for preventing discharge

of cans from the adjacent column on the upper side of each of said gates along the discharge member, said latch being engageable with cans on the discharge member to hold each of said gates in column closing position with respect to the column on the lower side of the respective gate along the discharge member, actuating means in the adjacent column on the lower side of each of the gates along the discharge member actuated in response to the presence of cans in said adjacent lower column for retaining said gate in passage blocking position to prevent discharge of cans from the adjacent column on the upper side of each of the gates along the discharge member.

3. In an automatic can vending machine, a magazine having dividers therein defining a plurality of vertical columns for storing cans therein, a discharge passage, one of said columns being disposed above said discharge passage, an inclined discharge member disposed below said dividers and in relation thereto whereby cans may pass by gravity from said columns to said member and along the latter to the discharge passage, a gate for each column except that over the discharge passage, each of said gates being hinged to a respective divider, a latch secured to each of said gates and engageable with said inclined discharge member for locking its respective gate to the latter and preventing discharge of cans from adjacent columns on upper sides of each of said gates along said discharge member, each of said latches including actuating means in adjacent columns on lower sides of each of said gates along the discharge member actuated in response to the presence of cans in said adjacent columns on the lower sides for retaining the respective gates in position to prevent discharge of cans from the respective adjacent columns on the upper sides of the respective gate, each of said gates comprising a member mounted for swinging movement and extending vertically across the space between its divider and said discharge member, said discharge member having latch recesses, each of said latches further including a latch finger pivoted to its respective gate and engageable in an associated recess, said actuating means being operatively connected to said latch finger.

4. In an automatic can vending machine, a magazine having a plurality of dividers therein defining a plurality of vertical columns for storing cans therein, and a discharge passage, one of said columns being disposed above said discharge passage, an inclined discharge member disposed below said dividers and in spaced relation thereto whereby cans may pass by gravity from said plurality of columns to said member and along the latter to said discharge passage, a gate for controlling respective columns of said plurality of columns except that column over the discharge passage, each of said gates being hinged to a respective divider of said plurality of dividers, latch means movably mounted on each of said gates for engagement with said discharge member and extending into an adjacent column of said plurality of columns on a lower side of a respective gate along said discharge member, said latch means being actuated by the pressure of cans in said adjacent columns to retain said respective gates closed and being operable upon the absence of cans in said adjacent columns to open said respective gates under the pressure of the cans in said respective columns controlled by each of said gates.

5. In an automatic can vending machine, storage means for storing vertical rows of containers, dispenser means operatively aligned with said storage means in spaced relation therebelow for conducting gravity discharge of the containers therefrom, gravity responsive gate means operatively connected to the storage means for projection over the dispenser means to form a progressively extended storage closing guide passage in the dispenser means solely in response to movement of said containers in the dispenser means, said gravity responsive gate means movably mounting thereon passage blocking latch means engageable with said dispenser means and releasable there-

from in response to engagement by containers in the guide passage after exhaust of a preceding row of containers from the storage means.

References Cited in the file of this patent

UNITED STATES PATENTS

406,593	O'Kelley	July 9, 1889
539,752	Gale	May 21, 1895
2,336,382	Albrecht	Dec. 7, 1943
2,358,563	Donaldson	Sept. 19, 1944
2,480,932	James	Sept. 6, 1949
2,493,753	Devens	Jan. 10, 1950
2,570,516	Bowman	Oct. 9, 1951
2,682,440	Rogers	June 29, 1954
2,832,281	Wilcox	Apr. 29, 1958
2,941,643	Donnelly	June 21, 1960

FOREIGN PATENTS

731,924	Great Britain	June 15, 1955