(12) UK Patent (19) GB (11) 2 169 424 (13) B

(54) Title of Invention

Frequency controlled resonant regulator

(51) INT CL⁴ ; H02M 3/335, H04N 5/63

(21) Application No
8528652.4

(22) Date of filing
21 Nov 1985

(30) Priority data

(31) 676821

(32) 30 Nov 1984

(33) US

(43) Application published
9 Jul 1986

(45) Patent published
21 Jun 1989

(73) Proprietor(s)
RCA Corporation

(Incorporated in USA - Delaware)

201 Washington Road
Princeton
New Jersey 08540
United States of America

(72) Inventor(s)
Frank Starr Wendt

(74) Agent and/or
Address for Service
T I M Smith
Burdett House
4th Floor
Buckingham Street
London WC2N 6DU

(52) Domestic classification
(Edition J)
G3U UAE9 U205 U208 U211
U212 U214
H1T T1C T7A11 T7A3 T7A8
T7C5
H2H HB8 HSS H25G H25Q
U1S S2206

(56) Documents cited
GB 1576552 A
GB 1415316 A
GB 1377777 A
EP 0108336 A2
EP 0107003 A1
EP 0097884 A1

(continued on next page)

US 4250541 A
Electronic Engineering,
September 1981,
pp. 39-49

(58) Field of search

As for published application
2169424 A *viz:*
UK CL **G3U**
INT CL[4] **G05F H02M H02P**
updated as appropriate

2169424

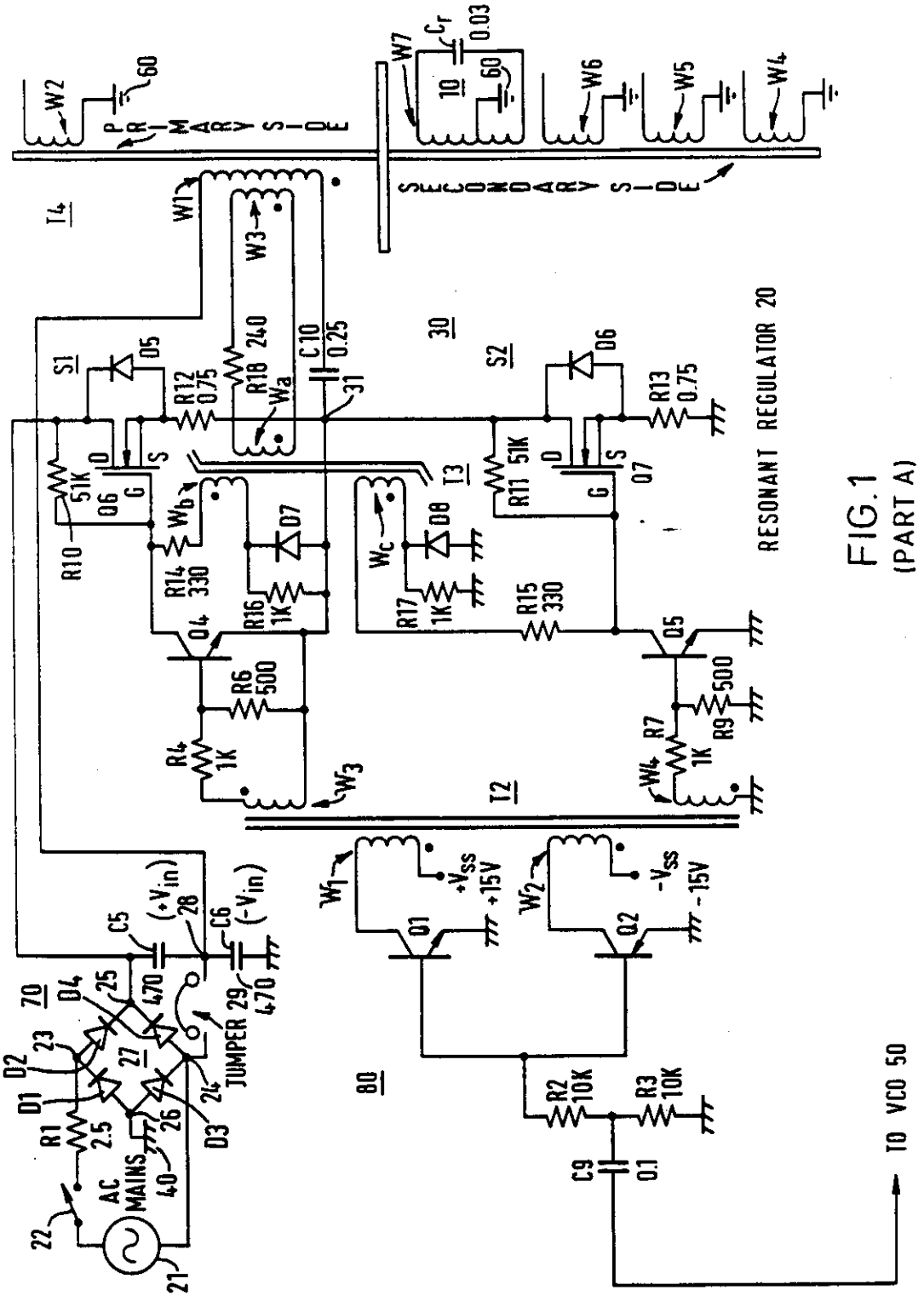

FIG.1
(PART A)

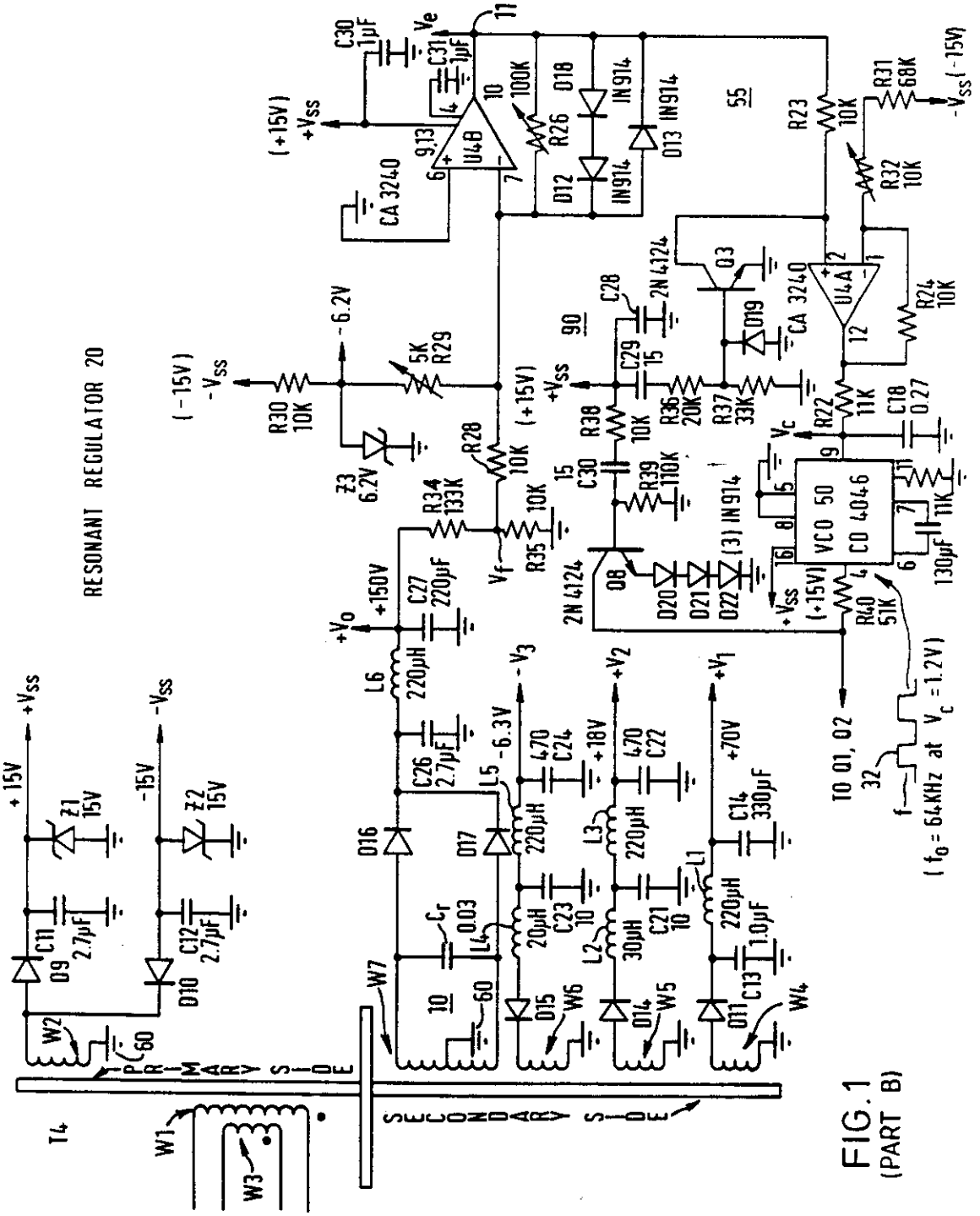
RESONANT REGULATOR 20
PRIMARY SIDE
SECONDARY SIDE
T4
W1
W2
W3
W4
W5
W6
W7
D9
D10
D11
D12
D13
D14
D15
D16
D17
D18
D19
D20
D21
D22
C11 2.7μF
C12 2.7μF
C13 1.0μF
C14 330μF
C21 10
C23 10
C26 2.7μF
C27 220μF
C28
C29 15
C30 15
C31 1μF
C30 1μF
L1 220μH
L2 30μH
L3 220μH
L4 20μH
L5 220μH
L6 220μH
Z1 15V
Z2 15V
Z3 6.2V
+15V
-15V
+Vss
-Vss
(+15V)
(-15V)
+150V
-6.3V
+18V
+70V
-6.2V
+Vo
-V3
+V2
+V1
Vf
Vc
Ve
R22 11K
R23 10K
R24 10K
R26 100K
R28 10K
R29 5K
R30 10K
R31 68K
R32 10K
R34 133K
R35 10K
R36 20K
R37 33K
R38 10K
R39 110K
R40 51K
C18 0.27
130μF
11K
470 C24
470 C22
Cr 0.03
U4A
U4B
CA 3240
VCO 50
CD 4046
Q3
Q8
2N4124
IN914
55
90
TO Q1, Q2
32
(f0 = 64KHz at Vc = 1.2V)

FIG. 1
(PART B)

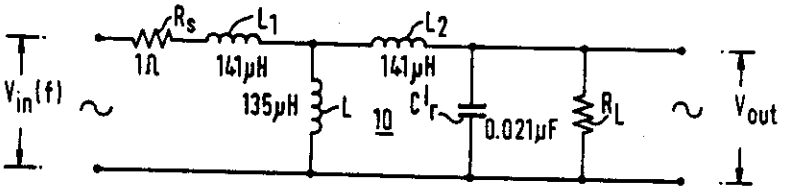
R_s
L_1
L_2
1Ω
141μH
141μH
135μH
L
10
C_r
0.021μF
R_L
$V_{in}(f)$
V_{out}

FIG. 2

FIG. 3

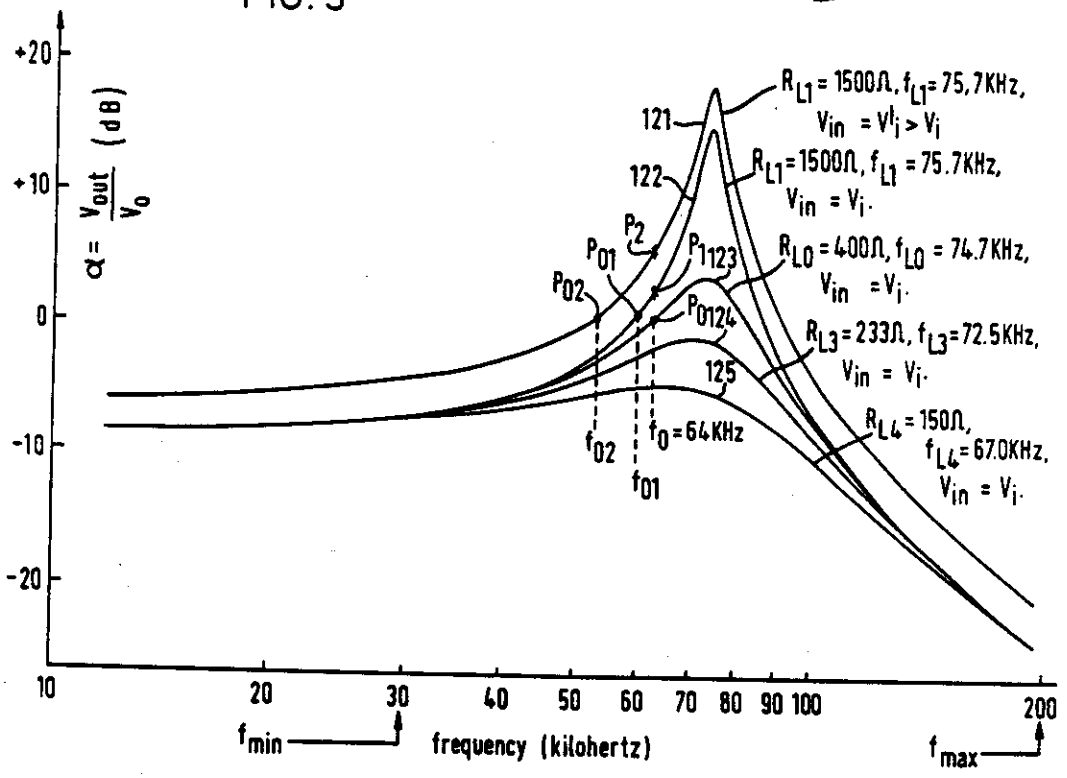
+20
+10
0
-10
-20
$\alpha = \frac{V_{out}}{V_o}$ (dB)
121
122
P_{01}
P_2
P_{02}
P_{1123}
P_{0124}
125
R_{L1} = 1500Ω, f_{L1} = 75.7KHz, $V_{in} = V_i' > V_i$
R_{L1} = 1500Ω, f_{L1} = 75.7KHz, $V_{in} = V_i$
R_{L0} = 400Ω, f_{L0} = 74.7KHz, $V_{in} = V_i$
R_{L3} = 233Ω, f_{L3} = 72.5KHz, $V_{in} = V_i$
R_{L4} = 150Ω, f_{L4} = 67.0KHz, $V_{in} = V_i$
f_{02}
f_0 = 64KHz
f_{01}
10
20
30
40
50
60
70
80
90
100
200
f_{min}
frequency (kilohertz)
f_{max}

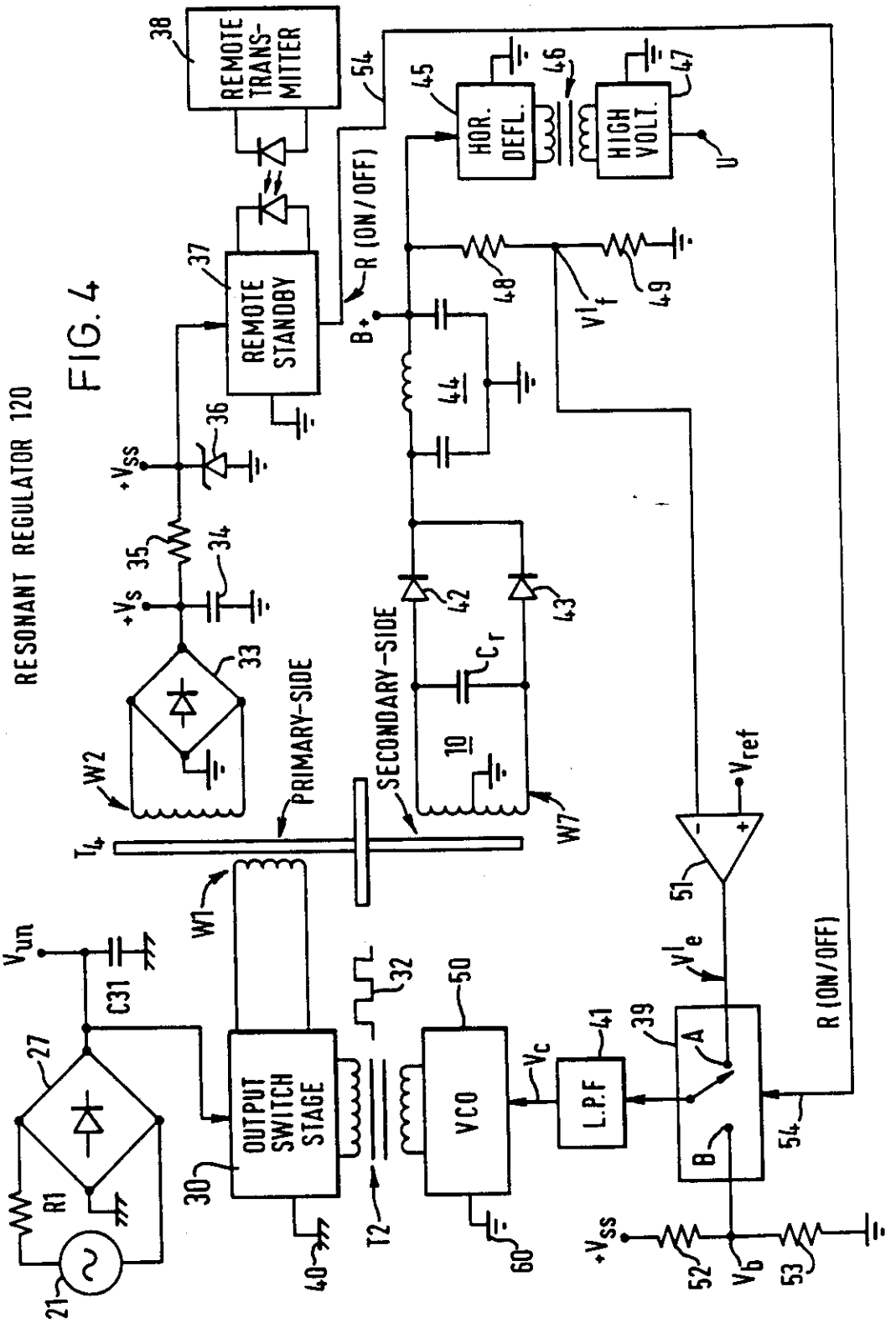

RESONANT REGULATOR 120

FIG. 4

P.C.
ORIGINAL

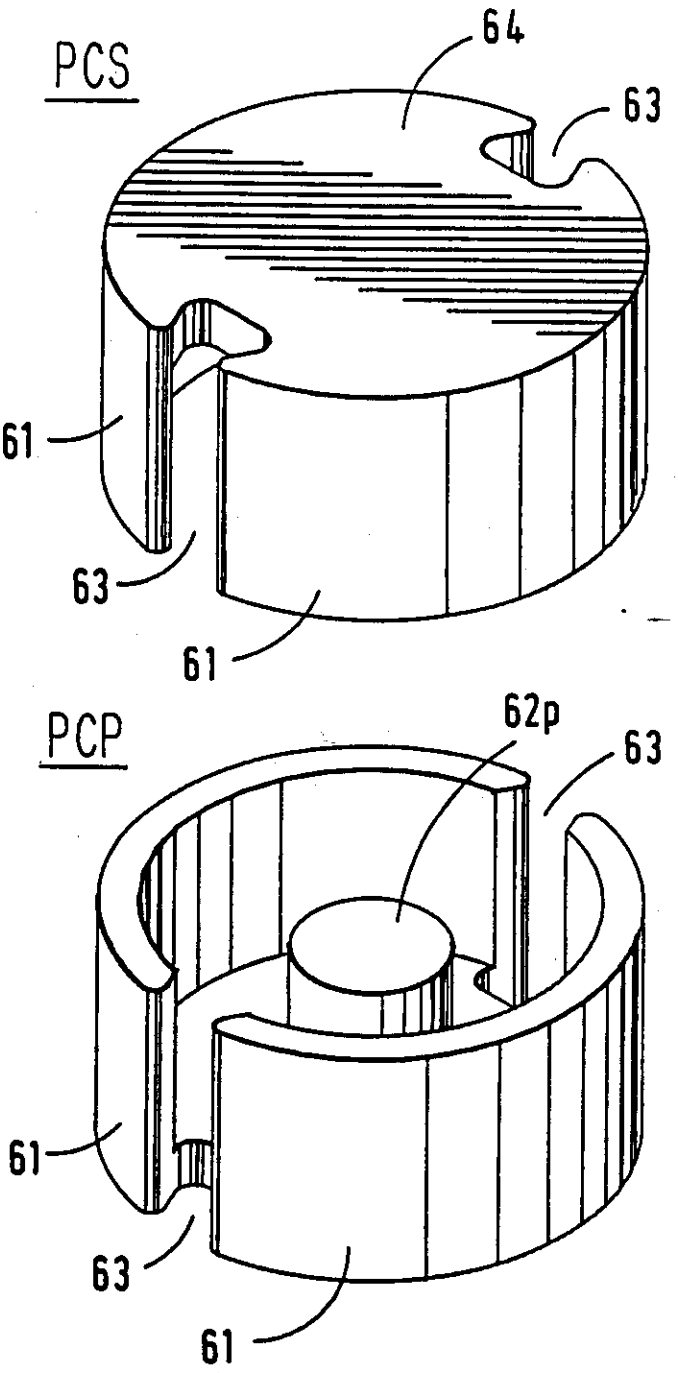

FIG. 5.

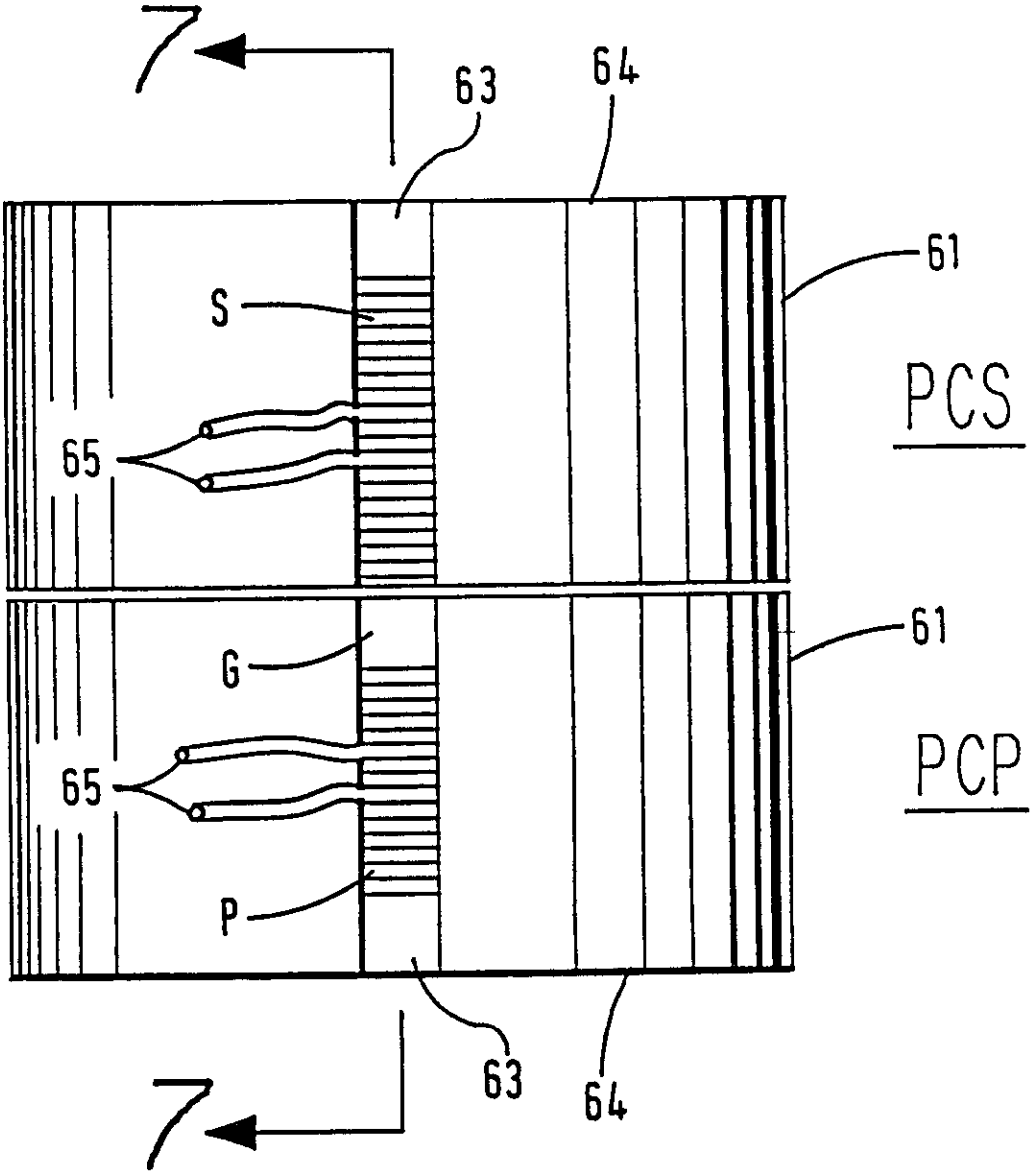

TRANSFORMER T4

FIG. 6.

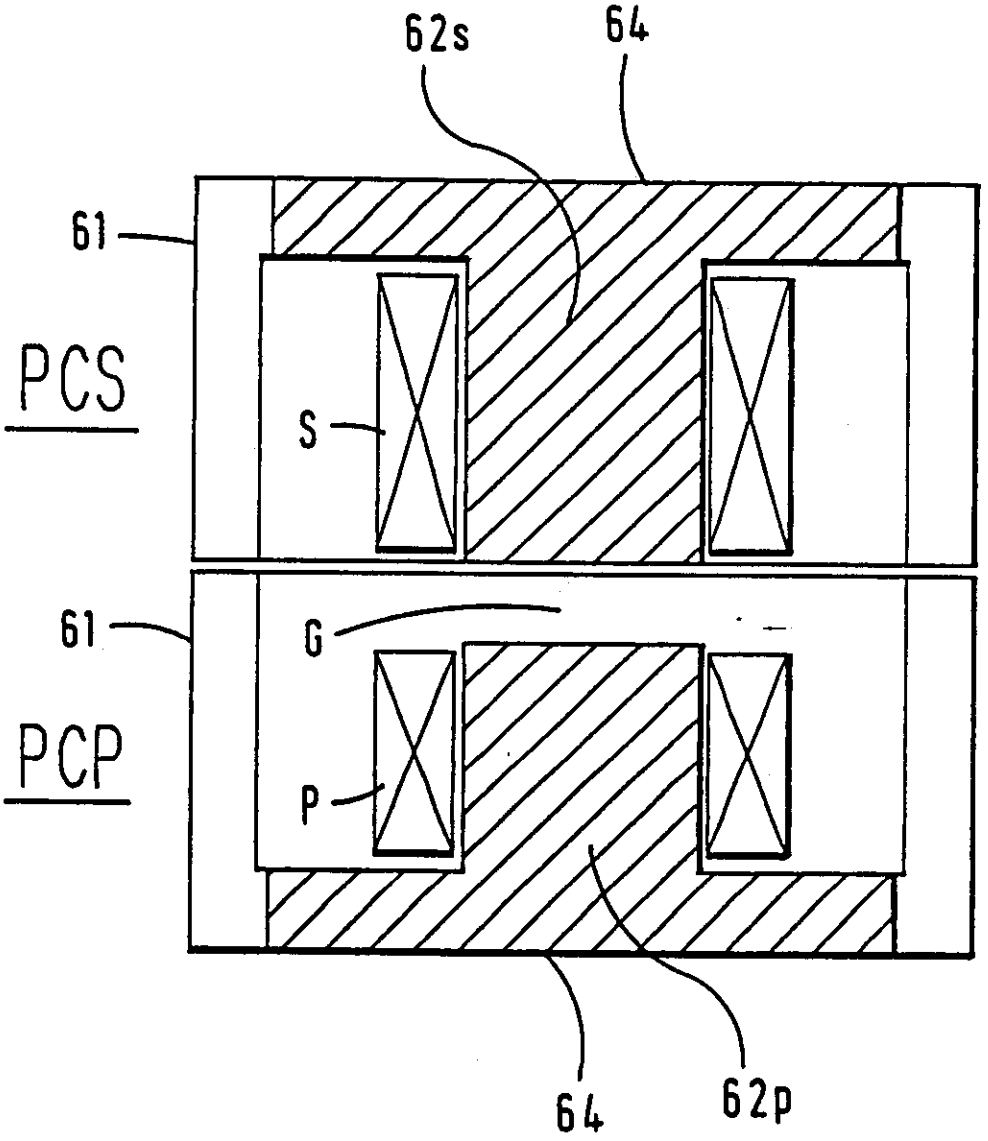

TRANSFORMER T4

FIG. 7.

FREQUENCY CONTROLLED RESONANT REGULATOR

This invention relates to switching regulator power supplies.

Switched mode power supplies may be used to generate supply voltages from an unregulated input voltage. The power supply may include a switching stage coupled to the primary winding of a power transformer for generating output voltages across secondary windings of the transformer. To regulate the output voltages, it is known to pulse-width modulate the switching stage of, for example, a flyback converter type of switched mode power supply.

It is desirable to operate a switching power supply at relatively high frequencies, such as between 50-150 kilohertz, to reduce the size of the associated magnetic components such as the power transformer. At these relatively high frequencies, pulse-width modulating systems have several disadvantages. Electromagnetic interference radiation is increased. Efficiency is reduced due to the increased switching losses. Both of these undesirable aspects result from the large number of harmonics generated by a square wave output. Additionally, in flyback converter types of switching regulators, a relatively large peak reverse voltage stress is applied to the secondary winding output rectifiers. Such peak reverse voltage stress is undesirable for switching power supplies operating at high frequencies and providing high current from low voltage secondary supplies. Such switching power supplies often use Schottky output rectifiers which cannot sustain large peak reverse voltage stresses.

To avoid the disadvantages of pulse width modulators at high operating frequencies, sinewave resonant power converters have been used. In such converters, the power transformer includes relatively tightly coupled primary and secondary windings. A discrete inductor is placed in series with the primary winding and a resonating capacitor is coupled across the

secondary winding. The resonating capacitor tunes essentially with the discrete inductor to form a tuned circuit that produces a generally sinewave output voltage across the secondary winding. The amplitude of the output voltage is determined by the operating frequency of the voltage generator coupled to the primary winding and discrete inductor. To provide regulation, the amplitude of the output voltage is sensed and fed back to the voltage generator to vary the generator's operating frequency.

A feature of the invention is a frequency controlled resonant regulator that incorporates into the power transformer the inductive portion of the regulator tuned circuit. A first winding of a power transformer is coupled to a source of unregulated voltage and to output switching means. A controllable source of switching signals is coupled to the output switching means for operating the switching means at a controllable frequency to generate a first alternating output voltage across a second winding of the power transformer. The power transformer incorporates substantial leakage inductance between the two windings. A resonating capacitance is coupled to the second winding for forming a tuned circuit with the inductance of the transformer. The amplitude of the output voltage is varied by varying the operating frequency of the switching means. A sense signal is coupled to the controllable source for developing a control signal that varies the output frequency to provide regulation of the output voltage. The transformer also has a third auxiliary winding which is more tightly coupled with said first winding than with said second winding for generating a second alternating output voltage having an amplitude that is generally unaffected by substantial changes in the operating point of said tuned circuit. Responsive to that second output voltage, a DC power supply generates a DC voltage having an amplitude that is generally unaffected by substantial changes in the operating point of said tuned circuit and that is available for powering a second load circuit

when said operating point is outside the normal regulation range.

The output voltage versus frequency characteristic of the tuned circuit is a function of operating frequency. The output voltage of the tuned circuit is greatly reduced at operating frequencies that are much higher than the resonant frequency of the tuned circuit. In carrying out the invention, the output voltage versus frequency characteristic of the tuned circuit may be advantageously used to provide standby or auxiliary voltages that are available even when the main regulated output voltages have been removed. Because the inventive resonant regulator incorporates a high leakage transformer, an auxiliary winding may be provided that is tightly coupled to the primary winding but loosely coupled to the regulated secondary winding that is being tuned by the resonanting capacitor. To place the power supply in standby mode of operation, the operating frequency of the voltage generator is increased to a value that places the operating point of the tuned circuit well above resonance. The sinewave output voltage is effectively reduced to insignificant value. However, because the auxiliary winding is tightly coupled to the primary winding the square wave auxiliary voltage that this winding supplies is largely unaffected by the increase in operating frequency. This auxiliary voltage may then be used as a source of standby voltage.

In the accompanying drawings, which illustrate embodiments of the present invention and also of the invention claimed in Divisional Application No. 8814952:

FIGURE 1 illustrates a frequency controlled resonant regulator, embodying the invention;

FIGURE 2 illustrates an electrical equivalent circuit of the resonant power transformer of FIGURE 1;

FIGURE 3 illustrates a family of curves of output voltage verses frequency for the circuit of FIGURE 2;

FIGURE 4 illustrates another frequency controlled resonant regulator, embodying the invention,

used as the power supply for a remote responsive television receiver;

FIGURE 5 illustrates, in exploded perspective view, a pot core that may be advantageously used in the power transformers of FIGURES 1 and 4;

FIGURE 6 illustrates a side elevation view of a pot core transformer including windings that may be advantageously used as the power transformers of FIGURES 1 and 4; and

FIGURE 7 illustrates a cross-sectional view of the transformer of FIGURE 6 viewed through the cross-sectional lines 7-7.

The circuit of FIGURE 1 for drawing clarity is separated into Part A and Part B, with transformer T4 and capacitor C_r being shown in both parts.

A resonant regulator 20, embodying the invention, illustrated in FIGURE 1, includes a high leakage transformer T4 having a primary winding W1 coupled to an output switching stage 30 that includes an upper switching device S1 comprising an output switching field effect transistor Q6, paralleled by an oppositely poled diode D5, and that includes a lower switching device S2 comprising an output switching field effect transistor Q7, paralleled by an oppositely poled diode D6. An unregulated DC voltage source 70 is coupled to primary winding W1 and output switching transistors Q6 and Q7.

Unregulated voltage source 70 comprises a source of alternating current, mains supply voltage 21 coupled between input terminals 23 and 24 of a full wave bridge rectifier 27 via an on-off switch 22 and a current limiting resistor R1. An unregulated direct voltage is developed between output terminal 25 of bridge rectifier 27 and a current return terminal 26 designated as an earth ground 40, not conductively isolated from mains source 21. Filtering of the unregulated direct voltage is provided by the series coupled capacitors C5 and C6 coupled between bridge output terminal 25 and earth ground 40.

Bridge output terminal 25 is coupled to upper switching device S1; lower switching device S2 is coupled to earth ground terminal 40. The upper terminal of primary winding W1 of transformer T4 is coupled to terminal 28, the junction of capacitors C5 and C6, and the lower terminal of winding W1 is coupled through a DC blocking capacitor C10 to switch output terminal 31, at the junction of switches S1 and S2.

The connection of primary winding W1 to the junction of capacitor C5 and C6 enables positive and negative supply voltages $+V_{in}$ and $-V_{in}$ to be alternately applied across the winding during alternate conduction of switches S1 and S2. By providing both polarity input voltages, $\pm V_{in}$, a single primary winding, without center tap, may be used, reducing the reverse voltage stresses on semiconductor switches S1 and S2.

The development of voltages of both polarities by means of bridge rectifier 27 and capacitors C5 and C6 enables resonant regulator 20 to be connected to two different AC main voltage levels. For example, when the AC mains voltage is 220 VAC, the full wave bridge rectifier arrangement described previously is provided. When the AC mains supply voltage is at a lower voltage level, such as 120 VAC, then a jumper wire 29 is used to connect terminal 28 directly to AC mains source 21 at bridge input terminal 24. When jumper wire 29 is in use, diodes D1-D4 form a half-bridge, voltage doubler to develop substantially the same dual polarity voltages, $\pm V_{in}$ developed across respective capacitors C5 and C6, as are developed when a 220 VAC mains voltage source is connected to bridge rectifier 27.

To control the frequency of operation of output switches S1 and S2 of controllable output switching stage 30, a voltage controlled oscillator 50 generates a high frequency, 50% duty cycle switching signal 32 illustratively at a nominal frequency $f=f_o=64$ kilohertz. Switching signal 32 is coupled to the bases of opposite conductivity signal transistors Q1 and Q2, to alternately

switch conduction between the two transistors. The alternate switching of transistors Q1 and Q2 produces square wave voltages across windings W_1 and W_2 of a coupling transformer T2. The square wave voltages across windings W_1 and W_2 are 180 degrees out of phase with each other, when each voltage is referenced relative to the respective undotted terminals of their windings. The square wave voltages across windings W_1 and W_2 are transformer coupled to windings W_3 and W_4 of transformer T2 to produce the alternate switching into conduction of turnoff transistors Q4 and Q5. The collector electrodes of transistors Q4 and Q5 are coupled to the respective gate electrodes of output switching transistors Q6 and Q7.

During the controlled switching of output switches S1 and S2 by the switching signals 32 generated in VCO 50, the alternate turnoff of output switching transistors Q6 and Q7 is provided by the alternate conduction of transistors Q4 and Q5. Assume for example the top output switch S1 is conducting. The unregulated voltage V_{in} developed across capacitor C_5 is applied by switch S1 to primary winding W1 of power transformer T4, with the lower, dotted terminal of the winding being the positive terminal. Forward gate drive voltage for output switching transistor Q6 is supplied from winding W_b of a driver transformer T3 that has a primary winding W_a coupled to a feedback winding W3 of power transformer T4.

To turn off switch S1, the square wave voltage across winding w_3 of transformer T2 turns on transistor Q4 and the oppositely phased square wave voltage across winding w_4 turns off transistor Q5. With transistor Q4 conducting, forward gate voltage for output switching transistor Q6 is removed, turning off transistor Q6.

With transistor Q6 cut off, an opposite polarity voltage is induced across primary winding W1 of transformer T4 making the upper, undotted terminals of primary winding W1 and feedback winding W3 of transformer T4 positive. With a reversal in polarity across winding W1 of transformer T4, diode D6 of switch S2 becomes

conductive, taking up current in winding W_1. The voltage $-V_{in}$ developed across capacitor C6 is applied to primary winding W1 of transformer T4. The reversal in polarity across winding W3 of transformer T4 is coupled via winding W_a of transformer T3 to make the upper, undotted terminal of secondary winding W_c of transformer T3 positive, providing forward drive for output switching transistor Q7. Later in the interval, when current in winding W1 reverses in direction, conduction of the current transfers from diode D6 to transistor Q7.

In this manner, voltage controlled oscillator 50, in combination with output switching stage 30, comprise a voltage generator 80 that develops a 50% duty cycle square wave input voltage that is applied to primary winding W1 of resonant power transformer T4. The frequency of operation of voltage generator 80 is controlled by the operating frequency f of voltage controlled oscillator 50.

Power transformer T4 is constructed as a high leakage inductance transformer with the primary side windings W1 - W3 being relatively tightly coupled to one another and with the secondary side windings W4 - W7 also being tightly coupled to one another but loosely coupled to the primary side windings. The operation of output switching stage 30 generates a square wave alternating polarity voltage across primary winding W1 to develop alternating polarity voltages across primary side windings W2 and W3 and secondary side windings W4 - W7.

The secondary side windings provide rectified and filtered DC supply voltages $+V_0$, $+V_1$, $+V_2$ and $-V_3$, that are referenced to a chassis ground 60 that is conductively isolated from earth ground 40. When resonant regulator 20 is used as a power supply for a video display monitor or television receiver, the secondary side DC supply voltages provide power to such loads as the horizontal deflection and high voltage circuits, powered by the $+V_0$ DC supply, the vertical deflection circuit,

powered by the $+V_1$ DC supply, and the small signal circuitry, powered by the $+V_2$ and $-V_3$ DC supplies.

To regulate the secondary side output voltages against loading changes and against changes in the unregulated voltage developed at bridge rectifier output terminal 25, a resonating or tuning capacitor C_r is coupled across one of the secondary side windings, illustratively across secondary side winding W7. resonating capacitor C_r forms a series tuned circuit with the leakage inductance of power transformer T4 to produce generally sinusoidal alternating output voltages across all the tightly coupled secondary side windings. The amplitude of each of the alternating output voltages is established in accordance with the controllable frequency of operation of voltage generator 80.

FIGURE 2 illustrates a simplified electrical equivalent circuit of high leakage inductance power transformer T4 referred to the primary side and of the resonanting capacitor reflected to the primary side as the capacitance C'_r. The inductance of transformer T4 may be represented as a T-network comprising series inductors L_1 and L_2, and a shunt inductor L coupled to the junction of inductors L_1 and L_2. When a source of alternating input voltage V_{in} is applied to the electrical equivalent circuit of FIGURE 2, an alternating output voltage V_{out} is developed across capacitor C'_r and across a load impedance R_L, where R_L represents the equivalent load impedance, reflected to the primary side, of the load circuits coupled to the secondary side windings W4 - W7. The impedance R_s represents the source impedance of the voltage source V_{in} and the winding resistances of transformer T4.

Assume for simplified explanatory purposes that the input voltage V_{in} is a sinewave voltage of amplitude V_i for producing a sinewave output voltage V_{out} of a nominal amplitude V_0 across a resistive load impedance $R_L = R_{L0}$ for some nominal operating state of the power supply.

Resonating capacitor C'_r forms a series tuned circuit with the T-network inductance (L, L1 and L2), of the electrical equivalent circuit of transformer T4 in FIGURE 2. FIGURE 3 illustrates the output voltage characteristic $\alpha=V_{out}/V_0$ in decibels as a function of operating frequency f, for the electrical equivalent circuit of transformer T4 in FIGURE 2. As illustrated by the family of curves in FIGURE 3, tuned circuit 10 of FIGURE 2 has a resonant frequency f_L that varies slightly as a function of loading, with the resonant frequency increasing as the loading decreases. For example, the resonant frequency f_{L1}, associated with a load resistance R_{L1} is slightly greater than the resonant frequency f_{L3} associated with a smaller load resistor R_{L3}.

The voltage gain α, or equivalently, the amplitude of the output voltage V_{out}, depends on the operating characteristics of the transformer power supply electrical equivalent circuit of FIGURE 2, including the operating frequency f of the voltage V_{in}. For the nominal operating characteristics of, for example, $V_{in}=V_i$ and $R_L=R_{L0}$, the output voltage $V_{out}=V_0$ at a nominal operating frequency of $f=f_0$. The transformer and tuned circuit operating point, given these characteristic values, is located at point P_0 of curve 23 in FIGURE 3.

To regulate the amplitude of the output voltage V_{out} against changes in the load R_L and against changes in the amplitude of the input voltage V_{in}, the operating point of tuned circuit 10 is changed by varying the operating frequency f. For example, assume a decrease in loading from a load resistance R_{L0} to R_{L1}. If the operating frequency remains unchanged at $f=f_0$, then the operating point of tuned circuit 10 of FIGURE 2 changes from point P_0 of curve 123 in FIGURE 3 to the operating point P_1 of curve 122, thereby producing an undesirable increase in output voltage amplitude. To maintain a constant output voltage amplitude when the loading decreases, the operating frequency is decreased from the frequency f_0 to the lower frequency f_{01}. The new

operating point is moved to the point P_{01} of curve 122, keeping the amplitude of the output voltage unchanged.

In a similar manner, the operating frequency f is varied when the input voltage V_{in} changes in amplitude. Curve 121 of FIGURE 3 illustrates the voltage gain α versus frequency f of the transformer power supply of FIGURE 2 for a load $R_L=R_{L1}$ and for an input voltage $V_{in}=V_i'$ that is greater than the voltage V_i associated with curve 122. Thus, to maintain a constant amplitude output voltage, the operating frequency of tuned circuit 10 is decreased from the frequency f_{01} to the frequency f_{02} to move the operating point from P_{01} to the operating point P_{02} having the same output voltage amplitude.

In resonant regulator 20 of FIGURE 1 the operating point of the tuned circuit of transformer T4 is changed to maintain relatively constant secondary side DC supply voltages with changes in unregulated input voltage and with changes in loading by the secondary side load circuits. In FIGURE 1, a sense voltage V_f representative of the regulated DC output voltage $+V_0$, for example, is developed at the junction of voltage dividing resistor R34 and R35, of a regulator control circuit 55. The voltage V_f is coupled to the inverting input terminal of a comparator U4B. The non-inverting input terminal of comparator U4B is grounded. To provide a reference potential for comparator U4B when the non-inverting input terminal is grounded, a negative bias voltage developed across zener diode Z3 is summed with the feedback voltage V_f at the inverting input terminal of comparator U4B.

The error voltage output V_e of comparator U4B is amplified by amplifier U4A, lowpass filtered by an RC network comprising resistor R22 and capacitor C18 and applied as a control voltage V_c to control the operating frequency f of voltage controlled oscillator 50 and voltage generator 80. The biasing of comparator U4A is such that under nominal conditions, a zero error voltage V_e produces an operating frequency f_o for VCO 50.

As the DC output supply voltage $+V_0$ tends to decrease, for example, due to either increased loading or decreased unregulated input voltage, the control voltage V_c increases, to increase the operating frequency f of VCO 50 and voltage generator 80. The operating point of tuned circuit 10 is moved to the right in the voltage gain verses frequency illustration of FIGURE 3, to maintain a constant output voltage.

In accordance with a feature of this embodiment, resonant regulator 20 includes overload protection that is automatically provided by the frequency control circuitry of the regulator. Because resonant power transformer T4 is designed as a series resonant tuned circuit, the resonant output voltages decrease rapidly as the operating frequency f becomes significantly greater than the resonant frequency f_L of the tuned circuit. Consider an overcurrent operating condition where, for example, picture tube arcing results in a short circuit to ground of the final anode electrode. Overload current is then drawn from the $+V_0$ DC supply terminal, causing the supply voltage $+V_0$ to decrease. For a decrease in output voltage $+V_0$, regulator control circuit 55 is designed to increase the frequency of operation f of VCO 50 moving the operating point of tuned circuit 10 to the right. However, under overload conditions the load resistance R_L is substantially decreased resulting in the operating curve changing from a curve such as curve 123 of FIGURE 3 to a curve such as curve 125, having decreased maximum output voltage amplitude, substantially below the amplitude of the output voltage V_0 at the nominal operating point P_0.

Because of this tuned circuit response characteristic of the voltage gain curve under an overload condition, regulator control circuit 55 drives the operating frequency f beyond the resonant frequency f_{L4} of curve 125 in FIGURE 3, in an attempt to overcome the decrease in output voltage $+V_0$. Once the operating frequency is driven above resonance, the output voltage

decreases rapidly as a function of increasing frequency f above the resonance point. Regulator control circuit 55 continues to drive the operating frequency higher until the maximum frequency f_{max} is reached. At this point, the extreme range of frequency operation of resonant control circuit 55 is reached, and the operating frequency of voltage generator 80 is kept at this frequency. One notes that at the overload operating frequency f_{max}, the output voltage V_{out} is substantially below its nominal voltage V_0, decreasing by over 20 decibels in the illustration of FIGURE 3.

The frequency limit f_{max} for overload operation is established by diodes D12 and D18 of FIGURE 1 that are coupled between inverting input terminal 7 and output terminal 11 of comparator U4B. When the feedback voltage V_f decreases substantially under overload conditions, the diodes D12 and D18 become forward biased to clamp the error voltage V_e of comparator U4B to the voltage at the inverting terminal 7. This prevents the error voltage V_e and the operating frequency f from increasing by any further significant amount.

The automatic, high frequency overload type of operation that resonant regulator 20 assumes is advantageously produced by designing the regulator so that the operating point of tuned circuit 10 under normal voltage and load conditions is at a point below resonance in the family of operating curves of FIGURE 3. By designing the operating points to be below resonance, under normal operation, regulator control circuit 55 must drive the operating frequency to the right, to higher frequencies, for increased loading. Thus, when an overload conditions occurs, the operating frequency is driven to the right beyond the resonance frequency, and by means of a positive feedback type of effect, continues to be driven to the right until the overload limit frequency f_{max} is reached.

Additionally, a diode D13 is provided that limits the lowest frequency of operation f_{min} to which

regulator control circuit 55 is capable of driving VCO 50. Diode D13 is poled in a direction opposite to diode D12, with the anode of diode D13 coupled to inverting input terminal 7 of comparator U4B, and the cathode of the dio coupled to output terminal 11. If during start-up or during a fault operating condition the voltage at inverting terminal 7 of comparator U4B decreases greatly, the error voltage V_e at output terminal 11 of comparator U4B also decreases sufficiently to forward bias diode D13. When diode D13 conducts, no further significant decrease in error voltage V_e and operating frequency f can occur. The minimum operating frequency f_{min} is selected so as to keep currents in output switches S1 and S2 and in primary winding W1 of transformer T4 to safe levels.

By providing the resonant inductance for tuned circuit 10 primarily or exclusively as the inductance in a high leakage transformer, auxiliary windings, tightly coupled to primary winding W1, such as auxiliary winding W2, are capable of developing output voltages even when no significant voltages are being developed by the secondary side windings W4-W7. Provided that voltage generator 80 is operating to produce a square wave voltage across primary winding W1, an auxiliary square wave voltage is also developed across winding W2 having a frequency that is determined by the frequency of operation of generator 80. The amplitude of the auxiliary secondary winding voltage is not significantly affected by the frequency of operation of generator 80, nor by the operating point of tuned circuit 10. The amplitude of the auxiliary supply voltage is however unregulated and varies with changes in the amplitude of the unregulated voltage developed at bridge rectifier output terminal 25.

The square wave voltage across auxiliary winding W2 is rectified by a diode D9, filtered by a capacitor C11, and regulated by a zener diode Z1 to generate a regulated, positive auxiliary supply voltage $+V_{ss}$. In a similar manner, a regulated negative auxiliary supply

voltage $-V_{ss}$ is developed from the auxiliary square wave voltage developed across winding W2 by means of rectification by a diode D10, filtering by a capacitor C12, and regulated by a zener diode Z2.

As mentioned previously, the auxiliary supply voltages $\pm V_{ss}$ are developed even when no secondary side output voltages, such as output voltage $+V_0$ are developed. Thus, under overload conditions, when the operating frequency of voltage generator 80 is driven to its upper limit f_{max}, auxiliary supply voltages $\pm V_{ss}$ are available to supply the voltage requirements of the generator. The $+V_{ss}$ supply provides voltage to VCO 50, comparator U4B, amplifier U4A, and signal switching transistors Q1 and Q2. The $-V_{ss}$ supply provides the bias voltage for zener diode Z3 needed for biasing inverting input terminal 7 of comparator U4B.

In the embodiment described, a start-up circuit 90 is provided for resonant regulator 20 to insure reliable and safe start-up of the power supply from the time on-off switch 22 is conductive until steady-state operating conditions have been achieved. When on-off switch 22 is first conductive, voltage begins to be developed at bridge rectifier output terminal 25. Secondary side supply voltages and the auxiliary voltages $\pm V_{ss}$ are absent. VCO 50 is not yet operative to generate switching signal 32 for output switching stage 30.

To initiate the switching of output switching stage 30, a small amount of current is supplied from bridge rectifier output terminal 25 to the gate of, for example, output switching transistor Q6 via a resistor R10. Transistor Q6 turns on to apply voltage to the dotted terminal of primary winding W1 of transformer T4. Feedback winding W3 provides positive feedback to the gate of transistor Q6 via windings W_a and W_b of saturating transformer T3 to make transistor Q6 fully conductive.

The positive feedback provided by winding W3 to the gate of transistor Q6 via winding W_b and to the gate of transistor Q7 via winding W_c enables output switching

stage 30 to form a free running oscillator, free running at a relatively low frequency of, for example, 16 to 20 kilohertz. Switching of conduction between switch S1 and switch S2 occurs when the volt-seconds buildup in the core of saturating transformer T3, produced by the voltage applied to winding W_a by feedback winding W3, saturates the core of transformer T3. Forward gate voltage to the conducting output switching transistor Q6 or Q7, as appropriate, is removed. A reversal in polarity across primary winding W1 and feedback winding W3 of transformer T4 is produced to apply forward gate voltage to the other one of the switching transistors, Q6 or Q7.

During this first phase of start-up, when output switching stage 30 is free running at a relatively low frequency, auxiliary supply voltages $\pm V_{ss}$ are developed because of the tight coupling of auxiliary winding W2 to primary winding W1 of transformer T4. However, at the low, free running frequency that output switching stage 30 is operating, the secondary side output supply voltages are greatly reduced and are ineffective to power their respective load circuits. In contrast, regulator control circuit 55 and VCO 50 derive their supply voltages from auxiliary winding W2 and begin to operate during the first, free running phase of the start-up interval.

To avoid undesirable transient variations in the switching frequency of switching signal 32 as the supply voltages $\pm V_{ss}$ are formed, a signal blocking transistor Q8 is made conductive and shunts the output of VCO 50 to ground, away from signal switching transistors Q1 and Q2. Output switching stage 30 continues to free run until stable auxiliary supply voltages $\pm V_{ss}$ and a stable free running frequency for VCO 50 are established.

To shunt the output of VCO 50 to ground, Q8 is made conductive by receiving base current from the $+V_{ss}$ auxiliary supply terminal via an RC network comprising a resistor R39 coupled between the base terminal of transistor Q8 and chassis ground and a resistor R38 and a capacitor C30 coupled in series between the $+V_{ss}$ supply

terminal and the base of Q8. The time constant associated with resistor R38 and R39 and capacitor C30 establishes the duration of conduction of blocking transistor Q8. The duration is sufficiently long to provide for a stable free running frequency switching signal 32. The emitter of transistor Q8 instead of being grounded directly is grounded via diodes D20-D22 to provide further control of the duration of transistor conduction.

After stable operation of VCO 50 has been achieved, a second phase of start up is entered when blocking transistor Q8 becomes cutoff or non-conductive to enable switching signal 32 to synchronize operation of output switching stage 30. In the second phase of start-up, output switching stage 30 is switched at the nominal free running frequency f_0 of, illustratively 64 kilohertz.

Secondary side output voltages of increasing amplitude begin to develop acrossed secondary side windings W4-W7 of resonant transformer T4. Heavy load currents are initially drawn from the secondary side windings to charge the various load circuit filter capacitances. This initial heavy loading excites tuned circuit 10 of transformer T4 into producing transient oscillations of the output supply voltages, including the $+V_0$ voltage.

To prevent regulator control circuit 55 from erroneously varying the frequency of VCO 50 in response to these transient oscillations, error voltage V_e produced by comparator U4B is prevented from reaching amplifier U4A by blocking transistor Q3. Transistor Q3 is made conductive during the startup interval as soon as the $+V_{ss}$ supply terminal is capable of providing it with sufficient base current via a capacitor C29 and a resistor R36. When transistor Q3 is conductive, output terminal 11 of comparator U4B is coupled to ground and ground potential is applied to the noninverting input terminal of amplifier U4A. When noninverting input terminal of amplifier U4A is at ground potential, the control voltage V_c is established

at a value that permits VCO 50 to operate at its nominal frequency f_0 despite the occurrence of initial, transient oscillations of the DC supply voltage $+V_0$.

Transistor Q3 remains conductive for a duration sufficiently long to permit the transient oscillations of the secondary side supply voltages to stop and to permit steady-state operating conditions to prevail. After the elapse of the second phase of the start-up interval, after transition to steady-state operating conditions has been achieved, blocking transistor Q3 becomes cutoff or non-conductive enabling the normal error voltage V_e to be applied to amplifier U4A to control the frequency of VCO 50 in a normal feedback manner. The duration of conduction of transistor Q3 is determined by the time constant associated with a capacitor C29 and resistors R36 and R37. The time constant is selected to maintain transistor Q3 conductive longer than transistor Q8 and until steady-state operating conditions have been achieved.

FIGURE 4 illustrates a frequency controlled resonant regulator 120, embodying the invention, that provides standby mode and run mode power to a remote controlled television receiver. Items in FIGURES 1 and 4 which are similarly identified function in a similar manner or represent similar quantities.

In FIGURE 4 the AC voltage from mains voltage source 21 is full wave recitified by a bridge rectifier 27 to develop an unregulated DC voltage V_{un} filtered by a capacitor C31. The unregulated voltage is applied to output switching stage 30 of resonant regulator 120 to produce an unregulated, 50% duty cycle, square wave voltage across primary winding W1 of resonant power transformer T4. A regulated secondary side alternating output voltage is developed across winding W7 in accordance with the operating point established for tuned circuit 10 that includes resonating C_r and the inductance of high leakage transformer T4.

The regulated voltage across winding W7 is full wave rectified by diodes 42 and 43 and filtered by an LC filter network 44 to develop a regulated DC voltage at a B+ terminal. The B+ voltage is applied to a horizontal deflection circuit 45 to generate scanning current in the horizontal deflection winding of the television receiver, not illustrated in FIGURE 4. The B+ terminal also supplies power to a high voltage circuit 47, via horizontal deflection circuit 45 and a flyback transformer 46. High voltage circuit 47 provides ultor voltage at a terminal U for the picture tube of the television receiver, not illustrated in FIGURE 4. Additional secondary side supply windings, not illustrated in FIGURE 4, provide low voltage supplies to other television receiver circuits such as the vertical, audio, and small signal circuits.

To regulate the secondary side supply voltages, a feedback voltage V'_f is developed from the B+ voltage by voltage dividing resistors 48 and 49. Feedback voltage V'_f is applied to the inverting input terminal of a comparator 51 to generate a error voltage V'_e that is applied to a contact terminal A of a mode switch 39.

In the run-mode, or full power mode, of television receiver operation, the on-state of an on/off command signal R is developed on a signal line 54 coupled to mode switch 39. During the on-state of command signal R, the arm of mode switch 39 makes contact with terminal A to enable the error voltage V'_e to be passed on to lowpass filter 41. Lowpass filter 41 generates a control voltage V_c for VCO 50 that varies in accordance with the error voltage V'_e.

VCO 50 generates a switching signal 32 at a frequency that is controlled by feedback voltage V'_f. Switching signal 32 is transformer coupled via an isolation signal transformer T2 to synchronize the switching of output switching stage 30 at the frequency of switching signal 32. Regulation of the secondary side output voltages is achieved by varying the frequency of

switching signal 32 in accordance with the feedback voltage V'_f.

The signal state of command signal R is controlled by the output of a conventional remote standby circuit 37. When a user wishes to turn on the television receiver and provide full power to the receiver circuits, the user operates a conventional remote transmitter 38 that sends, for example, an infrared signal that is decoded by standby circuit 37 to switch the state of command signal R to the on-state. When the user wishes to turn off the television receiver and place the receiver in the standby mode of operation, a differently coded infrared signal is received by standby circuit 37 and switches the state of command signal R to the off-state.

In this embodiment, when the off-state of command signal R is developed on signal line 54, the arm of mode switch 39 is moved to make contact with terminal B, decoupling error voltage V'_e from lowpass filter 41. A bias voltage V_b is developed at mode switch terminal B by voltage dividing resistors 52 and 53 coupled between the $+V_{ss}$ auxiliary supply terminal and chassis ground. The value of bias voltage V_b is selected to produce, when coupled by mode switch 39 to lowpass filter 41, a control voltage V_c that operates VCO 50 at its upper limit high frequency operation of $f=f_{max}$ of FIGURE 3.

With resonant regulator 120 being operated during standby at the frequency f_{max}, the operating point of tuned circuit 10 is well above resonance, resulting in the loss of secondary side output voltages, such as the B+ voltage. All the television receiver load circuits powered by the secondary side voltages become inoperative, placing the television receiver in a standby, low power state.

Resonant power transformer T4 provides the required supply voltage to standby circuit 37 in the standby or off-state of the television receiver. Even

though the transformer is being operated at a very high frequency during standby, alternating voltages are being developed by auxiliary winding W2 that is tightly coupled to primary winding W1.

The auxiliary output voltage across winding W2 is full wave rectified by a bridge rectifier 33 and filtered by a capacitor 34 to provide an auxiliary DC voltage $+V_s$ that is unregulated with changes in the mains derived voltage V_{un}. Auxiliary voltage V_s is coupled to a zener diode 36 via a resistor 35 to produce the regulated auxiliary DC voltage $+V_{ss}$ that is developed not only during on-state operation of the television receiver but also during standby operation. Auxiliary supply voltage $+V_{ss}$ is therefore suitable for use by remote standby circuit 37 as a voltage supply that is available during standby mode of operation as well as during run-mode of operation, or in other words, that is available during both states of remote on/off command signal R.

High leakage power transformer T4 may be constructed as a cup core or pot core transformer. Because of the closed core configuration of a pot core, radio frequency interference radiation from the high leakage transformer is kept relatively low. This results in a further reduction in radiation beyond the reduction provided due to the sinewave rather than square wave nature of the output voltages developed by the secondary side windings.

FIGURE 5 illustrates an exploded perspective view of the pot core of power transformer T4. The transformer core comprises two ferrite pot core elements, a pot core element PCP having a center post leg 62p around which the primary side windings W1-W3 of FIGURE 1, for example, are wound, and a pot core element PCS having a center post leg 62s, not illustrated in the perspective view of FIGURE 5, around which the secondary side windings W4-W7 are wound.

In addition to the center post leg 62p or 62s, each of the pot core elements includes a cylindrical wall

or skirt 61 surrounding the center post leg and a solid end wall 64. Each of the pot core elements is provided with gap 63 in cylindrical wall 61 to enable the lead wires of the various primary and secondary side windings to be brought out of the pot core for their connection to the appropriate circuit elements in regulator 20 of FIGURE 1.

FIGURE 6 illustrates pot core transformer T4 in the assembled state including the primary side windings, generally designated as windings P, and the secondary side windings, generally designated as windings S. Also illustrated in FIGURE 6 are representative lead wires 65 that are brought out of the transformer core through gap 63. Not illustrated in FIGURE 6 is the conventional fastening hardware necessary to secure the transformer in its assembled configuration and necessary to secure the transformer to a circuit board or chassis.

FIGURE 7, illustrates in cross-sectional view, the assembled transformer T4 through the cross-sectional line 7-7 of FIGURE 6. In the cross-sectional view of FIGURE 7, one notes that a gap G is provided between primary core center post leg 62p and secondary core center post leg 62s. An alternative way of providing a gap G, not illustrated in the figures, is to use two identical pot core elements PCP and PCS assembled together but separated from each other by an insulating and non-magnetizable spacer having a thickness equal to the desired gap length.

Gap G produces the required loose coupling between the primary side windings P and the secondary side windings S, that provides the tuning leakage inductance of resonant circuit 10 of FIGURES 1 and 4. The loose coupling permits the secondary side winding voltages to be of sinusodial waveform and the primary side winding voltages to be of square wave waveform.

The following is an illustration of a construction for a inventive embodiment of resonant power transformer T4 of FIGURE 1.

Core: Two each, ferrite pot core, manufactured by Ferroxcube Corp., Saugerties, New York, Series 4229, Part Number 4229P-L00-3C8, modified by extending cylindrical wall 61 of each by 0.2 inch (5 mm) and by extending the center post leg 62s by 0.2 inch (5 mm), resulting in a gap G of 0.2 inch (5 mm) being developed when the transformer core is assembled.

Primary Winding W1: 45 turns of litz wire of 400 circular mills (0.203 mm^2) total cross section, with the litz wire formed by 25 strands of 0.004 inch (0.10 mm) diameter enameled copper wire.

Auxiliary Winding W2: nine turns of litz wire of 245 circular mills (0.124 mm^2) total cross-section, with the litz wire formed by 20 strands of 0.0035 inch (0.089 mm) diameter enameled copper wire.

Feedback Winding W3: ten turns of litz wire of 245 circular mills (0.124 mm^2) total cross-section, with the litz wire formed by 20 strands of 0.0035 inch (0.089 mm) diameter copper wire.

Secondary Winding W7: 36 turns, center tapped, of litz wire of 1500 circular mills (0.760 mm^2) total cross section, with the litz wire formed by 60 strands of 0.005 inch (0.127 mm) diameter enameled copper wire.

Secondary Winding W6: two turns of litz wire of 625 circular mills (0.317 mm^2) total cross-section, with the litz wire formed by 25 strands of 0.005 inch (0.127 mm) diameter enameled copper wire.

Secondary Winding W5: three turns of litz wire of 625 circular mills (0.317 mm^2) total cross-section, with the litz wire formed by 25 strands of 0.005 inch (0.127 mm) diameter enameled copper wire.

Secondary Winding W4: eight turns of litz wire of 625 circular mills (0.317 mm^2) total cross-section, with the litz wire formed by 25 strands of 0.005 inch (0.127 mm) diameter enameled copper wire.

Given the above transformer specifications, the following is obtained:

L (primary) = 276 microhenry.

L (secondary) = 196 microhenry.

M (mutual coupling) = 114 microhenry.

k (coefficient of coupling) = 0.49.

Additional values for an arrangement illustrated in FIGURE 1 are as follows:

C_r = 0.03 microfarad, polypropylene.

f_0 = 64 kilohertz, nominal operating frequency.

V_{in} = ±150 volts DC.

Input Power = 140 watts.

Q=5, for tuned circuit 10 at 140 watts load power, to provide extremely high efficiency of around 90%.

Because the inductance of the tuned circuit is obtained primarily or exclusively from the leakage inducatance of the power transformer, no other inductance is needed, such as a discrete inductor, to provide significant inductance to the tuning of the resonant circuit. Because such an arrangement eliminates the need for a discrete inductor, the power transformer construction is simplified, since tight coupling of primary and secondary windings is not required, resulting in substantial economies.

CLAIMS:

1. A frequency controlled resonant regulator comprising:

a source of unregulated voltage;

a power transformer having a first winding coupled to said source;

output switching means coupled to said first winding;

a controllable source of switching signals coupled to said output switching means for operating said switching means at a controllable frequency to generate a first alternating output voltage across a second winding of said power transformer to power a first load circuit, said transformer incorporating leakage inductance between said first and second windings;

a resonanting capacitance coupled to said second winding for forming a tuned circuit with the leakage inductance of said transformer to establish the amplitude of said output voltage in accordance with said controllable frequency;

means coupled to said controllable source and responsive to a sense signal for developing a control signal that varies said controllable frequency in accordance with said sense signal to regulate said first alternating output voltage;

a third winding of said transformer more tightly coupled with said first winding than with said second winding for generating a second alternating output voltage having an amplitude that is generally unaffected by substantial changes in the operating point of said tuned circuit; and

a DC power supply responsive to said second alternating output voltage for generating a DC voltage having an amplitude that is generally unaffected by substantial changes in the operating point of said tuned circuit and that is available for powering a second load

circuit when said operating point is outside the normal regulation range.

2. A regulator according to claim 1 wherein said second load circuit comprises a controllable oscillator within said controllable source for generating said switching signals in accordance with the frequency of said oscillator and wherein during an overload condition, said controllable oscillator is operated at a frequency that places the operating point of said tuned circuit outside the normal regulation range to substantially reduce the amplitude of said first alternating output voltage, said DC voltage powering said controllable oscillator during said overload condition.

3. A regulator according to claim 2 wherein the core of said transformer comprises two pot core sections, said first winding being located on the center leg post of said first core section and said second winding being located on the center leg post of said second core section.

4. A regulator according to claim 1 wherein said DC voltage energizes a standby circuit, said standby circuit developing an on-off command signal that is coupled to said controllable source of switching signals such that, during the off-state of said command signal, the frequency of said switching signals places the operating point of said tuned circuit outside said normal regulation range to place said load circuit in a standby condition.

5. A regulator according to claim 1, wherein during normal operation of said regulator, said controllable source of switching signals varies said controllable frequency in a range of frequencies that maintains the operating point of said tuned circuit below resonance.

6. A regulator according to claim 5 wherein during an overload condition, said controllable source of switching signals produces switching signals having a controllable frequency that places the operating point of said tuned circuit substantially above resonance to substantially reduce the amplitude of said first alternating output voltage.

7. A regulator, or television circuit embodying such regulator, substantially as hereinbefore described with reference to the accompanying drawings.

REGISTER ENTRY FOR GB2169424

P n 1 Application No GB8528652.4 filing date 21.11.1985

Priority claimed:
30.11.1984 in United States of America - doc: 676821

Divisional GB8814952.1

Title FREQUENCY CONTROLLED RESONANT REGULATOR

Applicant/Proprietor
RCA CORPORATION, Incorporated in USA - Delaware, 201 Washington Road, Princeton, New Jersey 08540, United States of America
[ADP No. 00697417003]

Inventor
FRANK STARR WENDT, 245 Fisher Place, Princeton, New Jersey 08540, United States of America
[ADP No. 02968857001]

Classified to
G3U H1T H2H U1S
H02M H04N

Address for Service
T I M SMITH, RCA INTERNATIONAL, Norfolk House, 31 St. James's Square, London, SW1Y 4JR, United Kingdom
[ADP No. 00002279002]

Publication No GB2169424 dated 09.07.1986

Examination requested 11.12.1986

Patent Granted with effect from 21.06.1989 (Section 25(1)) with title
FREQUENCY CONTROLLED RESONANT REGULATOR

29.03.1988 Section 32 Application filed
Entry Type 10.1 Staff ID. BUG1 Auth ID. BACK

12.04.1989 Notification of change of Address For Service address of
T I M SMITH, RCA INTERNATIONAL, Norfolk House, 31 St. James's Square, London, SW1Y 4JR, United Kingdom [ADP No. 00002279002]
to
T I M SMITH, GENERAL ELECTRIC TECHNICAL SERVICES COMPANY INC, London Patent Operation, Burdett House, 15-16 Buckingham Street, LONDON, WC2N 6DU, United Kingdom [ADP No. 00002279003]
dated 07.10.1988. Official evidence filed on 8528652.4
Entry Type 7.3 Staff ID. 4FO2 Auth ID. EO

31.05.1989 RCA LICENSING CORPORATION, Incorporated in USA - Delaware, Two Independence Way, Princetown, New Jersey 08540, United States of America
[ADP No. 04179081001]
registered as Applicant/Proprietor in place of
RCA CORPORATION, Incorporated in USA - Delaware, 201 Washington Road, Princeton, New Jersey 08540, United States of America
[ADP No. 00697417003]
by virtue of deed of assignment dated 08.12.1987. Certified copy filed on GB2198311
Entry Type 8.4 Staff ID. WE1 Auth ID. F21

08.06.1992 Notification of change of Address For Service address of
T I M SMITH, GENERAL ELECTRIC TECHNICAL SERVICES COMPANY INC, London Patent Operation, Burdett House, 15-16 Buckingham Street, LONDON, WC2N 6DU, United Kingdom [ADP No. 00002279003]
to
R W PRATT, GENERAL ELECTRIC TECHNICAL SERVICES COMPANY INC, London Patent Operation, Essex House, 12-13 Essex Street, LONDON, WC2R 3AA, United Kingdom [ADP No. 00003954005]
dated 01.04.1992. Official evidence filed on GB9206626.5
Entry Type 7.3 Staff ID. TR Auth ID. EG

15.03.1993 Application under Section 32 filed on 11.03.1993
Entry Type 8.1 Staff ID. KH1 Auth ID. F20

16.03.1993 Notification of change of Applicant/Proprietor name of
RCA LICENSING CORPORATION, Incorporated in USA - Delaware, Two Independence Way, Princetown, New Jersey 08540, United States of America [ADP No. 04179081001]
to
RCA THOMSON LICENSING CORPORATION, Incorporated in USA - Delaware, 2 Independence Way, Princeton, New Jersey 08540, United States of America [ADP No. 05964408001]
dated 30.06.1991. Official evidence filed on GB2215154
Entry Type 7.2 Staff ID. MM Auth ID. F20

**** END OF REGISTER ENTRY ****

RENEWAL DETAILS

PUBLICATION NUMBER GB2169424

PROPRIETOR(S)

RCA Thomson Licensing Corporation, Incorporated in USA - Delaware, 2 Independence Way, Princeton, New Jersey 08540, United States of America

DATE FILED	21.11.1985
DATE GRANTED	21.06.1989
DATE NEXT RENEWAL DUE	21.11.1994
DATE NOT IN FORCE	
DATE OF LAST RENEWAL	27.10.1993
YEAR OF LAST RENEWAL	09
STATUS	PATENT IN FORCE