US00D512097S

(12) **United States Design Patent** (10) **Patent No.: US D512,097 S**
**Chudek et al.** (45) **Date of Patent: ** Nov. 29, 2005**

(54) **BEAM COMPASS**

(75) Inventors: **Chris Chudek**, Atlanta, GA (US); **Marta Phillips**, Fairfield, CT (US)

(73) Assignee: **Acme United Corporation**, Fairfield, CT (US)

(**) Term: **14 Years**

(21) Appl. No.: **29/188,202**

(22) Filed: **Aug. 14, 2003**

(51) **LOC (8) Cl.** ..... **19-06**
(52) **U.S. Cl.** ..... **D19/38**
(58) **Field of Search** ..... D19/35, 36, 37, D19/38, 39, 40, 65; 401/52, 195, 131, 88; 33/27.01, 27.02, 27.03, 27.031, 27.04, 30.1, 558.5, 558.01–558.06, 558.07

(56) **References Cited**

U.S. PATENT DOCUMENTS

| | | | | | |
|---|---|---|---|---|---|
| 760,353 | A | * | 5/1904 | Stone | 33/27.031 |
| 957,238 | A | * | 5/1910 | Murphy | 33/27.03 |
| 1,670,509 | A | * | 5/1928 | Jung | 33/27.03 |
| D105,522 | S | * | 8/1937 | Hauser | D19/38 |
| D135,353 | S | * | 3/1943 | Gile | D19/38 |
| 2,385,723 | A | * | 9/1945 | Oehrli | 33/27.03 |
| D142,573 | S | * | 10/1945 | Mahler | D19/38 |
| 2,832,141 | A | * | 4/1958 | Taylor | 33/27.03 |
| D218,478 | S | * | 8/1970 | Novak | D19/38 |
| 3,925,898 | A | * | 12/1975 | Melnik | 33/27.03 |
| 5,235,754 | A | * | 8/1993 | Sirois | 33/27.03 |

* cited by examiner

*Primary Examiner*—Martie K. Holtje
(74) *Attorney, Agent, or Firm*—Whyte Hirschboeck Dudek SC

(57) **CLAIM**

The ornamental design for a beam compass, as shown and described.

**DESCRIPTION**

FIG. **1** is a front perspective view of the beam compass according to the present invention;
FIG. **2** is a rear perspective view, rotated 180 degrees from the view of FIG. **1**, of the beam compass of FIG. **1**;
FIG. **3** is a front plan view of the beam compass of FIG. **1**;
FIG. **4** is a rear view of the beam compass, rotated 180 degrees from the view of FIG. **3**, of the beam compass of FIG. **1**;
FIG. **5** is a top view of the beam compass of FIG. **1**;
FIG. **6** is a bottom view, opposite the view of FIG. **5**, of the beam compass of FIG. **1**;
FIG. **7** is a first end view of the beam compass of FIG. **1**; and,
FIG. **8** is a second end view, opposite the view of FIG. **7**, of the beam compass of FIG. **1**.
The pencil depicted by means of broken lines in FIG. **1** has been shown for illustrative purposes only and forms no part of the claimed design.

**1 Claim, 5 Drawing Sheets**

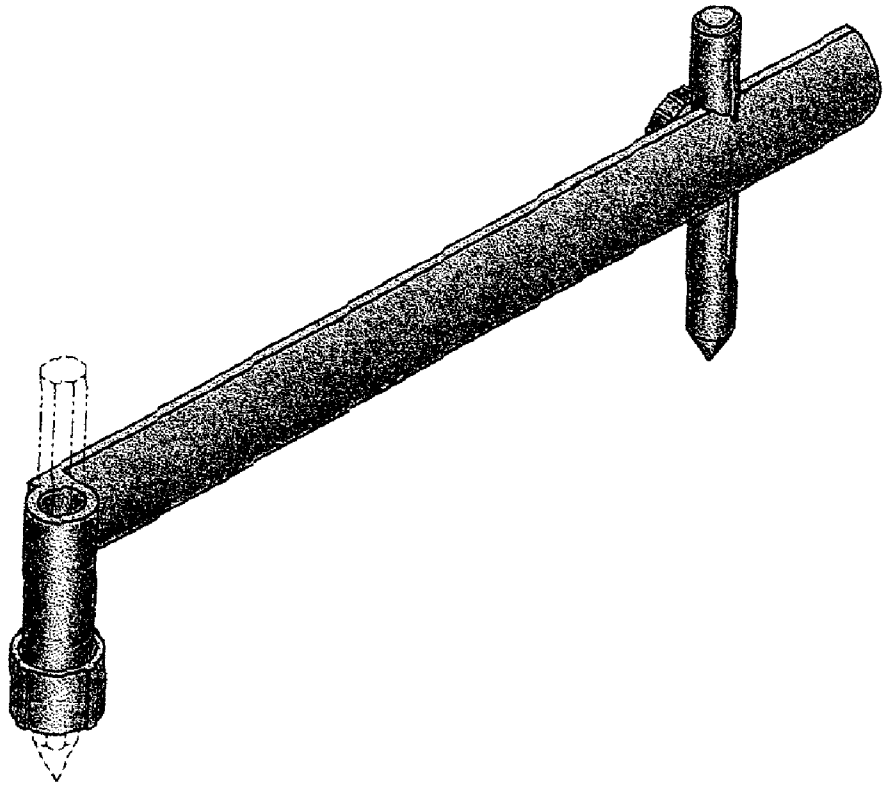

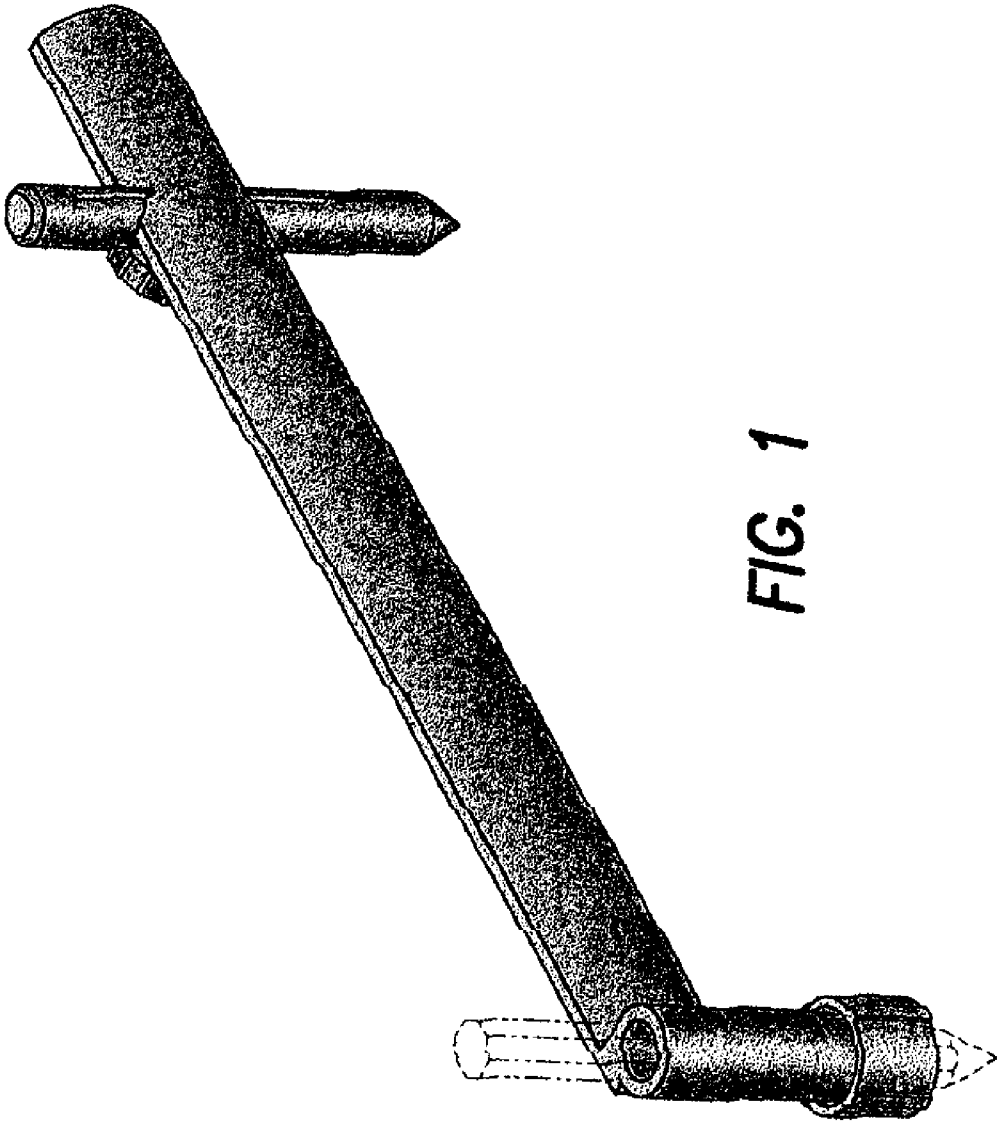

FIG. 1

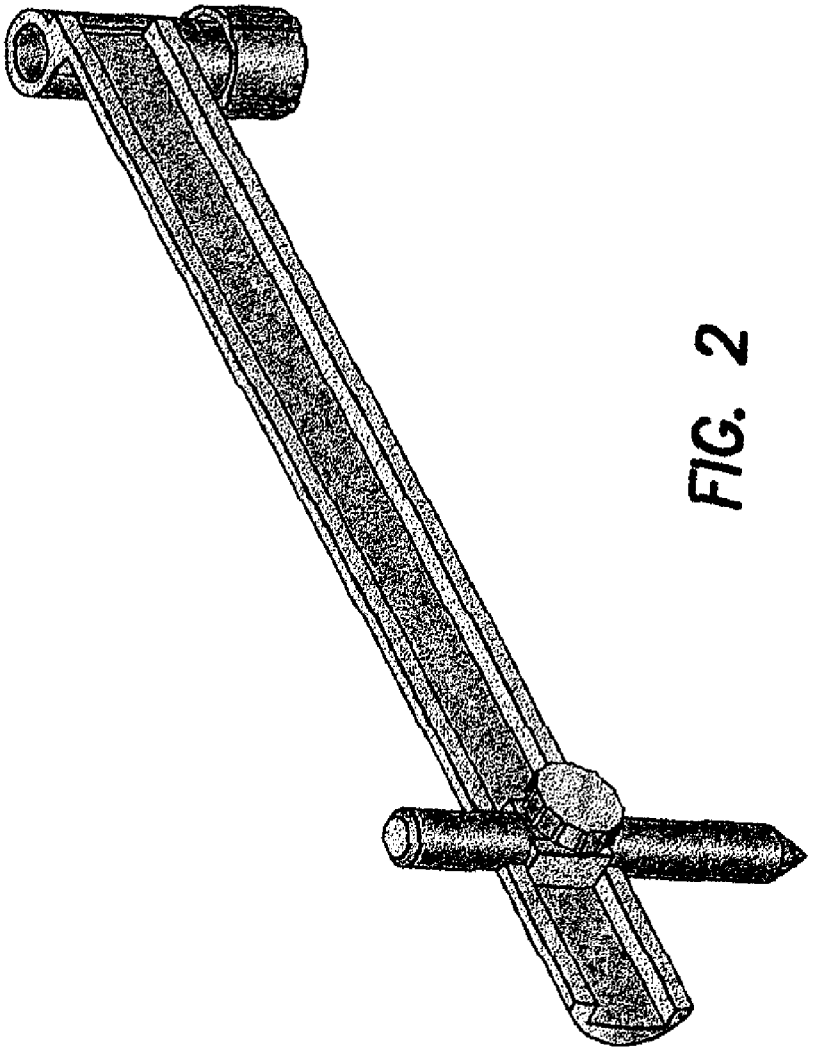

FIG. 2

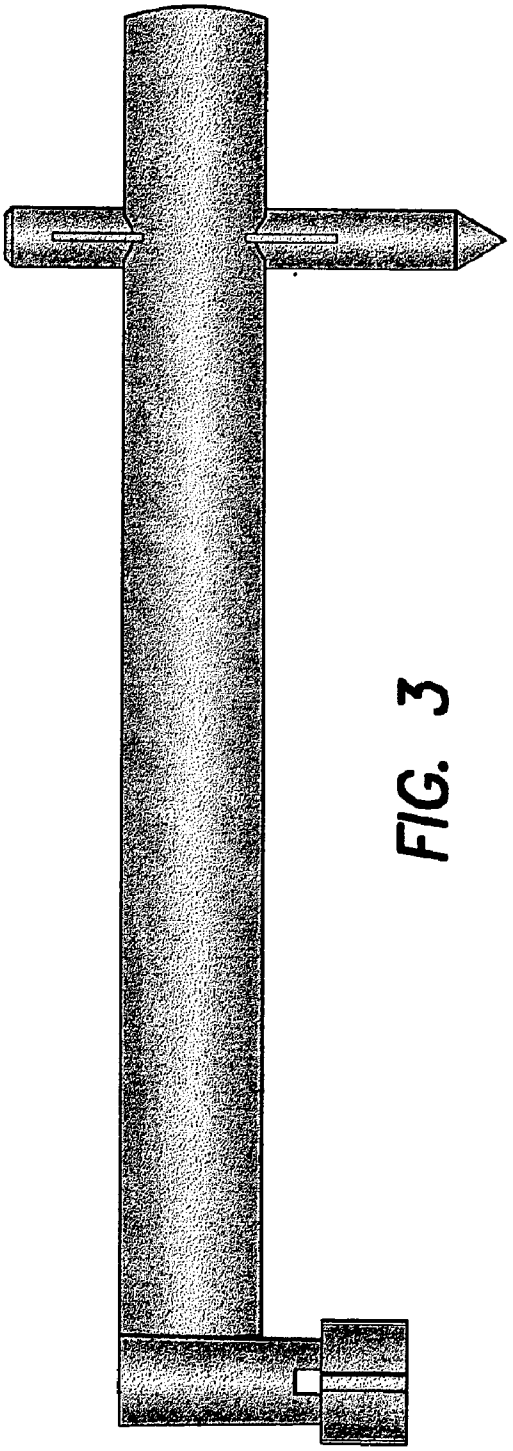

FIG. 3

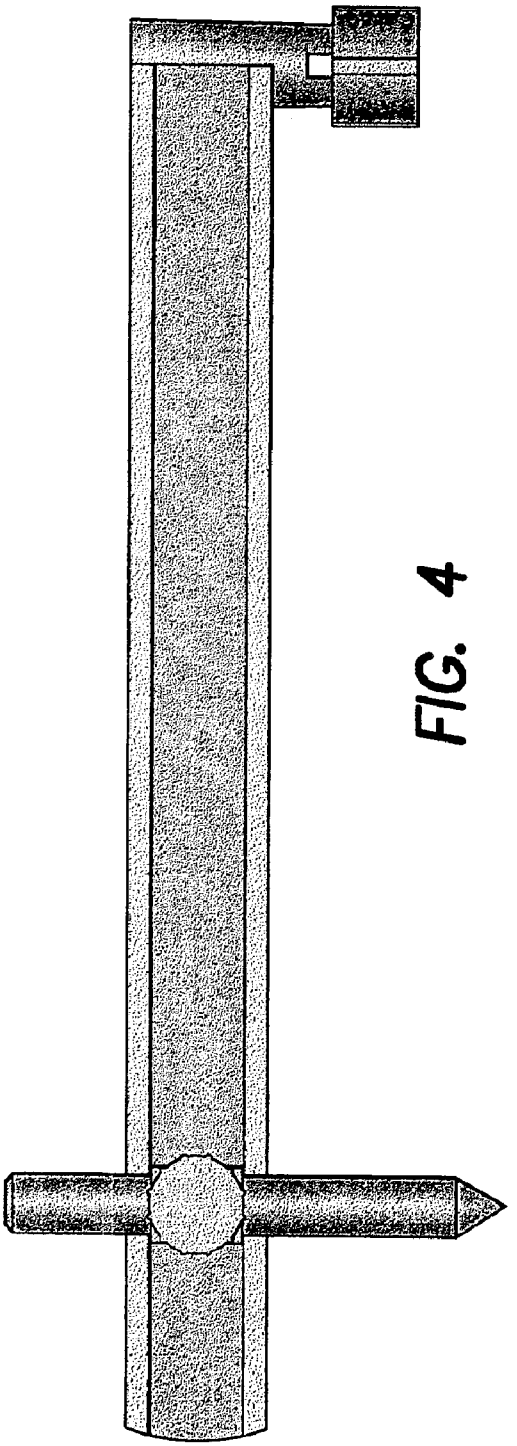

FIG. 4

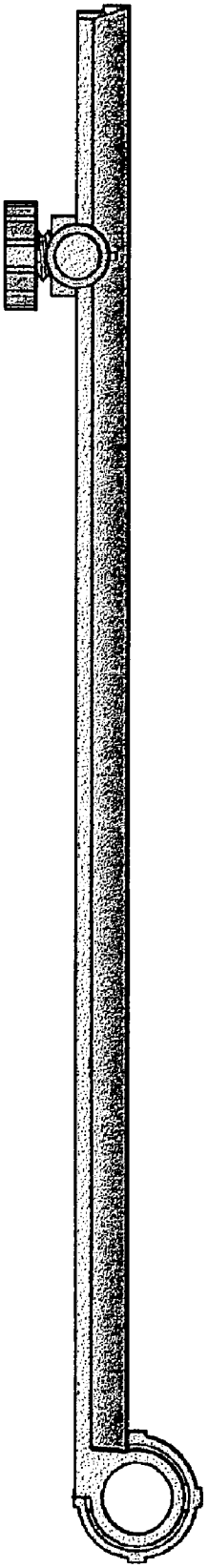

FIG. 5

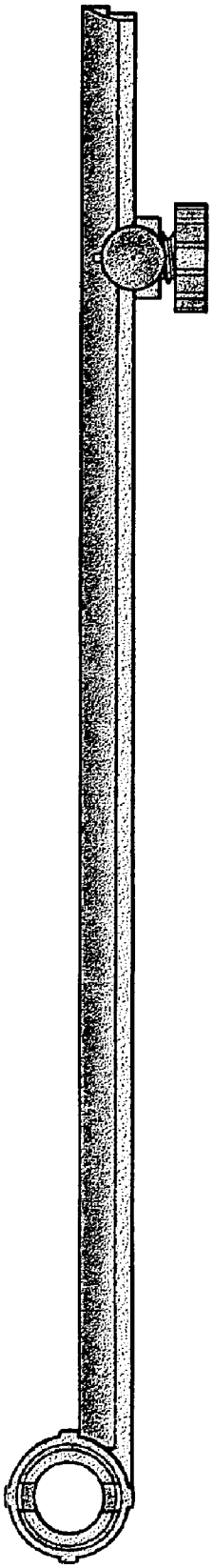

FIG. 6

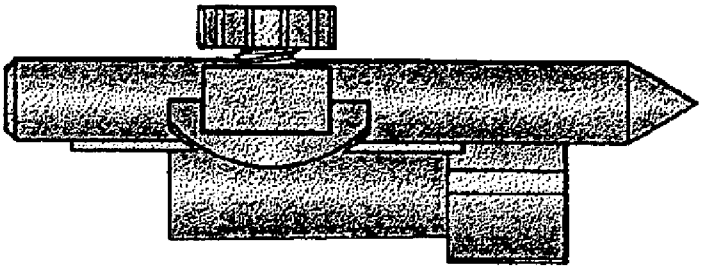

FIG. 8

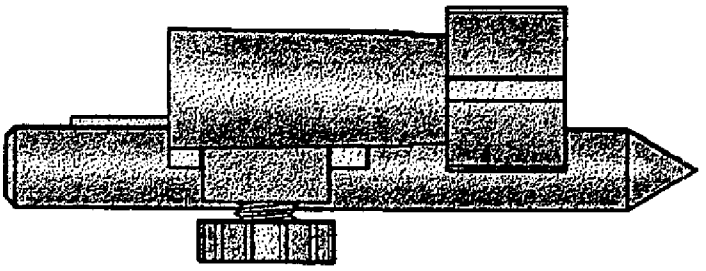

FIG. 7