July 27, 1926. 1,594,171

J. J. GROBE

X-RAY APPARATUS

Filed Sept. 10, 1920 9 Sheets-Sheet 1

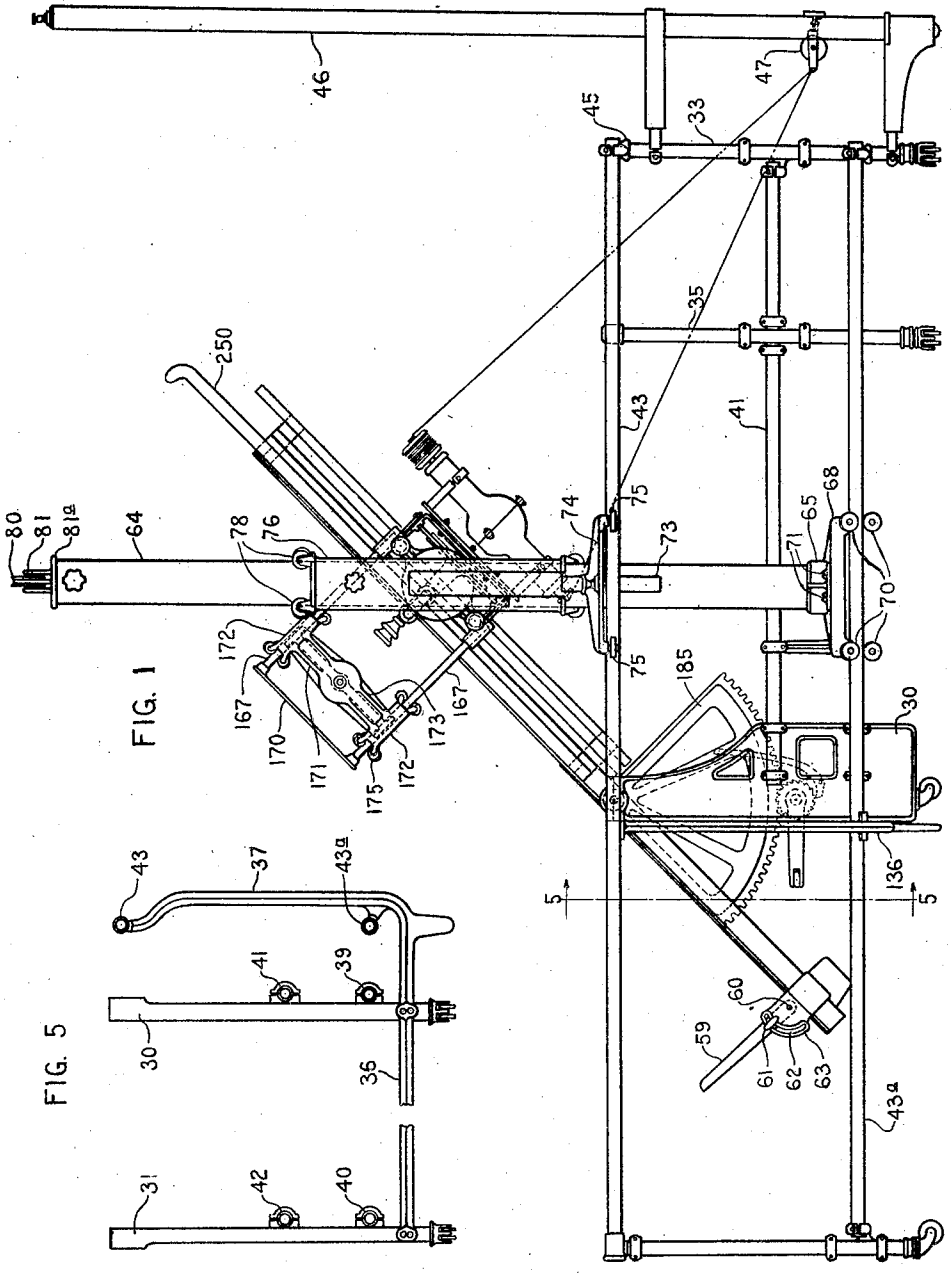

FIG. 1

FIG. 5

INVENTOR:
Julius J. Grobe,
BY
Dyrenforth, Lee, Christon and Wiles,
ATTORNEYS.

July 27, 1926. 1,594,171

J. J. GROBE

X-RAY APPARATUS

Filed Sept. 10, 1920 9 Sheets-Sheet 2

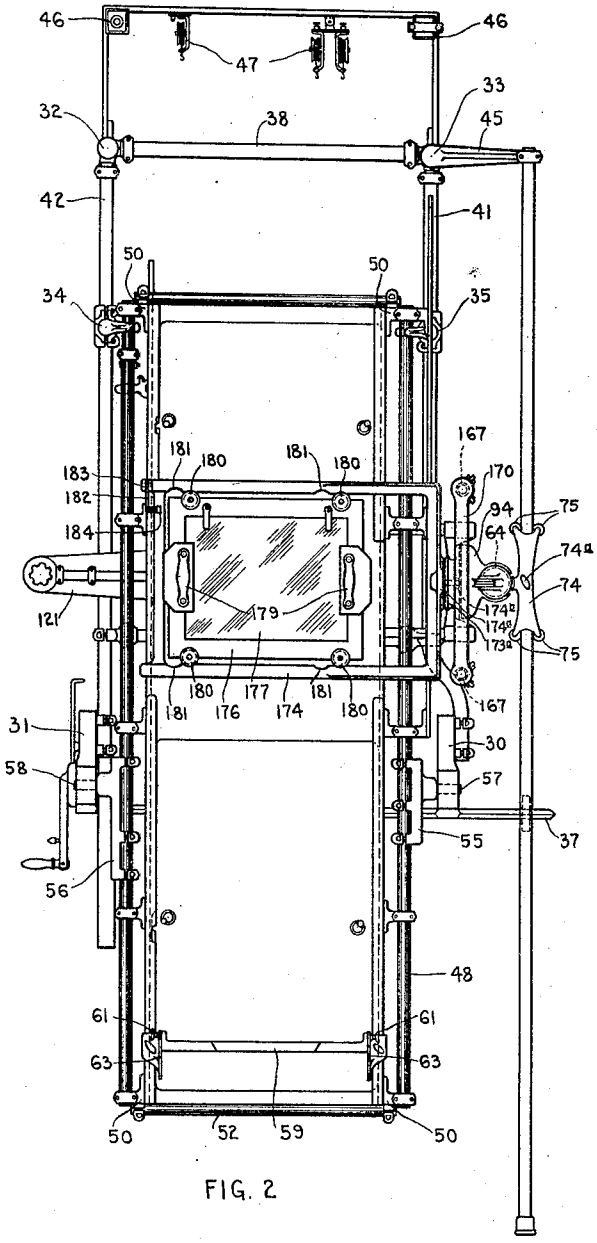

FIG. 2

INVENTOR.
Julius J. Grobe,
BY
Dyrenforth, Lee, Chritton & Wales,
ATTORNEYS.

July 27, 1926.

1,594,171

J. J. GROBE

X-RAY APPARATUS

Filed Sept. 10, 1920

9 Sheets-Sheet 3

FIG. 3

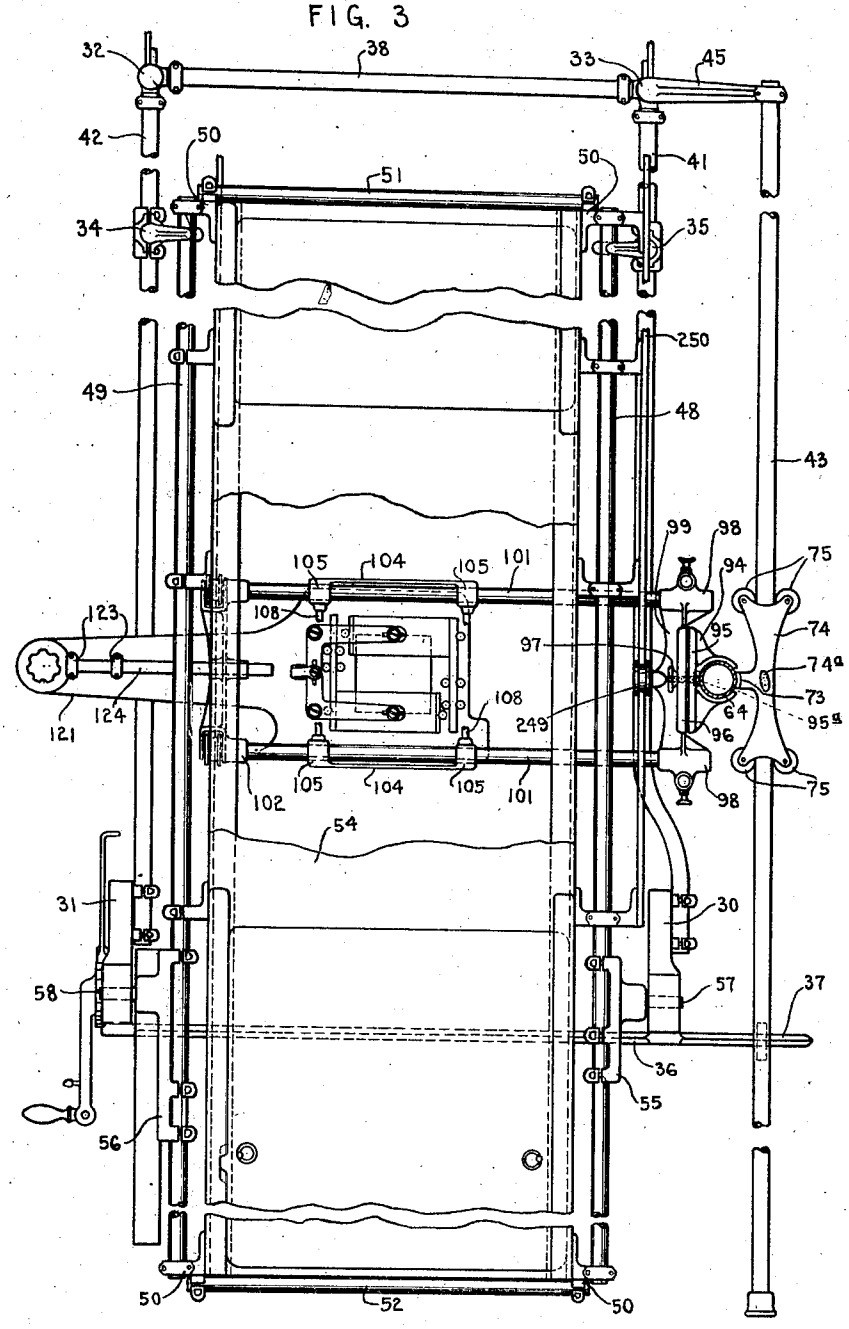

INVENTOR:
Julius J. Grobe,
BY
Dyrenforth, Lee, Christton and Weiler,
ATTORNEYS.

July 27, 1926.

1,594,171

J. J. GROBE

X-RAY APPARATUS

Filed Sept. 10, 1920

9 Sheets-Sheet 4

FIG. 6

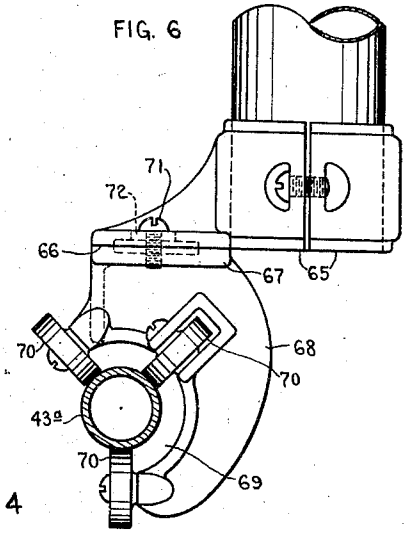

FIG. 4

INVENTOR,
Julius J. Grobe,
BY
Dyrenforth, Lee, Chritton and Wiles,
ATTORNEYS.

July 27, 1926. 1,594,171

J. J. GROBE

X-RAY APPARATUS

Filed Sept. 10, 1920 9 Sheets-Sheet 5

FIG. 7

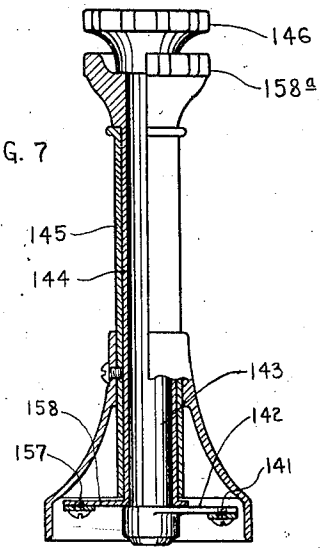

FIG. 8

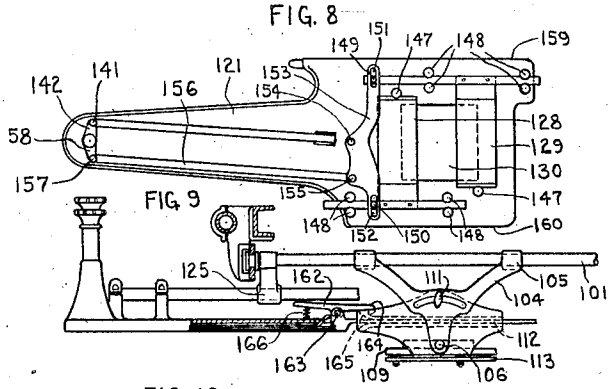

FIG. 9

FIG. 10

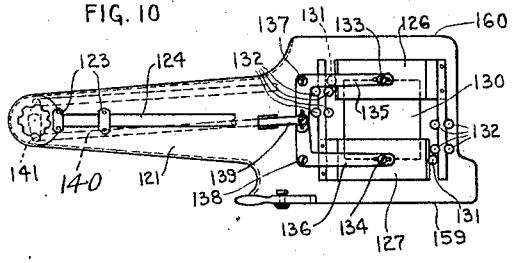

FIG. 11

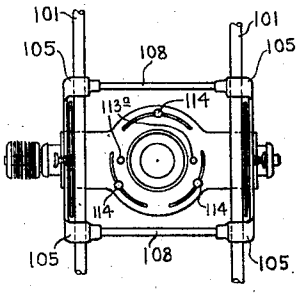

FIG. 12

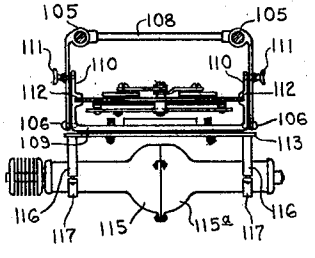

INVENTOR:
Julius J. Grobe,
BY
Dyrenforth, Lee, Chritton and Wiles,
ATTORNEYS.

July 27, 1926.

1,594,171

J. J. GROBE

X-RAY APPARATUS

Filed Sept. 10, 1920 9 Sheets-Sheet 6

FIG. 14

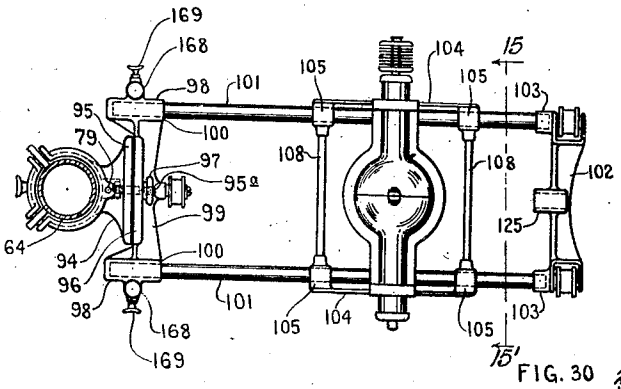

FIG. 15

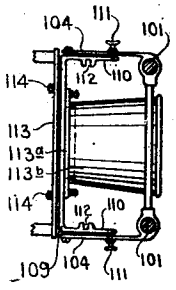

FIG. 30

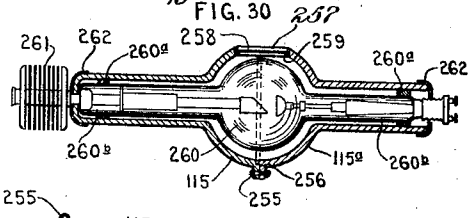

FIG. 13

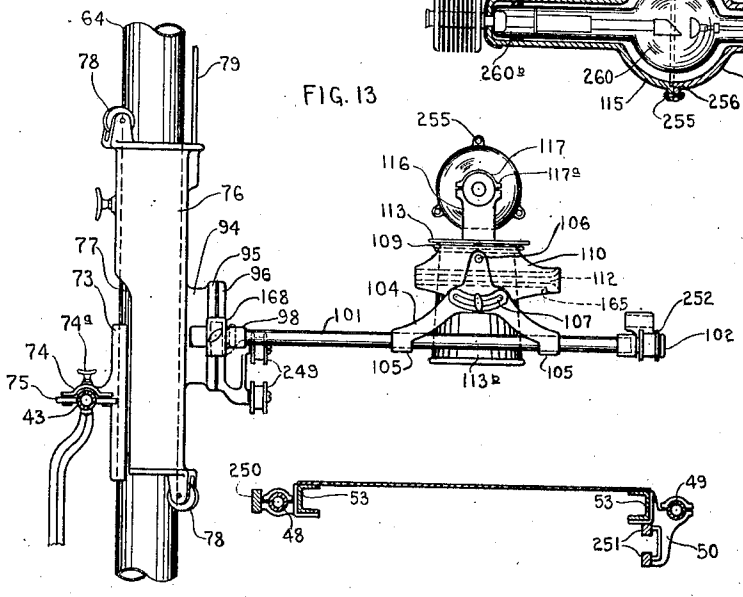

INVENTOR.
Julius J. Grobe,
BY
Dyrenforth, Lee, Christy and Wiles,
ATTORNEY.

July 27, 1926. 1,594,171

J. J. GROBE

X-RAY APPARATUS

Filed Sept. 10, 1920 9 Sheets-Sheet 7

FIG. 16

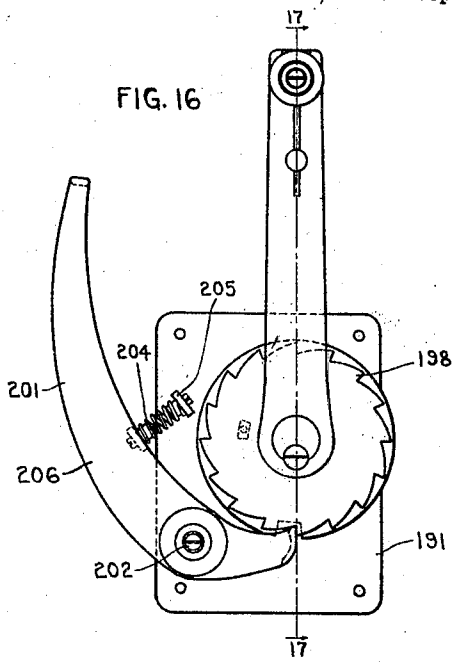

FIG. 17

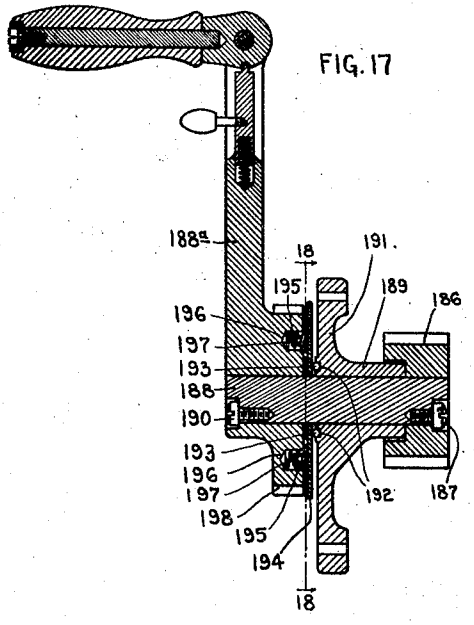

FIG. 18

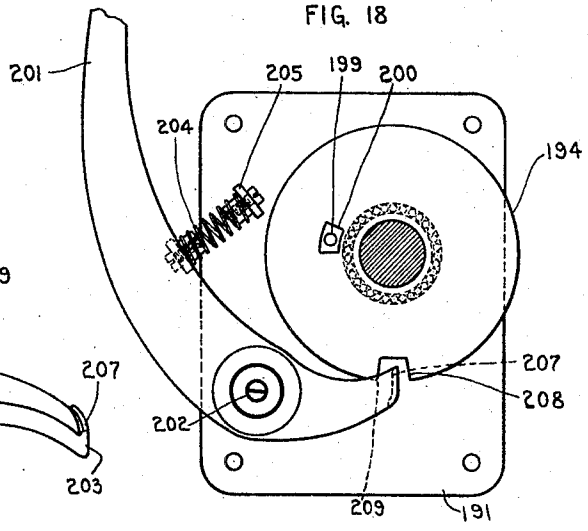

FIG. 19

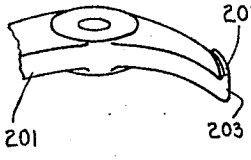

Inventor;

Julius J. Grobe,

Dyer, Foith, Lee, Clinton and Wiles,

Attorneys

July 27, 1926. 1,594,171

J. J. GROBE

X-RAY APPARATUS

Filed Sept. 10, 1920 9 Sheets-Sheet 8

FIG. 20

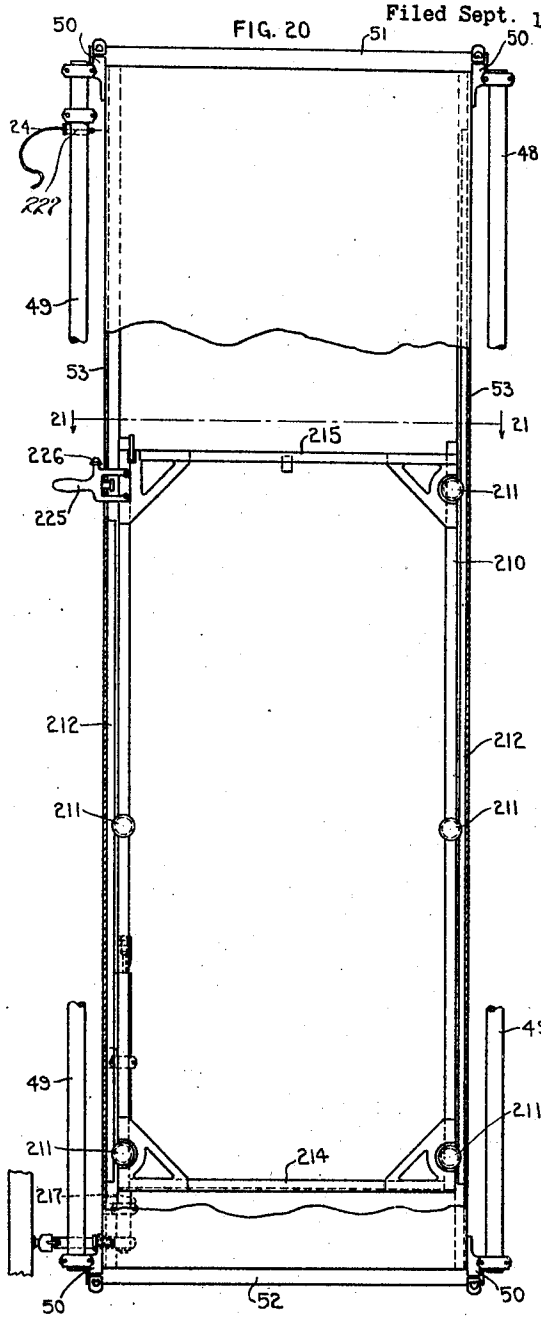

FIG. 21

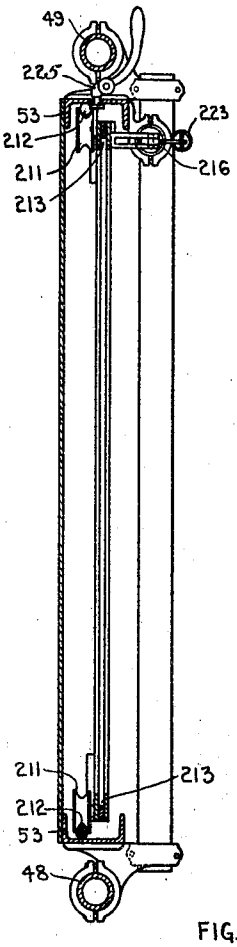

FIG. 23

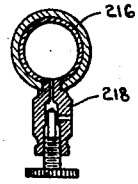

FIG. 22

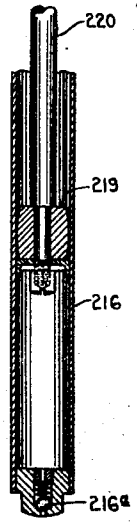

FIG. 24

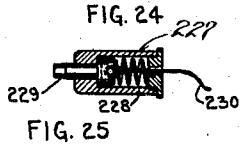

FIG. 25

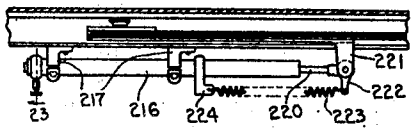

INVENTOR:
Julius J. Grobe,
BY
Dyrenforth, Lee, Chrisman & Miles,
ATTORNEYS.

July 27, 1926. 1,594,171

J. J. GROBE

X-RAY APPARATUS

Filed Sept. 10, 1920 9 Sheets-Sheet 9

FIG. 26

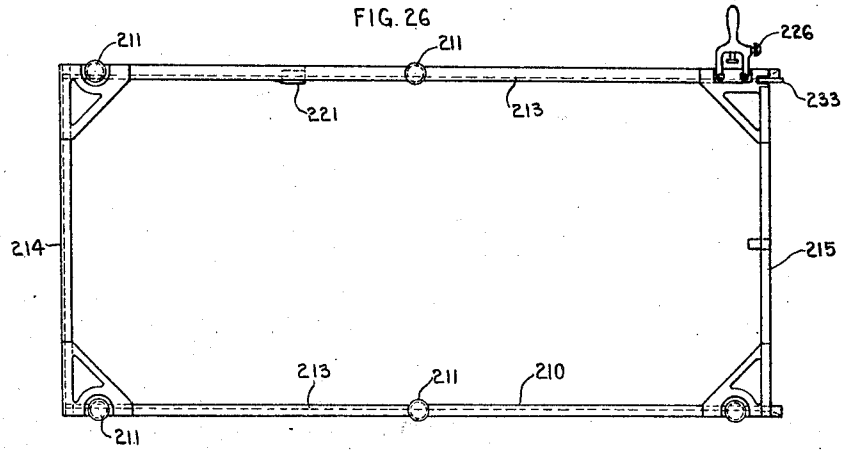

FIG. 27

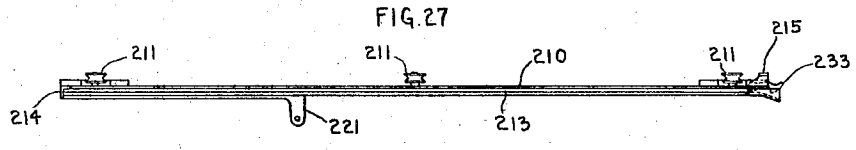

FIG. 28

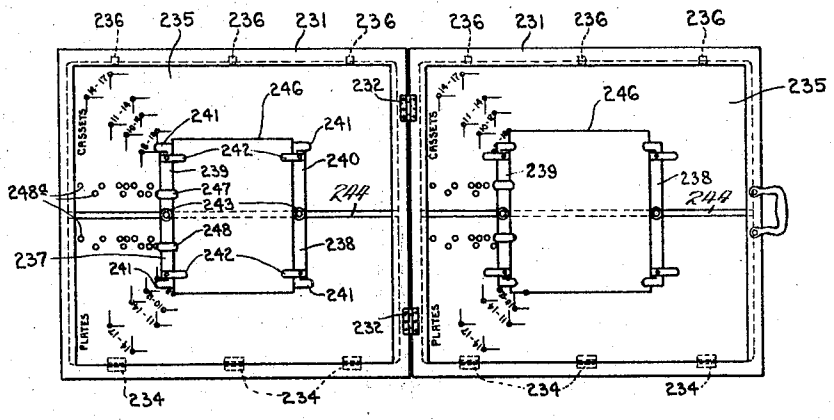

FIG. 29

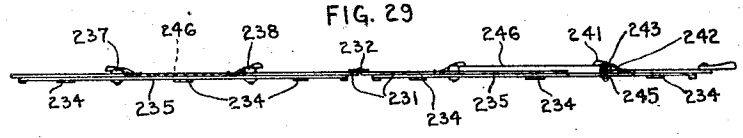

INVENTOR:
Julius J. Grobe,
BY
Dyrenforth, Lee, Chritton and Wiles,
ATTORNEYS.

Patented July 27, 1926. 1,594,171

UNITED STATES PATENT OFFICE.

JULIUS J. GROBE, OF CHICAGO, ILLINOIS, ASSIGNOR TO VICTOR X-RAY CORPORATION, OF CHICAGO, ILLINOIS, A CORPORATION OF NEW YORK.

X-RAY APPARATUS.

Application filed September 10, 1920. Serial No. 409,384.

My object, generally stated, is to provide improvements in X-ray apparatus to the end that the same will be caused to be better adapted for performing the service for which structures of this character are provided.

One of my more particular objects is to provide a table adapted to be used for both fluoroscopic and radiographic work and which shall employ, instead of the two X-ray tubes heretofore commonly used on tables for performing this dual work, and without the loss of range, flexibility or ease of movement, a single X-ray tube with consequent reduction in the amount of material required, the cost of manufacture and shipping and the avoidance of the necessity of changing the X-ray tube from one holder to another, as is necessary where a single X-ray tube is used on the tables as hitherto provided, and other objects as will be apparent from the following description.

Referring to the accompanying drawings—

Figure 1 is a view in side elevation of a table constructed in accordance with my invention, the X-ray-tube-holding mechanism being shown in position for fluoroscopic work. Figure 2 is a plan view of the structure shown in Fig. 1, the table top being shown in horizontal position. Figure 3 is a plan view of the structure of the preceding figures with certain parts omitted and others broken away. Figure 4 is a view in end elevation of the said structure with certain parts sectioned and others broken away. Figure 5 is an end view of certain of the members in part forming the frame of the table, this view being taken along the line 5—5 on Fig. 1 and viewed in the direction of the arrows. Figure 6 is a broken, elevational view, partly sectional, of one of the lower members of the frame of the table, and the lower portion of the tube-stand with which the X-ray tube-holder is operatively connected. Figure 7 is a view in elevation, and partly sectional, of the combined handle-and-shutter-operating device, through the medium of which the X-ray tube-holder is shifted on its support, the parts in section being taken at the line 7—7 on Fig. 4 and viewed in the direction of the arrows. Figure 8 is a plan view of one side of the shutter mechanism used in connection with the tube-holding structure. Figure 9 is a side view of the structure shown in Fig. 8 together with the X-ray-tube-holding frame, and a portion of the guide-equipped part of the frame of the table. Figure 10 is a plan view of the structure shown in Fig. 8 with certain parts broken away. Figure 11 is a plan view of the tube-holding frame shown in Fig. 9, with the shutter mechanism removed. Figure 12 is a cross-sectional view of the mechanism shown in Fig. 9 together with a tube holder and a tube therein. Figure 13 is a view like Fig. 4, with certain parts removed, showing the X-ray-tube-holding structure in a position for supporting an X-ray tube for radiographic work and equipped with a compression cylinder. Figure 14 is a plan view of the X-ray-tube-supporting structure shown in Fig. 13, the column forming a part of this structure being shown in section. Figure 15 is a broken section taken at the line 15 on Fig. 14 and viewed in the direction of the arrow. Figure 16 is a view in side elevation of a detail of the mechanism for swinging the table-top through a vertical plane. Figure 17 is a section taken at the line 17—17 on Fig. 16 and viewed in the direction of the arrows. Figure 18 is a section taken at the line 18—18 on Fig. 17 and viewed in the direction of the arrows. Figure 19 is a perspective view of the pawl device forming a part of the mechanism of Figs. 16, 17 and 18. Figure 20 is a plan view of the table-top, showing certain parts in section and others broken away and illustrating the plate-shifting mechanism in plan. Figure 21 is a section taken at the line 21 on Fig. 20 and viewed in the direction of the arrow. Figure 22 is a broken view in longitudinal section, of the cushioning means employed for the plate-shifting mechanism. Figure 23 is a view in section of the valved vent portion of the cushioning cylinder shown in Fig. 22, the section being taken at the line 23 on Fig. 25 and viewed in the direction of the arrow. Figure 24 is a sectional view of a trigger device employed, the same being taken at the line 24 on Fig. 20 and viewed in the direction of the arrow. Figure 25 is a view in side elevation of a portion of the table top with the plate-shifting means thereon, and showing the cushioning mechanism for the latter. Figure 26 is a plan view of the carriage supporting the plate-holder. Figure 27 is an edge view of the carriage of

Fig. 26. Figure 28 is a plan view of the plate-holder. Figure 29 is a view in longitudinal sectional elevation of the plate-holder; and Figure 30, a view in longitudinal sectional elevation of the X-ray tube and bowl.

The main frame of the table is formed of uprights 30 and 31 at one end of the structure, the uprights 32 and 33 at the opposite end thereof, the intermediate uprights 34 and 35, the cross-frame member 36 connected with the lower ends of the uprights 30 and 31 and projecting laterally beyond the frame and terminating in an upwardly-extending projection 37, a cross-bar 38 at the opposite end connecting the uprights 32 and 33, rods 39 and 40 located at opposite sides of the frame and connecting the uprights 30 and 33 and 31 and 32, respectively, rods 41 and 42 extending lengthwise of the frame and connecting the uprights 31, 34 and 32 together and the uprights 30 and 35, respectively, and a rod 43 extending lengthwise of the table, this rod being connected between its end with the upright 37 and at the right-hand end thereof in Fig. 2 with a laterally-extending member 45 carried by the upright 33, the rod 43 being arranged parallel with the median line of the frame, the uprights referred to being preferably equipped with rollers to facilitate the movement of the table over the floor. The frame thus provided is equipped with the usual insulating columns 46 carrying reels 47 on which the wires for conducting current to the X-ray tube from the insulating structure 46 are run, this being in accordance with common practice.

The table-top which, in accordance with the preferred illustrated embodiment of the invention, is equipped with plate-shifting mechanism provided for the purpose of making stereoscopic radiographs, is located between the sides of the frame hereinbefore described and comprises longitudinally-extending rods 48 and 49 spaced apart and provided with brackets, or braces, 50 at their opposite ends, connected together by cross bars 51 and 52 at opposite ends of the table, with U-shaped bars 53 having their channels extending toward each other, connected at their ends with the brackets 50, with spaces provided between the bars 53 and the adjacent rods 48 and 49 which they parallel, the portion of the table-top framed by the members 51, 52 and 53 being formed of a plate 51 of material transparent to X-rays, and two plate sections of material opaque to X-rays, flatwise opposing the plate 54 and movable lengthwise of the table to present between their adjacent ends, at any desired point along the table, a space, or window, through which the X-rays for penetrating the patient positioned on the table-top, may pass, this being in accordance with common practice. The table-top thus provided carries toward one end thereof (the left-hand end in Fig. 2) brackets 55 and 56 which embrace, and are firmly secured to, the rods 48 and 49, these brackets being equipped with trunnions 57 and 58, respectively, which are mounted in the upper ends of the uprights 30 and 31, respectively, thereby adapting the table-top to be swung in a vertical plane on a horizontal axis to horizontal or vertical position or any intermediate angular position desired, the table-top as shown being provided at its lefthand end in Fig. 1 with a head-rest 59 pivotally connected with the frame of the table-top as indicated at the one end at 60, and carrying set-screws 61 extending through arc slots 62 in segments 63 carried by the frame of the table-top, the construction thus provided permitting the head-rest to be tilted on the table-top to any desired position. In practice the shorter end of the table-top, namely, the left-hand end in Figure 1, would be counter-weighted to render the table-top substantially balanced when a patient is positioned thereon.

Located at one side of the table-top and carried by the frame of the table is mechanism for supporting an X-ray tube and, in accordance with the preferred illustrated embodiment of my invention, a fluorescent screen for use when the apparatus is employed for fluoroscopic work, a description of the illustrated mechanism referred to being as follows: Located between the rods 43 and 43ª and 39 and 41 is a hollow column 64 connected at its lower end with a clamping sleeve 65 which rests at a horizontal surface 66 thereon against the top portion 67 of a member 68 having a laterally cut-away portion 69 and equipped in the recess thus formed with rollers 70 journaled thereon and grouped about the rod with which they contact and afford means whereby the structure supported from these rollers may be readily moved along the rod 43ª, the members 65 and 68 being connected together through the medium of screws 71 which pass through elongated slots 72 in the member 65 and screw into the member 68, this feature permitting the column 64 to be adjusted on the member 68 crosswise of the table so as to bring the column in a position perpendicular to the table-top. The column 64 is also provided with a bracket 73 rigidly secured thereto and having a laterally-extending portion 74, preferably curved on its under side, which extends over and partially embraces the rod 43, the portion 74 being equipped with rollers 75 which engage opposite sides of the rod 43 and serve in connection with the rollers 70 to provide a very stable rolling connection between the column 64 and the frame of the machine, it

being understood that this column is thereby adapted to be shifted along the table-top as desired. Surrounding the column 64 and slidable up and down thereon is a sleeve 76 which has a cut-away portion 77 to permit the sleeve to be lowered a relatively great distance, as shown in Figure 4, without interference therewith by the bracket 73, the sleeve 76 being equipped at its upper and lower ends with rollers 78 adapted to bear against the column 64 and thereby reduce, to the minimum, friction between the sleeve and column in the movement of the sleeve on the latter. The sleeve 76 is connected with one end of a cable 79 which extends upwardly over a pulley 80 journaled at 81 on a head 81[a] rotatable on a vertical axis, on the upper end of the column 64, the other end of this cable extending downwardly through the head 81[a] into the interior of the column where it is connected preferably, by the antifriction joint 82 with a counterweight 83 which slides freely up and down in the column 64. The cable 79 extends through a centrally-disposed aperture 84 in an auxiliary counter-weight 85, also adapted to silde up and down in the column 64 and cooperating with a catch 86 for holding it in the raised inoperating position shown in Fig. 4, except under the conditions as hereinafter explained, the counterweight 84 being preferably formed with an annular depending flange 87 spaced from the body of the weight 85 and forming an annular channel 88 and the catch referred to being preferably formed of a pin 89 mounted in an apertured boss 90 on the column 64 and extending at its inner end, which is provided with a finger 91, through an opening in the wall of the column, the pin 89 having a finger grip 92 by means of which this pin may be moved, in opposition to the action of a coiled spring 93 surrounding the pin and tending to move it to the right in Fig. 4, to prevent the withdrawal of the finger 91 from the interlocked position relative to the flange 87 shown in Fig. 4, to permit the weight 85 to lower, under the conditions hereinafter explained.

The sleeve 76 is provided with a lateral extension 94 projecting toward the table-top and terminating in the disk-portion 95 provided centrally with a pivot stud 95[a] which extends through a similar disk-member 96 which fits flatwise against the disk 95, the pivot-stud referred to being provided with means shown at 97, and which may be of any suitable construction for producing the desired frictional engagement between these disks, to permit the disk 96 and the parts carried thereby, as hereinafter described, to be adjusted to any desired position on the disk 95 and about the pivot-stud and be releasably held in such adjusted position. The disk 96 carries the parallel members 98 connected together by a web 99 and containing sockets 100 which are disposed at preferably a right angle, to the plane of the disk 96, these sockets receiving and supporting the ends of the rods 101 shown of circular form in cross-section which project in spaced parallel relation laterally from the disk structure 96 and are connected at their outer ends with a cross-member 102, as by securing them in sockets 103 in this cross-member, the structure thus provided being of rectangular form and the rod portions 101 forming guides. Supported on the guides 101 to be movable along the latter, is a tube-holding structure formed of a frame comprising side members 104 having sleeve-portions 105 encircling the rods 101, the members 104 containing openings for pivot pins, hereinafter referred to, located midway between the sleeves 105, and also containing arc-shaped slots 107, the members 104 being connected together at their ends by rods 108. Located within the space provided between the member 104, is a plate 109 carrying pivot pins 106 which extend through the pivot openings hereinbefore referred to, in the members 104, adapting the plate 109 to be swung about an axis extending transversely of the frame of which the rods 101 are parts, the plate 109 having angularly-disposed extensions 110 into which set-screw devices 111, passing through the slots 107, screw, for the purpose of permitting the plate 109 to be locked in any desired position of adjustment about the axis on which it swings, the inner surfaces of the extensions 110 containing grooves 112 paralleling the face of the plate 109 and extending lengthwise of the frame of which the rods 101 are parts. Flatwise opposing the plate 109 which is centrally apertured, is another plate 113 also centrally apertured and connected with the plate 109 to be rotatable thereon, friction plungers represented at 114 serving to hold the plate 113 in adjusted position, as will be understood in the art. The plate 113 carries means, represented at 113[a], in accordance with common practice, for releasably securing thereto, a compression cylinder 113[b] used in radiographic work, and at its opposite side is equipped with a bowl of insulating material opaque to X-rays, formed of two sections 115 and 115[a] clamped together by means of nuts and bolts as indicated at 255, the joint between these sections being made light tight in any suitable manner, as for example in the way illustrated at 256. Each section of the bowl contains an aperture 257, preferably semi-circular in shape, these apertures registering with each other and together forming a circular opening for the passage therethrough of the useful X-rays. To prevent the passage of illuminating rays through the opening 257, a plate 258 constructed of any suitable material opaque to

illuminating rays, but transparent to X-rays, is confined in the opening 257 in any suitable way, as for example as illustrated at 259. The X-ray tube, represented at 260, is held within the bowl referred to, in spaced relation from the walls of the latter, by means of resilient spacing cushions 260[a] in a manner well known in the art. In practice the tube 260 is inserted in the bowl by first separating the sections 115 and 115[a], slipping each half of the bowl over one of the stems 260[b] of the tube, the radiating washers 261 being removable, thereupon placing the disk 258 in position in the opening 257, and then clamping the two sections of the bowl together by means of the nuts and bolts 255, the several parts assuming the positions represented in Fig. 30. Means for preventing illuminating rays from passing out at the ends of the stems of the bowl may be provided, as for example those indicated at 262 and formed of washers of material opaque to illuminating rays. The bowl and X-ray tube are held in position on plate 113[a] by means of the spaced standards 116 and caps 117 held together by means of screws 117[a].

It may be here stated that by reason of the construction of the tube-holding means in general, the tube may be rotated with the plate 113, on the plate 109, the plate 109 may be rocked to any desired position of adjustment at the pivots 106, the frame of which the members 104 form parts may be moved along the rods 101, the frame formed in part of the rods 101 may be rotated on the member 76 at its pivotal connection 95 therewith, the sleeve 76 carrying all of the parts just referred to may be raised and lowered on the column 64 at will and turned about the column and the latter may be shifted, while maintaining its upright position, along the rods 43 and 43[a] by which it is supported, these combinations of movements thereby affording to the structure great flexibility and adapting the X-ray tube to be adjusted into the various positions required for fluoroscopic and radiographic work, it being possible by the structure thus provided to position the frame of which the rods 101 are parts, beneath the table-top as for use in fluoroscopic work as shown in Fig. 4, and above the table-top as for use in radiographic work, as illustrated in Fig. 13.

The arrangement as shown involves the use of shutter mechanism for use in fluoroscopic work, this mechanism being provided for ready assembly and disassembly with the other parts of the apparatus depending on whether the machine is to be used on fluoroscopic or radiographic work, the following being a description of the shutter mechanism as provided. The mechanism comprises a supporting plate-like member 121 equipped with upwardly-extending bosses 122 spaced apart and firmly securing, by cap sections 123 thereon, a rod 124 which extends lengthwise of the member 121 and is adapted at its free end to enter a sleeve-guide 125 depending from the cross member 102 midway between the ends of the latter, this feature of the construction relieving the parts carried by the rods 101 and the shutter, from strain imposed by the weight of the parts or force applied in operating the shutter. The inner end of the member 121, which is expanded as shown, is equipped with four shutter plates 126, 127, 128 and 129, the shutter plates 126 and 127 being located at one side of the member 121 to co-operate with the opening 130 in the latter, and the shutter plates 128 and 129 being located at the opposite side of the member 121. The shutter plates 126 and 127 are mounted between grooved studs 131 and grooved studs 132 on the member 121, to move crosswise of the member 121; and to effect this movement simultaneously, these shutter plates are pivotally connected at 133 and 134 with the ends of toggles 135 and 136 pivoted at 137 and 138 on the member 121 and pivotally connected at 139 with a rod 140 pivotally connected at 141 with a crank-arm 142 on a vertically-disposed rod 143 located, and rotatable, in a sleeve 144 likewise rotatable in a tubular member 145 rising from, and supported on, an end of member 121, the member 143 having a hand-grip 146 at its upper end by means of which it may be rotated to move the shutters 126 and 127 toward and away from each other across the opening 130. The shutter plates 128 and 129 are guidingly supported at the under side of member 121 to move across the opening 130 but in a direction at right angles to the movement of the shutter plates 126 and 127, by means of grooved studs 147 and 148, these shutter plates carrying pins 149 and 150, respectively, which extend into elongated slots 151 and 152, respectively, in a lever 153 pivoted at 154 on the member 121, this lever being pivotally connected at 155 with one end of a link 156, the other end of which is pivotally connected at 157 with a crank-arm 158 provided on the rotatable sleeve 144, this sleeve having a handle-grip 158[a] through the medium of which the sleeve 144 may be rotated to move the shutter plates 128 and 129 toward and away from each other across the opening 130. The opposite side edges, represented at 159 and 160, of the member 121 are adapted to enter the grooves 112 on the plate member 109 and thus telescope with the latter upon applying the shutter device to the position shown in Fig. 4, the ends of the grooves 112 preferably flaring, as indicated at 161, to facilitate the introduction of the member 121 into these guide-grooves. As a means for securely holding the shutter mechanism referred to in place relative to the X-ray tube-holder, I provide a catch-

device formed of a lever 162 pivoted on the member 121 at 163 and having a shouldered end portion 164 adapted to snap over a shoulder portion 165 on one of the extensions 110 under the action of a spring 166 interposed between the other end of the lever 162 and the member 121.

In connection with the use of the table for fluoroscopic work, I provide means for supporting a fluorescent screen above the table-top, these means in the particular arrangement shown, comprising a pair of upright rods 167, mounted in sockets 168 provided in the members 98, to be adjustable lengthwise therein, the sockets 168 being provided with set screws 169 for clamping these rods in place, the upper ends of these rods being connected together by a cross-bar 170. Mounted on the rods 167 to be slidable up and down thereon, is a screen-supporting bar 171 formed with sleeve portions 172 surrounding the rods 167 and connected together by a bar section 173 and from which laterally projects a friction-disk 173^a, the sleeve sections 172 being provided with rollers 175 journaled thereon and engaging the rods 167 to permit of ready vertical adjustment of the screen-holding frame on the rods 167. The rectangular frame member 174 is provided at one end with a friction disk 174^a from the face of which a stud 174^b projects whereby the friction surfaces of the two disks 173^a and 174^a are held in engagement one with the other to allow the screen-frame member 174 to be rotated about the stud 174^b as an axis and held frictionally in adjusted position for a purpose hereinafter described. The frame member 174 projects so that its axis is in a plane substantially parallel with the frame of which the rods 101 are parts, this screen-holding frame by reason of its mounting, as stated, maintaining the above parallelism with the other frame just referred to, at all times and being so arranged as to extend in one position of adjustment of the member 96, flatwise of the table-top and directly above it as indicated in Figs. 2 and 4. The frame 174 is adapted to receive a removable and replaceable frame 176 in which the fluorescent screen proper 177 is mounted, this frame having handles 179 by which it may be introduced into, and removed from the frame 174. The frame 176 is provided at its opposite edges with grooved rollers 180, into which grooves the inner opposing edges of the side members of the frame 174 extend for holding the frame 176 in place, these side edges containing recesses 181 into which the rollers 180 are introduced to engage these rollers with the sides of the frame 174 upon shifting the frame 176 to the position shown in Fig. 2. The frame 174 beyond the frame 176 is provided with a plate 182 pivoted to the frame 174 at 183 and carrying a spring bumper 184 to cushion the frame 176 in sliding within its supporting frame, the bumper 184 being movable out of operating position when it is desired to remove the frame 176, by swinging the plate 182 on its pivot 183.

As hereinbefore stated, the table-top is adapted to be swung from horizontal to vertical position and to any desired angle intermediate these extreme positions, and to this end I provide mechanism whereby the table-top may be adjusted readily and maintained in its position of adjustment, a description of these means as shown being as follows: Rigidly secured to one of the trunnions 58 is a segmental gear 185 which meshes with a pinion 186 rigidly secured, as by a screw 187, to a shaft 188 journaled in a bracket 189 on the main frame of the machine. The shaft 188 may be operated in any suitable manner, as for example by means of a crank 188^a rigidly secured to the shaft 188 by a screw 190. The bracket 189 is formed with a disk portion 191 which is provided on the face thereof opposite the crank 188^a with a raceway 192 in which a series of balls 193 are located, these balls bearing against a friction plate 194 having journal mounting on the shaft 188 and pressed toward the disk 191, by means of plungers 195 located in sockets 196 in the crank 188^a and backed up by springs 197, the crank 188^a at the portion thereof adjacent the disk 194 being in the form of a circular ratchet 198. The disk 191 is provided with a pin 199 projecting from a face thereof into an enlarged, arc-shaped, slot 200 in the plate 194, whereby the plate 194 is permitted to have limited rotary movement on the shaft 188. Co-operating with the ratchet 198 is a pawl 201 pivoted at 202 on the plate 191, the lower toothed end 203 of this pawl being adapted to engage the teeth of the ratchet 198 for holding the shaft 188 against clockwise rotation in Fig 16, a spring represented at 204 and located between a lug 205 on the plate 191 and the arm 206 of the pawl serving to yieldingly force the tooth 203 into engagement with the teeth of the ratchet 198. The pawl 201 adjacent the tooth 203 is provided with an inwardly-extending lip 207 which extends into a notch 208 in the periphery of the disk 194, the parts above described being so proportioned and arranged that when the plate 194 is rotated in anti-clockwise direction in Figs. 16 and 18, the corner 209 of the notch 208 will engage the lip 207 and rock the pawl 201 in clockwise direction in Figs. 16 and 18 sufficiently far to move the tooth 203 out of the path of rotation of the teeth on the ratchet 198.

The operation of the table-tilting mechanism described is as follows: Assuming the parts thereof to be in the position shown in

Figs. 16, 17 and 18, which represent the normal positions of these parts, the operator to tilt the table toward a position in which it extends vertically, rotates the shaft 188 by the crank 188[a] in counter-clockwise direction, to that shown in Figs. 16 and 18. Thus rotating this shaft rotates the ratchet 198, and through the medium of the plungers 195 the disk 194, the latter rotating in counter-clockwise direction in Figs. 16 and 18 until restrained by engagement at the wall of the slot 200 with the pin 199. In this position, as above stated, the tooth 203 is out of engagement with the ratchet 198 and thus the operator may continue to rotate the shaft 188 in counter-clockwise direction for continuing the movement of the table-top to vertical position without effecting the rocking of the pawl 201 each time a tooth of the ratchet passes the tooth 203 of the pawl, thereby avoiding objectionable clicking incident to the running of a ratchet across a pawl. A slight rotation of the shaft 188 in clockwise direction in Figs 16 and 18 as when the operator, upon the table reaching the desired position, discontinues pressure on the crank for rotating it in anti-clockwise direction, operates to rotate the disk 194 in clockwise direction in Figs. 16 and 18, thereby withdrawing the corner 209 from engagement with the lip 207 and permitting the spring 204 to rock the pawl 201 into a position in which the tooth 203 may engage the adjacent one of the teeth 198, thereby preventing further clockwise movement of the shaft 188 and holding the table-top in the desired adjusted position. If it is desired to return the table-top toward horizontal position, the operator rocks the pawl 201 by pressing on the portion 206 to disengage the tooth 203 from the teeth of the ratchet 198, and by grasping the crank 188[a] permits the table-top to slowly lower, and when the desired position of adjustment of the latter is effected. releases the bar and permits its spring 204 to rock it to a position in which its tooth 203 interlocks with the ratchet 198.

The apparatus as shown involves, as hereinbefore stated, means whereby stereoscopic radiographs may be produced, a description of these illustrated means being as follows, and as to the general features thereof being the same as those disclosed in United States Patent No. 1,242,498 granted to J. B. Wantz, October 9, 1917. The means referred to are formed of a carriage 210 shown as formed of a rectangular frame provided at its opposite edges with grooved rollers 211 at which this carriage rollingly engages guide rods 212 supported at the inner sides of the channel bars 53, the rods 212 and the bars 53 extending in parallel relation and these rods supporting the carriage beneath section 54 of the table-top. The carriage 210 is so constructed, as shown, as to provide at its opposite edges grooves 213 adapted to receive the opposite edges of a plate-holding device hereinafter described, the latter being adapted to be thus assembled with the carriage by telescoping it therewith, the carriage being provided at one end with an angle bar 214 forming a part of the frame of the carriage and operating as a stop for the plate-holding device, and at its opposite end with a cross bar 215 also forming a part of the frame of the carriage. Co-operating with the carriage 210 are means for effecting the shifting of the carriage to shift the sensitized plates from the position in which one thereof is exposed for the taking of one picture, to a position in which the other sensitized plate is exposed for the taking of the companion stereoscopic picture, these means comprising a cylinder 216 secured, to extend lengthwise of the table-top and in a plane below the bars 53, to depending brackets 217 on one of the bars 53, the cylinder 216 being equipped with a valved vent device 218 and an inwardly-opening check-valve-controlled inlet 216[a]. The cylinder 216 contains a piston 219, the rod 220 of which is connected with a depending bracket 221 on the carriage 210, the rod 220 having a downwardly-extending stud 222 which is connected with one end of a coiled spring 223, the other end of this spring being connected with a depending bracket 224 rigidly connected with the cylinder 216, the spring 223 tending to shift the carriage 210 toward the end member 52 in Fig. 20. The carriage 210 at its end adjacent member 51 (Fig. 20) is provided with a handle portion 225 projecting laterally therefrom and into such position at the side of the apparatus as to permit an operator to readily grasp it and through the medium thereof shift the carriage toward the member 51 in Fig. 20.

The handle device 225 presents a shoulder portion 226 adapted to become interlocked with a trigger device 227 formed of a casing 228 secured to a stationary part of the table structure and containing a spring-pressed plunger 229 having a cable 230 connected therewith for retracting the plunger, which latter under the operation of its impelling spring normally projects into the path of the shoulder 226, and when the carriage 210 is shifted toward the member 51 in Fig. 20 to its extreme position interlocking with the shoulder 226 to releasably hold the carriage in such position against the action of the spring 223.

The construction of the plate-holder shown involves the provision of two rectangular-shaped open frames 231 hinged together at their adjacent edges as indicated at 232, the duplex frame thus provided being adapted to telescope with the carriage 210 as hereinbefore explained, and in thus

positioning it in the carriage, a lug on this carriage and represented at 233 is adapted to drop behind one of the frames 231, this lug and the end bar 214 of the carriage 210 preventing the plate-holder from becoming displaced. Each one of these frames 231 has hingedly connected therewith, as indicated at 234, a plate 235 which may be of aluminum, or any other suitable material, and which, when extending in the plane of the frames 231, is held in place by spring-catches, represented at 236. The plates 235 are provided as the direct supports for the sensitized plates on which the radiographs are to be made and by preference each of these plates is provided with clamping devices 237 and 238. The plate-fastening devices 237 and 238, which are adapted to be adjusted toward and away from each other on the plates carrying them, are formed of bars 239 and 240, respectively, each of which carries a set of clips 241 extending therefrom in one direction for use in securing cassettes to the plates 235, and a set of spring-clips 242 for securing the sensitized plates, enclosed in protecting envelopes, direct to the plates 235, the bars 239 and 240 being provided with pins 243 extending through slots 244 in the plates 235 and equipped at the under sides of these plates with spring washers 245 for holding the devices 237 and 238 in relatively adjusted position. Each of the plates 235 is provided on its upper surface with markings shown as sets of dots in circles with the designations 8—10, 10—12, etc. The sets of guide markings shown above the slotted portions 244 of the plates 235 serve as guides in the accurate positioning of the sensitized plates secured in cassettes, and the lower sets of dots serve as guides in the positioning of the plates enclosed in envelopes. By way of illustration, assuming that cassette 246 containing a sensitized plate of 8″ x 10″ size is to be secured to the plate in the right-hand frame 231 to extend at its long dimension crosswise of the plate-holder, the operator would position the cassette represented at 246 as shown at the right hand end of Fig. 28, the upper corner of which at the left-hand side of the cassette in Fig. 28 registering with the dot opposite the numeral 10, and the securing devices 237 and 238 then adjusted on the plate 235 to firmly hold the cassette in place. If it is desired that the long dimension of each plate extend lengthwise of the holder, the cassettes would be turned through an angle of 90° to cause their long dimensions to extend lengthwise of the holder and one corner of each cassette positioned to register with the point 8 in Fig. 28.

To insure the positioning of the sensitized plate in the left-hand frame 231 at right angles to the axis of the plate-holder, the bar 239 is provided at the collar portions 247 and 248 with depending pins (not shown) adapted to extend into the openings 248ª in the plates 235 which are so arranged in the various adjusted positions of securing device 237 that the latter will always extend at a right angle to the axis of the plate-holder.

The arrangement of the carriage 210 and the parts with which it co-operates is such that the position occupied by the sensitized plate carried on the left-hand section of the plate-holder in Fig. 28, relative to a fixed part of the apparatus, when the carriage 210 is shifted from its extreme position adjacent member 51 in Fig. 20, wherein the trigger 229 is in engagement with the shoulder 226 toward the member 52 in Figure 20 to the position therein shown, is the same as that occupied by the cassette carried at the right-hand end of the plate-holder in Fig. 28 when the trigger 229 is in engagement with the shoulder 226, the two companion plates for forming the stereoscopic picture thus occupying the same position during exposure, it being understood that in accordance with common practice the X-ray tube-holding device above referred to would, in the making of the first exposure, direct its rays through the body to be photographed, at the desired angle at one side of a plane extending at right angles to the plane occupied by the sensitized plates; and for making the second exposure on the second plate, be directed at the same angle through the body but at the opposite side of a plane extending at right angles to the plane occupied by the sensitized plates.

The lead glass bowl consisting of the two sections 115 and 115ª hereinbefore referred to may be entirely coated with any suitable insulating compound opaque to light, preferably with the exception of a small bull's eye provided for the purpose of permitting the operator to observe the operation of the tube and which may also serve as a guide to the operator in the centering of the tube in the tube-holder. The purpose of thus coating the bowl is to intercept illuminating rays produced in the X-ray tube and thereby prevent any effect on the dilation of the pupils of the observer's eyes. If desired, instead of coating the bowl as stated it may be provided, in any suitable way, of such color, such as red, blue or black, that illuminating rays in passing therethrough will not affect the dilation of the pupils of the observer's eyes.

In the use of the apparatus for fluoroscopic work, in which use the tube-holding device would be positioned below the table-top and the plate-holder of Fig. 28 removed from the carriage 210, the entire tube-stand which is mounted on the rods 43 and 43ª as hereinbefore explained, is run along these

rods to a point beyond the head of the table (the right-hand end of the table in Fig. 1) and the tube-holding device adjusted to assume the depending position shown in Fig. 4 which is effected by rotating the frame of which the rods 101 are a part at its pivotal connection with the member 95, the said frame in this position extending beneath the table-top. The tube-stand is then moved in the opposite direction along its supporting guide-ways to embrace between a pair of rollers 249 on this frame, a bar 250 secured to one of the bars 53 of the table-top to extend lengthwise thereof, and enter between a pair of tracks 251 secured to the other frame member 53 to extend lengthwise thereof, a roller 252, whereby the frame of which the rods 101 are a part is maintained at all times, in the adjustment of the apparatus as above stated, in parallel relation to the table-top.

In the use of the table for fluoroscopic work, the shutter devices hereinbefore described would be associated with the tube-holding device as stated, the handle portion shown in Fig. 7 of the shutter device serving not only as a means for adjusting the shutters to vary the size of the opening, but also as a means for shifting the tube-holding device, when engaged with the track-way as hereinbefore stated, into different positions of adjustment, it being understood from the foregoing description that the support for the shutter mechanism as shown in Fig. 4 is such that when the tube-holding device occupies the position shown in Fig. 4 the shutter mechanism may be readily shifted on its support into operative relation to the X-ray tube supported in the holder.

When the table-top is in horizontal position, all lateral movements of the tube-supporting parts mounted on the rods 101 are effected by sliding these parts on the rods; and all movements of these tube-holding parts lengthwise of the table-top are effected by moving the entire tube-stand structure lengthwise of the table on the guide bars 43 and 43ª; and any combination of lateral and longitudinal movements of these tube-holding parts result in a similar combination of movements of these parts along the rods 101 and of the tube-stand along the bars 43 and 43ª. When the table-top is in vertical position, lateral movement of the tube-holding parts referred to are effected by the moving of these parts along the bars 101 as explained in connection with the movement of these parts when the table-top is in horizontal position, but all vertical movement of these tube-holding parts result in the vertical movement of the sleeve 76 on the upright 64. Any combination of the lateral and vertical movements of these tube-holding parts will necessarily result in a similar combination of movements of these parts along the bars 101, and the sleeve 76, vertically on the support 64. When the table-top occupies a position between horizontal and vertical, lateral movement of the tube-holding parts referred to along the rods 101 is the same as that above explained; but longitudinal movement of these parts along the table-top involves a combination of a sliding movement of the tube-stand along the supporting rods 43 and 43ª, vertical movement of the sleeve 76 on the supporting column 64, and pivotal movement of the frame of which the rods 101 are a part, on the sleeve 76.

It will be noted that the tube-holding parts supported on the rods 101 are, by reason of the guiding function performed by the tracks, caused to be held at all times, regardless of the adjustment of the table-top in a vertical plane, in a fixed relation to said table-top but free to have universal movement in parallel relation to the table-top. Thus as the table-top is swung from one position to another the desired operative relation of the X-ray tube to the table-top is maintained and adjustments of the tube along the table-top may be readily made, it being understood, as hereinbefore explained, that the parts directly supporting the X-ray tube may be rocked on the members 104 at the pivots 112 to vary the angle at which, and the direction from which, the rays are directed against the patient.

In the use of the apparatus for radiographic work, the tube-stand would be shifted to the extreme end at the head of the table to move the rollers 249 and 252 beyond the tracks 250 and 251, permitting the operator to swing the tube-supporting mechanism at its pivotal connection with the sleeve 76 to inverted position, namely that shown in Fig. 13, the provision of the tube-supporting device as shown and described permitting the tube to have universal movement for adjusting it to any position as desired, for the production of either a single radiograph or the production of stereoscopic radiographs, in which latter case the plate-shifting carriage 210, carrying the plate-holder with sensitized plates therein and shiftable in its operation as hereinbefore explained, would be employed to produce the stereoscopic radiographs, as will be understood by those skilled in the art.

It will be noted from the foregoing that when the apparatus is conditioned for fluoroscopic work, the weight carried by the end of the cable 79 opposite that connected with the counterweight 83, is augmented as compared with the weight imposed thereon when the apparatus is used for radiographic work, as for fluoroscopic work the sleeve 76 also carries the screen device here-

inbefore described and of which the screen 177 is a part, with its supporting rods 167 and the shutter mechanism described. Therefore it is necessary, in order that this part of the apparatus be properly counterbalanced under both conditions, to provide for the varying of the counterweight, and this is effected by the arrangement shown and hereinbefore described, the counterweight 83 serving to counter-balance the sleeve 76 and the parts carried thereby, with the screen device, supporting rods 167 and shutter mechanism removed, and the counterweight 83 augmented by the auxiliary counterweight 85 serving to counterbalance these parts including the screen device, guide rods 167 and shutter mechanism. It will be noted that the auxiliary counterweight 85, by reason of the engagement of the trigger mechanism 86, cannot be released by the operator until the counterweight 83 has risen into engagement with this auxiliary counterweight and lifted it to a position in which the flange 87 is withdrawn from the path of movement of the finger 91. Thus the operator cannot release the auxiliary counterweight 85 until it is supported by the counterweight 83, thereby avoiding the possibility of damage to the apparatus which might occur should the auxiliary counterweight drop upon the main counterweight 83.

The lifting of the auxiliary counterweight 85 as stated occurs in the adjustment of the tube-holding parts as hereinbefore explained, to engage the rollers 249 and 252 with the tracks 250 and 251, the release of this auxiliary counterweight supported by the main counterweight 83 being effected by the operator shifting the pin 89 in an outward direction.

The feature of the adjustment of the column 64 on the bracket member 68 as described is of advantage, as it serves as a means whereby, through the adjustment thus afforded, the column 64 may be caused to assume a true vertical position, the column 64 being shiftable at its lower end, at the screws 71, crosswise of the table and swiveling on the rod and set in such position by the screws 71 and a set-screw 74ª on part 74.

It will be understood that in the use of the table for radiographic work, the sensitized plates or cassettes (Fig. 28) would extend in superposed position on the plates 235, and therefore interposed between these plates and the table-top. These sensitized plates, however, are rendered very accessible for removal from the table, and replacement by other plates, regardless of the position occupied by the table-top and without requiring the shifting of the plate-holder lengthwise of the carriage, by reason of the adaptability of the plates 235 to movement to a position on the frames 231, to which the sensitized plates or cassettes carried thereby are accessible to the operator at the under side or back of the table-top. The hinging of these plates at 234 is desirable, as thereby the plates are held to the plate-holder frame. It will be understood, however, that if desired the plates 235 may be disconnected from the plate-holder frame and releasably secured thereto in any desirable manner.

While I have illustrated and described a particular construction embodying my invention, I do not wish to be understood as intending to limit it thereto, as the same may be variously modified and altered without departing from the spirit of my invention.

What I claim as new and desire to secure by Letters Patent is:

1. In an X-ray table, the combination of a frame, a table-top mounted thereon, a tube-stand mounted on said frame independently of said table-top, a tube-holder on said tube-stand movable above and below said table-top, and means on said table cooperating with said tube-holder for guiding said tube-holder in its movements beneath said table-top.

2. In an X-ray table, the combination of a frame, a table-top mounted thereon, a tube-stand mounted on said frame independently of said table-top, a tube-holder on said tube-stand movable above and below said table-top, and means on said table-top below the upper surface thereof cooperating with said tube-holder for guiding said tube-holder in its movements beneath said table-top.

3. In an X-ray table, the combination of a frame, a table-top mounted thereon, a tube-stand mounted on said frame independently of said table-top, a tube-holder movable above and below said table-top and adjustable up and down on said tube-stand, and guiding means on said table-top cooperating with said tube-holder adapted to guide said tube-holder in its movements beneath said table-top.

4. In an X-ray table, the combination of a frame, a table-top pivotally mounted thereon, a tube-stand mounted on said frame independently of said table-top, a tube-holder movable above and below said table-top and adjustable up and down on said tube stand, and guiding means on said table-top cooperating with said tube-holder and adapting said holder to move in a single plane shiftable with, below, and substantially parallel to said table-top.

5. In an X-ray table, the combination of a frame, a table-top pivotally mounted thereon, a tube-stand mounted on said frame, a tube-holder adjustable up and down thereon and movable above and below said

BEST AVAILABLE COPY

table top, and guiding means on said table-top cooperating with said tube holder and adapting said holder to move in a single plane below and substantially parallel to said table-top.

6. In an X-ray table, the combination of a frame, a table-top pivotally mounted thereon, a tube-stand mounted on said frame independently of said table-top, a tube-holder movable above and below said table-top and on said stand, and guiding means on said table-top adapted to be engaged by said tube-holder and operating to hold the latter to movement in a single plane shiftable with, beneath and substantially parallel to the table-top.

7. In an X-ray table, the combination of a frame, a table-top pivotally mounted thereon, a tube-stand mounted on said frame independently of said table top, a tube-holder adjustable above and below said table top and on said stand, and vertically movable and shiftable along said frame, and guiding means on said table-top cooperating with said tube-holder, adapting the latter to move in a single plane below and substantially parallel to said table-top.

8. In an X-ray table, the combination of a frame, a table-top pivotally mounted thereon, a tube-stand mounted on said frame independent of said table top and longitudinally adjustable along said frame, a tube-holder movable above and below said table top and vertically movable on said tube-stand, and guiding means on said table-top cooperating with said tube-holder adapting the latter to move in a single plane below and substantially parallel to said table-top.

9. In an X-ray table, the combination of a frame, a table-top pivotally mounted thereon, a vertically movable tube holder mounted on said frame independent of said table top and movable above and below said table top and along said frame, and guiding means on said table-top cooperating with said tube-holder adapting the latter to move in a single plane below and substantially parallel to said table-top.

10. In an X-ray table, the combination of a frame, a table-top pivotally mounted thereon, a vertically movable tube-holder mounted on said frame independent of said table-top and movable above and below said table top and along said frame, and guiding means on said table-top and disposed parallel thereto for said tube-holder, adapting the latter to move in a single plane below said table-top, and shiftable and parallel therewith.

11. In an X-ray table, the combination of a frame, a table-top pivotally mounted thereon, a tube-stand adjustable along said frame, a pivotally supported tube-holder vertically movable on said tube-stand, and movable above and below said table top and means on said table-top for guiding said tube-holder adapting the latter to move in a single plane below and substantially parallel to said table-top.

12. In an X-ray table, the combination of a frame, a table-top pivotally mounted thereon, a tube-stand adjustable along said frame, a supporting device for a tube-holder vertically adjustable on said tube-stand, a tube-holder having pivotal connection with said device and extending crosswise of the table, and guiding means on said table-top adapting said tube-holder to movement in a plane substantially parallel with said table-top irrespective of the angular position of said table-top.

13. In an X-ray table, the combination of a frame, a table-top pivotally mounted thereon, a tube-stand consisting of a vertical column and a carriage movable on said column, a tube-holder on said carriage, a track on said table-top co-operating with said tube-holder to hold said tube-holder in fixed relation to said table-top and allowing said tube-holder to move in a plane substantially parallel to said table-top, and a connection between said tube-holder and tube-stand whereby said tube-holder is adapted to remain in cooperation with said track on said table-top throughout the movement of said table-top about its pivot.

14. In an X-ray table, the combination of a frame, a table-top pivotally mounted thereon, a tube-stand mounted on said frame independently of said table top, a tube-holder movable above and below said table-top and mounted on said tube-stand, and means for automatically causing said tube-holder to follow the movement of said table-top in the movement of the latter on its pivot and to hold said tube-holder to movement in a single plane substantially parallel to said table top.

15. In an X-ray table, the combination of a frame, a table-top pivotally mounted thereon, a tube-stand mounted on said frame independently of said table top, a tube-holder on said tube-stand, guiding means on said table-top engaged by said tube-holder and operating to hold the latter to movement in a single plane beneath and substantially parallel to said table-top, and counter-balancing means for said tube-holder.

16. In an X-ray table, the combination of a frame, a table-top pivotally mounted thereon, a tube-stand mounted on said frame and movable along the latter, a tube-holder pivotally connected with said tube-stand and movable up and down, guiding means on said table-top engaged by said tube-holder and operating to hold the latter to movement in a single plane beneath and substantially parallel to the table-top, and

counter-balancing means for said tube-holder.

17. In an X-ray table, the combination of a frame, a table-top pivotally mounted thereon, a tube-stand on said frame and movable along the latter, a tub-holder movable up and down and comprising a pivotally-supported member extending crosswise of said table and a member movable lengthwise on said first-named member, guiding means on said table-top operatively engaged by said first-named member and operating to hold the latter to movement in a single plane beneath and substantially parallel to the table-top, and counter-balancing means for said tube-holder.

18. In an X-ray table, the combination of a frame, a table top pivotally supported thereon, a tube support mounted independently of said table top, a tube holder movable above and below said table top on said tube support, guide means on said table top, and means on said tube-holder co-operating with said guide means to hold said tube supporting means to movement in a single plane below and substantially parallel to said table top.

19. In an X-ray table, the combination of a frame, a table-top pivotally supported thereon, guide means on said table top, a supporting member independent of said table top, tube-holding means movable above and below said table top and on said supporting member engaging said guide means, and counter-balancing means supporting said tube-holder on said supporting member.

20. In an X-ray table, the combination of a frame, a table-top thereon, a tube-stand mounted on said frame, a tube-holder movable above and below said table-top and supported from said stand, guide means on said table-top, and means connected with said tube-holder whereby it is adapted to be moved into inverted position beneath said table-top and into engagement with said guide means.

21. In an X-ray table, the combination of a frame, a table top thereon, a tube-stand mounted on said frame, a tube-holder movable above and below said table top and supported from said stand to swing on a horizontal axis, guiding means on said table top, and means connected with said tube-holder to allow said tube-holder to be moved into an inverted position beneath said table top and into engagement with said guiding means.

22. In an X-ray table, the combination of a frame, a table-top thereon, tracks on said table-top, a tube-stand mounted on said frame and movable along the latter, a tube-holder, and a connection between said stand and said tube-holder whereby said tube-holder is adapted to be adjusted to extend above said table-top and into interlocking engagement with said tracks in an inverted position beneath said table-top.

23. In an X-ray table, the combination of a frame, a table-top thereon, tracks on said table-top, a tube-stand mounted on said frame and movable along the latter, a tube-holder adjustable crosswise of said table-top, a connection between said stand and said tube-holder whereby said tube-holder is adapted to extend above said table-top and also into interlocking engagement with said tracks in an inverted position beneath said table-top.

24. In an X-ray table, the combination of a frame, a table top thereon, a tube stand, a tube-holder adjustably mounted on said stand, a counterweight for said tube-holder, a shutter mechanism, a screen-holding device, means for mounting said shutter mechanism and said screen-holding device on said tube-holder, an auxiliary counterweight, means for securing said auxiliary counterweight against movement and means for releasing said securing means to allow said auxiliary counterweight to operate with said main counterweight.

25. In an X-ray table, the combination of a frame, a table-top thereon, a tube-stand, a tube-holder adjustable up and down on said tube-stand, a main counterweight to counter-balance said tube-holder, a shutter mechanism, a screen-holding device, means for securing said shutter-mechanism and said screen-holding device on said tube-holder, an auxiliary counterweight means for securing said auxiliary counterweight against movement, and means for releasing said auxiliary counterweight to operate with said main counterweight.

26. In an X-ray apparatus, a tube-holder, counterbalancing means for said tube-holder, a shutter mechanism, a screen-holding device releasably connected with said tube-holder, an auxiliary counterbalancing means for said shutter-mechanism and said screen-holding device, and means for holding said auxiliary counterbalancing means in inoperative position, said means when released being adapted to allow said auxiliary counterbalancing means to be supported on said counterbalancing means for said tube-holder.

27. The combination of a support, a member supported on said support and movable up and down thereon, main counterbalancing means for said member, an element releasably connected with said member, auxiliary counterbalancing means for said element, and a member releasably supporting said auxiliary counterbalancing means in position to engage said main counterbalancing means, said member being withdrawable from such supporting position to release said auxiliary counterbalancing means

for movement with said main counterbalancing means.

28. The combination of a support, a member disposed on said support and movable up and down thereon, main counterbalancing means for said member, an element releasably connected with said member, auxiliary counterbalancing means for said element, and a movable member releasably supporting said auxiliary counterbalancing means in position to engage said main counterbalancing means and adapted to be withdrawn from supporting position upon raising said auxiliary counterbalancing means whereby to release said auxiliary counterbalancing means for movement with said main counterbalancing means.

29. The combination of a support, a member disposed on said support and movable up and down thereon, main counterbalancing means for said member, an element releasably connected with said member, auxiliary counterbalancing means for said element and presenting a shoulder, and a movable member having a shoulder adapted to interlock with said shoulder on said auxiliary counterbalancing means to releasably support said auxiliary counterbalancing means in position to engage said main counterbalancing means, said movable member being withdrawable from supporting position to release said auxiliary counterbalancing means for movement with said main counterbalancing means upon the lifting of said auxiliary counterbalancing means by said counterbalancing means.

30. The combination of a support, a member movably supported thereon, a flexible element connected at one end with said member and engaging between its ends said support and movable on the latter, a weight connected with the end of said flexible element for counterbalancing said member, a second element releasably connected with said member, a second weight, and a movable member on said support operating when in one position to releasably support said second weight in position to engage said first mentioned weight when the latter is raised and is supported thereon and when in another position to release said second weight for movement with said first-mentioned weight.

31. In an X-ray table, the combination of a frame, a table-top pivotally mounted thereon, tracks on said table-top, a tube-stand adjustable along said frame, a pivotally supported tube-holder movable above and below said table-top and vertically movable on said tube-stand, a bowl of material opaque to X-rays for receiving an X-ray tube, and means on said tube holder cooperating with said tracks on said table top to limit said tube holder to movement in a single plane shiftable with, below, and substantially parallel to said table-top.

32. In an X-ray table, the combination of a frame, a table-top pivotally mounted thereon, a tube-stand adjustable along said frame, a pivotally supported tube-holder vertically movable on said tube-stand, a bowl of material opaque to X-rays for receiving an X-ray tube, and means on said table top for guiding said tube-holder and adapting the latter to move in a single plane below, shiftable with and substantially parallel to said table-top.

33. In an X-ray table, the combination of a frame, a table-top pivotally disposed thereon, guide means on said table-top, a supporting member independent of and located beyond said table-top, a tube-holder engaging said guide means, a member movable on said supporting member and engaging at one end said tube-holder, and a counterbalance for said tube-holder connected with the other end of said member and disposed on said supporting member.

JULIUS J. GROBE.