Oct. 21, 1947. H. G. MARQUIS 2,429,521

ICE TRAY APPLIANCE

Filed Sept. 6, 1945

Fig. 1.

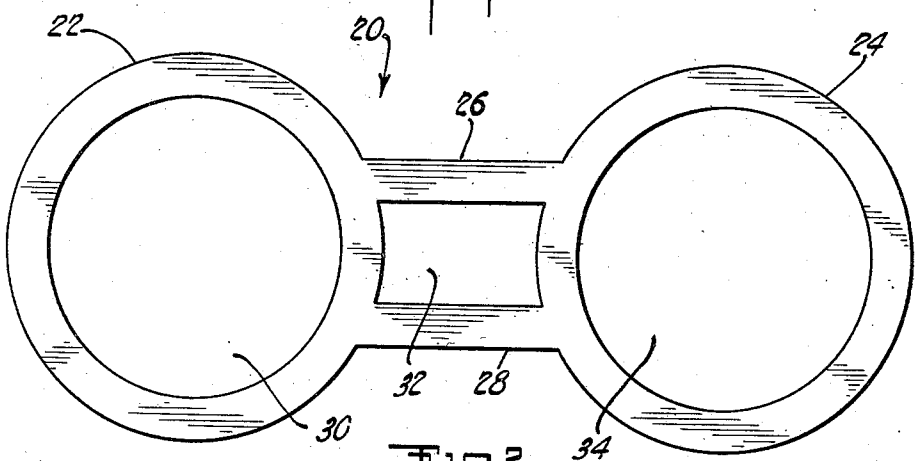

Fig. 2.

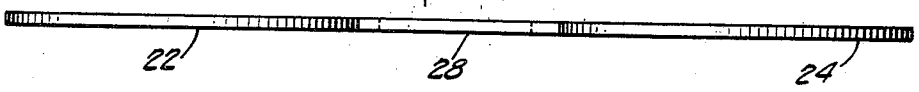

Fig. 3.

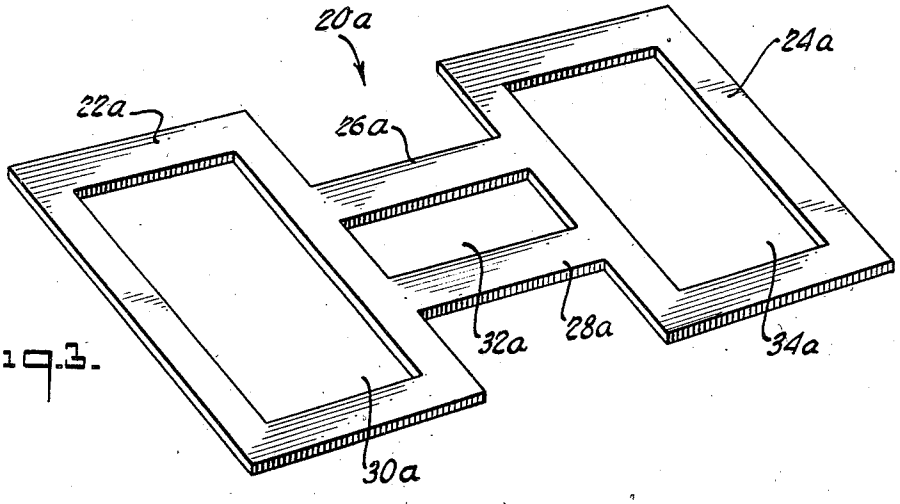

INVENTOR.
HARRY G. MARQUIS.
BY
Joseph V. Mergo
Attorney

Patented Oct. 21, 1947

2,429,521

UNITED STATES PATENT OFFICE

2,429,521

ICE TRAY APPLIANCE

Harry G. Marquis, New York, N. Y.

Application September 6, 1945, Serial No. 614,701

1 Claim. (Cl. 62—1)

1

This invention relates to means for preventing an ice tray from freezing to the shelf of a refrigerator evaporator. More particularly it pertains to an easily and inexpensively manufactured mat for spacing an ice tray from a freezing surface while at the same time promoting an efficient heat transfer relationship therebetween.

It is a matter of common knowledge that in many refrigerators the ice trays freeze securely to the evaporator surfaces while cubes are being frozen. Various attempts have been made to overcome this difficulty and to provide means for breaking the frozen bond where the formation of the bond could not be prevented. Among the devices heretofore suggested for preventing a frost bond from forming between the tray and evaporator is a mat of felt-like material impregnated with an anti-freeze solution of sodium chloride, glycerin, or the like. Among the devices suggested for breaking the ice bond between tray and shelf where its formation could not be prevented by chemical or electrical means are various tools for prying the tray loose from the shelf and various lever constructions forming a permanent part of the tray or shelf for effecting a leverage action therebetween. Another expedient consisted of providing the refrigerator shelf with ribs or bosses for reducing the area of contact surfaces between tray and shelf and hence reducing the extent of area of frost bond.

I have discovered an inexpensive and easily manufactured mat construction which does not suffer the disadvantages inherent in those mats relying upon chemical actions and which can be used with any conventional evaporator and tray to reduce greatly the adhesive action of frost or ice between shelf and tray. Furthermore my mat can be used without great reduction of heat transfer efficiency and prolongation of freezing time such as was inherent in the mats and other resorts previously used in the art.

It is an object of my invention to provide a mat of the character described having to a notable extent characteristics and capabilities above set forth. Another object is the provision of an ice tray mat which overcomes the difficulties common to the mats previously known. A further object is the provision of means which is inexpensively and easily manufactured and which serves effectively to prevent an ice tray from freezing solidly to the evaporator shelf. Other objects will be in part pointed out as the description proceeds and will in part become apparent therefrom.

The invention accordingly consists in the features of construction, combinations of elements, methods of operations and arrangements of parts as will be exemplified in the structure to be hereinafter described and the scope of the application of which will be set forth in the accompanying claim.

2

In the drawings:

Figure 1 is a plan view upon a reduced scale of an ice tray mat embodying the invention;

Figure 2 is a side elevation of the mat shown in Figure 1; and,

Figure 3 is a perspective view upon a reduced scale of a modified form of ice tray mat.

In Figure 1 a mat is generally indicated by **20** consisting of a pair of ring-like portions **22** and **24** held spaced apart by a pair of connecting strips **26** and **28**. The mat may be made of flexible sheet rubber or other material to which ice does not readily freeze. If made of rubber its surfaces may be halogenated, waxed, or otherwise treated to reduce the adhesive action of frost thereupon. Preferably, in accordance with the invention, the mat is made from organic sheet material having good insulating properties.

The mat illustrated has three large apertures **30**, **32** and **34** and preferably has over-all dimensions which are less than the over-all dimensions of the bottom of an ice tray. The result is that the tray is spaced by the thickness of the mat from the freezing surface and the majority of the under surface of the tray is maintained in good heat transferring relationship with the freezing surface. Cooling and freezing proceed by direct radiation and by convection from the circulating air, which acts as a secondary heat exchange medium between exposed tray bottom and freezing evaporator portions. Thus the mat spaces the tray from the shelf so that it cannot be frozen directly thereto and radiation of heat from the tray bottom to the opposing evaporator shelf is promoted at a rate depending upon the difference of the fourth powers of the absolute temperatures involved. The fact that the material of the mat is a poor heat conductor aids in preventing a tight bond between tray and evaporator. The area covered by the mat is so small that no appreciable loss of freezing efficiency results from the insulating characteristics of the mat material.

A modified type of mat is illustrated in Figure 3. Corresponding parts are identified by corresponding reference characters with the addition of an *a* to each.

Instead of using natural rubber, polymers in general of a plastic, elastic or resinous character

may be used including by way of example, polymerized chloro 2 butadiene 1,3 (neoprene), copolymers of butadiene with styrene or acrylic nitrile, copolymers of butadiene and isobutylene (butyl rubber), organic polysulfide polymers, polymers of vinyl esters, for example, polymers of vinyl chloride and copolymers of vinyl chloride and vinyl acetate, polystyrene, methyl methacrylate resins, phenol-formaldehyde resins, cellulose esters, for example, cellulose acetate and cellulose butyrate-acetate and numerous other substances of a plastic, elastic or resinous character.

From the foregoing it will be seen that an ice tray mat made in accordance with the present invention is well adapted to attain the ends and objects hereinbefore set forth, and to be economically manufactured since the entire structure is suited to common production methods and is susceptible to a wide latitude of variations as may be desirable in adapting the invention to different applications.

As various embodiments may be made of the above invention and as changes might be made in the embodiments above set forth, it is to be understood that all matter hereinbefore set forth or shown in the accompanying drawings is to be interpreted as illustrative and not in a limiting sense.

I claim:

An article constructed and adapted to lie flat on the surface of an evaporator shelf of a refrigerator and to support an ice tray and to slightly space a bottom surface of said tray from the opposed surface of the evaporator shelf and to prevent the tray from being frozen to said shelf, said article consisting of a pair of frames spaced apart and joined by strips, said frames and strips being composed of thin flat organic polymeric insulating material said frames and strips defining and enclosing spaces, the flat area of said frames and strips being a minor fraction of the area defined by the peripheral edges of said article, whereby the ice tray may be spaced slightly from the surface of the refrigerator shelf without impairing efficient heat transfer between said tray and shelf.

HARRY G. MARQUIS.

REFERENCES CITED

The following references are of record in the file of this patent:

UNITED STATES PATENTS

Number	Name	Date
1,239,642	Tolley	Sept. 11, 1917
1,751,899	Whitfield	Mar. 25, 1930
1,851,740	Townsend	Mar. 29, 1932
2,178,387	Becker	Oct. 31, 1929
2,266,007	Copeman	Dec. 16, 1941