United States Patent

Thomas

[15] **3,649,007**

[45] **Mar. 14, 1972**

[54] WHEEL-TYPE EXERCISE DEVICE

[72] Inventor: **Ross T. Thomas,** 1507 Lincoln Avenue, Corona, Calif. 91720

[22] Filed: **Mar. 12, 1970**

[21] Appl. No.: **18,969**

[52] **U.S. Cl.** .....**272/33 R**
[51] **Int. Cl.**.....**A63g 1/12**
[58] **Field of Search** .....272/33 R, 33 A, 33 B, 51, 50, 272/1 R, 57 A, 58

[56] **References Cited**

UNITED STATES PATENTS

3,084,935	4/1963	Brown	272/33 R
2,467,338	4/1949	Sellards	272/33 R
2,193,154	3/1940	Antinori	272/51 X
3,269,746	8/1966	Jonker	272/57 A X
1,283,210	10/1918	Kinney	272/58
2,862,710	2/1958	Lewis	272/33 R

Primary Examiner—Anton O. Oechsle
Assistant Examiner—Arnold W. Kramer
Attorney—M. Ralph Shaffer

[57] **ABSTRACT**

The present invention comprises an exerciser device taking the form of an annular tilted platform or support having a central stub shaft or the like. The platform is provided with means for enabling hand and foot placement, this so that the user, by shifting his weight, may revolve the device about an axis disposed proximate the point of contact of the stub shaft with its support plane. The stub shaft may be supported and/or journaled by appropriate means when desired.

2 Claims, 7 Drawing Figures

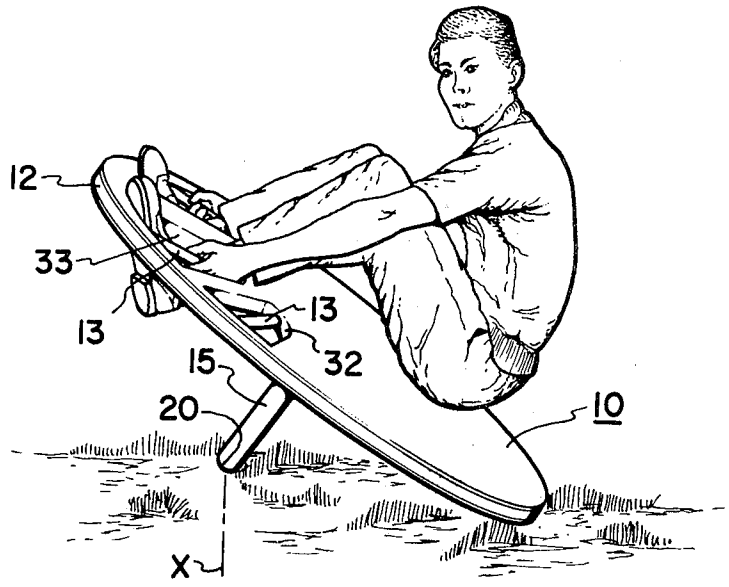

FIG. 1

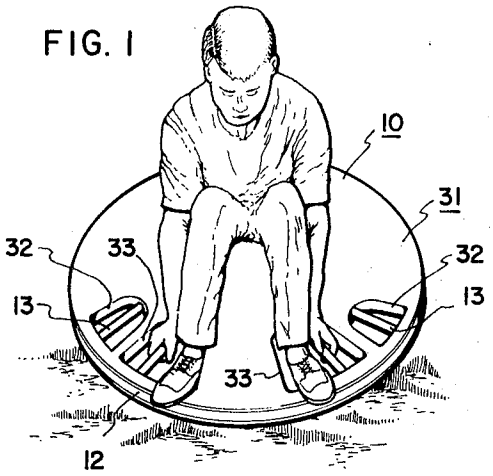

FIG. 2

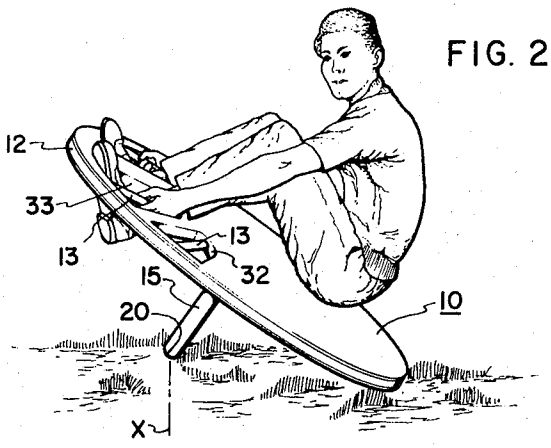

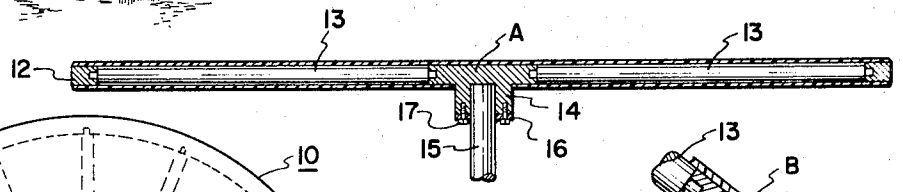

FIG. 4

FIG. 3

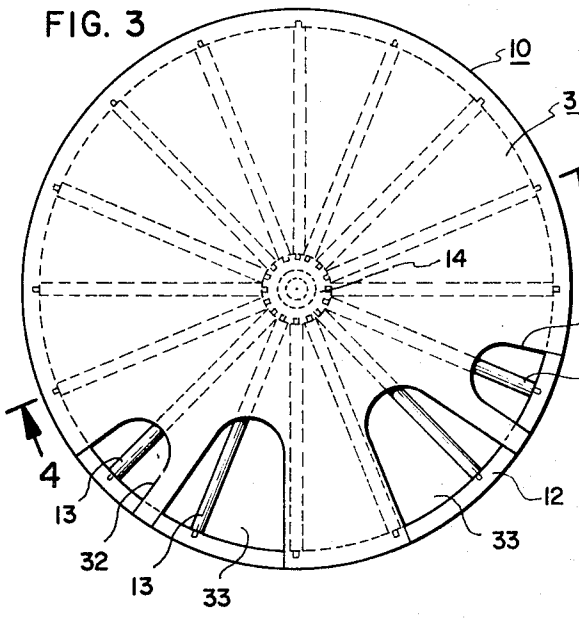

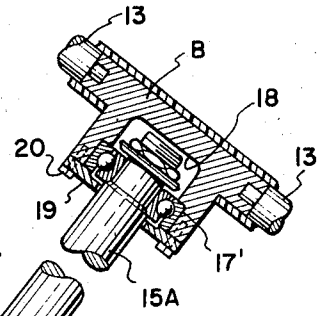

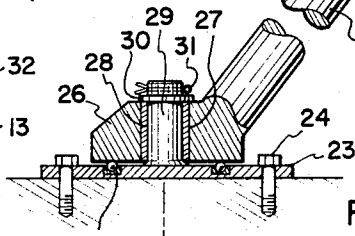

FIG. 5

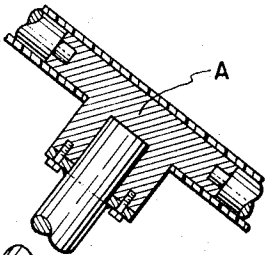

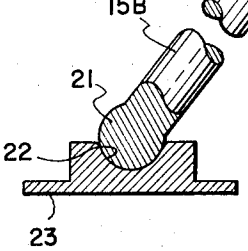

FIG. 6

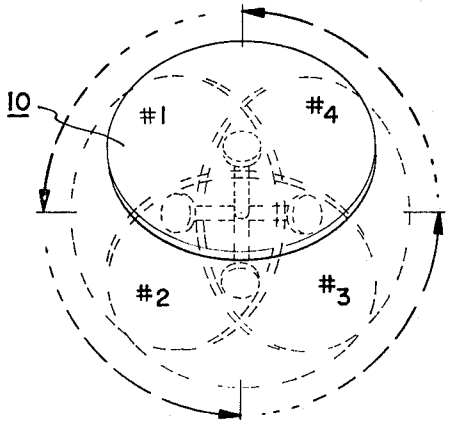

FIG. 7

INVENTOR.
ROSS T. THOMAS
BY M. Ralph Shaffer
HIS ATTORNEY

WHEEL-TYPE EXERCISE DEVICE

The present invention relates to exercise devices and, more particularly, provides a new and improved exercise device for strengthening muscles of the arms and back of the user.

The device resembles somewhat a wagon wheel provided with a short stub shaft. It differs from the same in that a support covering is disposed over the spokes of the "wheel," with suitable hand and foot openings being provided in such support so that the user may suitably place his hands and feet preparatory to use of the device.

Preferably included in the design is a hub associated with the spokes, which hub is specifically designed not to protrude above the support plane of the device. The end of the stub shaft may be either rounded, for ground or floor contact, or provided with a support plate to prevent scratching of floors, and, optionally, may include a journaling portion, if desired. The stub shaft itself may be either keyed, welded or even journaled to the "wheel" of the device. Thus, by grasping the device in the manner shown in the drawings and as described hereinafter, the user may shift his weight either to the right or to the left so that a clockwise or counter-clockwise rotation of the device is achieved, relative to a vertical axis passing proximate the point of contact of the stub shaft with its ground support plane. In doing the same, one enjoys an exhilerating exercise which improves muscle tone and overall physical strength and endurance. The exercise device of the present invention is particularly suited to those whose physical conditions do not allow for jogging, sit-ups, or the more strenuous activities.

Accordingly, a principal object of the present invention is to provide a new and improved exercise device.

An additional object of the invention is to provide an exercise device providing a revolving tilting movement for the user, this so that the user may enjoy optimum benefits through improvement muscle tone, strengthening of the arm and back muscles, and so forth.

An additional object is to provide a new and improved exercise device resembling a wheel having a short stub shaft, but with the same including a support means suitably contoured to accommodate hand and foot placement.

An additional object is to provide a tilted wheel-type exercise device wherein the stub shaft thereof is precluded from scratching floors or marring other support plane surfaces.

The features of the present invention which are believed to be novel are set forth with particularity in the appended claims. The present invention, both as to its organization and manner of operation, together with further objects and advantages thereof, may best be understood by reference to the following description, taken in connection with the accompanying drawings in which:

FIG. 1 is a frontal, perspective view of the device of the present invention when used by the person desiring physical exercise by manipulation of the device.

FIG. 2 is a side view of the structure of FIG. 1, wherein the user by his own weight, through the shifting of weight, is able to revolve the same.

FIG. 3 is a top plan of the device of FIGS. 1 and 2.

FIG. 4 is a central vertical section taken along the line 4–4 in FIG. 3.

FIG. 5 is an elevation, principally in sectional view, of the device of the present invention when the same includes a shaft journaled both to the "wheel" of the device and also to a support means thereof.

FIG. 6 is similar to FIG. 5, but illustrates optional structure in which the shaft is welded to the wheel structure and supported by a bearing base of simple design.

FIG. 7 is a schematic view indicating the rotative movement of the device, upon advancement thereof in a counter-clockwise direction.

In FIG. 1, the exercise device 10 includes a wheel member 11 having annular, preferably circular rim 12, and a plurality of spokes 13 meeting at hub 14. As thus far described, the device may resemble a wagon wheel, but with the exception that the hub 14 does not protrude upwardly from the general plane of the rim and spokes. Spokes 13 may comprise dowels

which have their opposite ends turned down as illustrated in FIG. 4, for suitable fitting into the rim 12 and central hub 14. As to hub 14, the same may take the form as shown at A in FIG. 4, for example, or as shown at B in FIG. 5. In FIG. 4, the hub simply receives stub shaft 15 which is welded to plate 16. The latter is mounted by bolts 17 to the hub in the manner illustrated. In FIG. 5, a shaft 15A is journaled by bearing means 17 into the hub cavity 18 of the hub. A backing plate 19 is secured by bolt means 20 to the hub at B in FIG. 5. Accordingly, it is seen that the stub shaft 15 or 15A, by way of example, may be either fixed as by welding or other means, to the wheel hub, or may be journaled relative thereto.

In FIG. 2, the stub shaft 15 includes a rounded end 20 which engages the turf or floor, for example, without digging into or marring the same. Accordingly, the user may revolve in the manner shown in FIG. 7 without the stub shaft chancing to deface the supporting surface. Of course, if desired the stub shaft as at 15B in FIG. 6 may be rounded at 21 and, thereat, engage the corresponding rounded surface 22 of support plate 23. This is particularly suited to indoor use so that the end of the stub shaft will not scratch any floor surfaces.

For permanent installations as in gymnasiums, there may be provided a floor plate 23', as in FIG. 5, which is bolted by bolt means 24 to the floor. Support means 25 comprises a thrust bearing which supports block 26. Block 26 may form an integral portion of stub shaft 15A, with the block 26 including aperture 27 for receiving bronze bushing 28. The latter serves as journaling means for an upstanding journal post 29; post 29 is secured to or integral with plate 23'. Washer 30 is retained in place by cotter pin 31.

In the structure of FIG. 5, designed as a more or less permanent installation, the wheel device is free to revolve about the vertical axis A of the journaling structure.

Most important in the present invention is the provision of a support layer 31. This may comprise fiber glass, a plastic supporting surface, a plywood layer, and so forth. In any event, support layer 31 is secured over the wheel structure by glue, staples or other securement means, and includes access apertures 32, 33 for hands and feet. It is noted that access apertures 33 may be spaced somewhat off-center relative to the spokes aligned therewith, this in order to accommodate foot placement and also hand placement thereat, if desired. Of course, optional hand apertures 32 may be utilized to obtain a wider spread for grasping. Again, so long as the hub does not protrude upwardly, then a flat surface for the user may be accommodated.

FIG. 7 illustrates revolvement positions, i.e., positions No. 1–4 as the device is rotated in a counter-clockwise direction by the user shifting his weight appropriately. The user will grasp the object in the manner shown in FIG. 1 and place his hands and feet accordingly. Optionally, the user may grasp the outermost spokes aligned with access apertures 32 so as to obtain a wider spread and more rapid revolvement of the device.

Upon assuming such posture, the user will simply "weight" the device either to the right or the left, so that the same will revolve about a vertical axis X passing essentially through the point of contact of the stub shaft with the support surface. Progressive revolvement will prove very exhilerating to the user and will aid substantially in improving muscle tone of the upper arms and back.

It is noted that so that the weight of the user is used to revolve the device about its own axis and also about a vertical axis passing essentially through the point of contact of the stub shaft with the supporting surface. As seen, the device is suitable for use both out-of-doors and also indoors.

While particular embodiments of the present invention have been shown and described, it will be obvious to those skilled in the art that changes and modifications may be made without departing from this invention in its broader aspects.

I claim:

1. An exercise device including, in combination, an annular support means; stub shaft means centrally mounted at one end thereof to said support means at an underneath side thereof to

contact at its remaining extension end an external support, said support means including hand grasping means and foot support means, whereby a person may retain himself upon said support means while shifting his weight thereover, so as to cause said support means to revolve about the area of contact of said extension end of said shaft means relative to said external support, and wherein said support means comprises a wheel having a rim, a central hub mounted to said stub shaft means, a series of mutually radially spaced spokes engaging said rim and said hub, and a planar support layer disposed over and secured to said wheel and having access apertures disposed proximate said rim and aligned with selected ones of said spokes, to facilitate hand-grasping of the latter, said device being unobstructed above said support layer, said hub being positioned solely beneath said support layer, and said apertures being disposed solely within one-half of said support layer, the remaining half of said support layer being constructed to comprise a continuous seating support layer.

2. Structure according to claim 1 wherein said foot support means includes aperture means in said support layer proximate said rim for enabling foot placement thereat.

* * * * *