G. H. CARGIN.

WELL TILE PLACING TOOL.

APPLICATION FILED APR. 3, 1915.

1,169,004.

Patented Jan. 18, 1916.

2 SHEETS—SHEET 1.

Fig. 1.

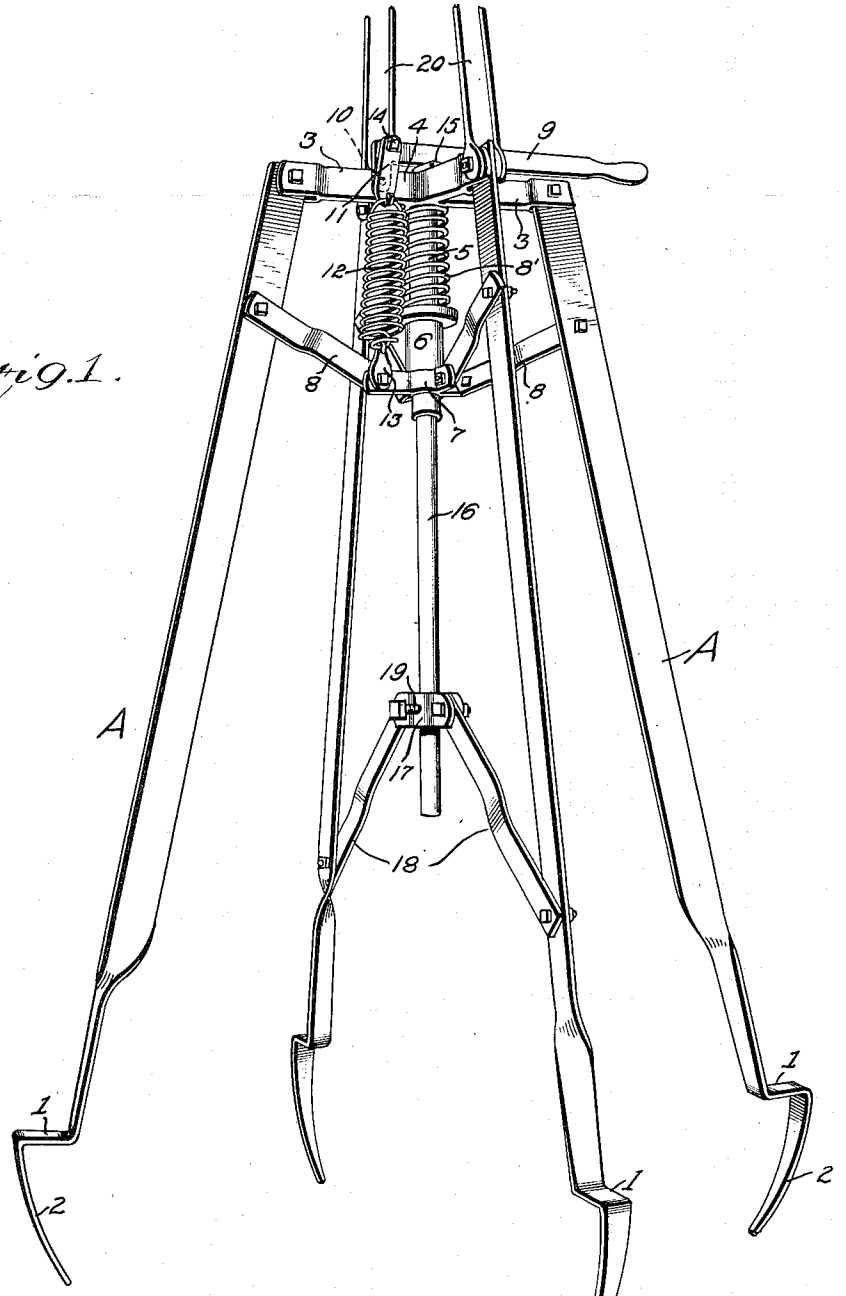

WITNESSES:

H. C. Barry

Broadway.

INVENTOR

George H. Cargin

BY Munn & Co

ATTORNEYS

G. H. CARGIN.

WELL TILE PLACING TOOL.

APPLICATION FILED APR. 3, 1915.

1,169,004.

Patented Jan. 18, 1916.

2 SHEETS—SHEET 2.

Fig. 2.

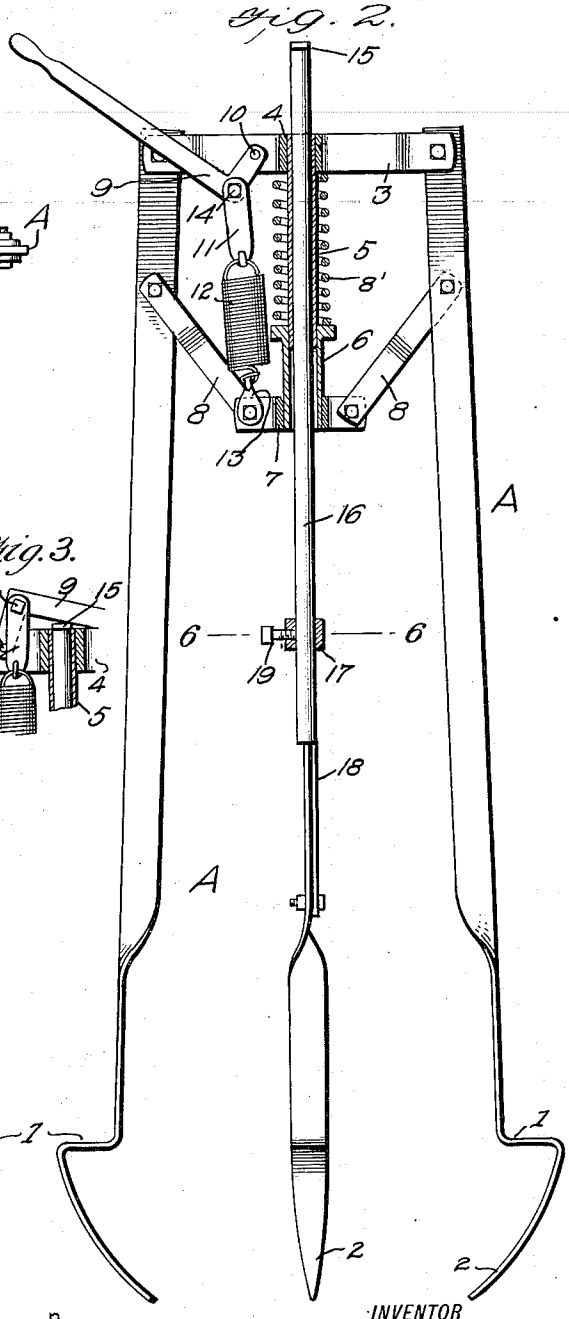

Fig. 5.

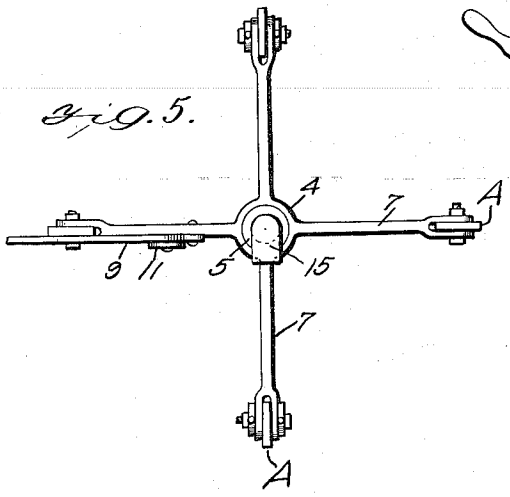

Fig. 3.

Fig. 4.

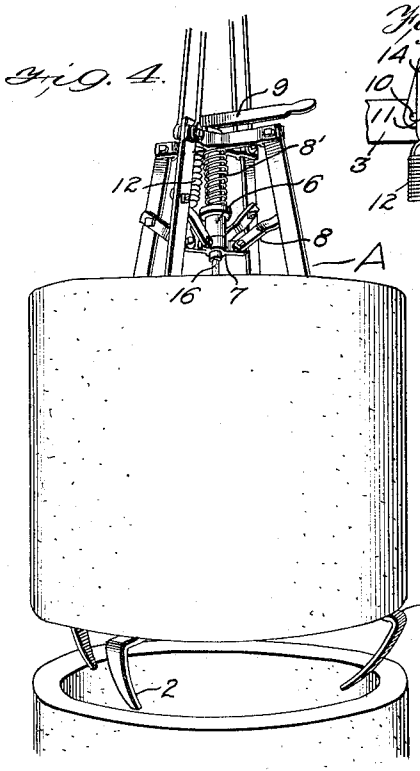

WITNESSES:

F. C. Barry

C. Bradway

Fig. 6.

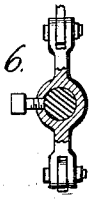

INVENTOR

George H. Cargin

BY Munn & Co

ATTORNEYS

UNITED STATES PATENT OFFICE.

GEORGE H. CARGIN, OF MARCUS, IOWA.

WELL-TILE-PLACING TOOL.

1,169,004. Specification of Letters Patent. Patented Jan. 18, 1916.

Application filed April 3, 1915. Serial No. 18,918.

To all whom it may concern:

Be it known that I, GEORGE H. CARGIN, a citizen of the United States, and a resident of Marcus, in the county of Cherokee and State of Iowa, have invented a new and Improved Well-Tile-Placing Tool, of which the following is a full, clear, and exact description.

This invention relates to a tool for placing well tiles in position, one on top of another, and while the tool is especially adapted for this work it is not necessarily limited thereto.

The object of the invention is to improve and simplify the construction and operation of tools of the character referred to so as to be reliable and efficient in use, comparatively simple and inexpensive to manufacture, and so designed as to be readily manipulated.

A further object of the invention is the provision of a tool adapted to be placed within a tile and then to be expanded for gripping the latter for lowering into a well, the tool having automatic means for effecting its release from the tile as soon as the last previously laid tile has been reached, the releasing of the tool enabling same to be withdrawn while the tile is left in position.

A more specific object of the invention is the provision of simple and effective means for locking the tile gripping elements in gripping position and in conjunction therewith an automatic device for unlocking the said locking means so that the tool will be released from the tile.

With such objects in view, and others which will appear as the description proceeds, the invention comprises various novel features of construction and arrangement of parts which will be set forth with particularity in the following description and claims appended hereto.

In the accompanying drawings, which illustrate one embodiment of the invention, and wherein similar characters of reference indicate corresponding parts in all the views, Figure 1 is a perspective view of the tool locked in expanded position; Fig. 2 is a vertical section of the tool contracted; Fig. 3 is a detail view showing the parts of the locking device in locking position; Fig. 4 is a perspective view of the tool while carrying a tile and about in the act of laying the tile on the lower one already laid; Fig. 5 is a plan view of the upper portion of Fig. 2; and Fig. 6 is a sectional view on the line 6—6, Fig. 2.

Referring to the drawing, A designates the tile-engaging elements which are in the form of bars having outwardly bent portions 1 at their lower ends to engage under a tile and support the same, and below these offset portions 1 the elements A curve inwardly to form guides 2, which, by entering a tile already laid, will center the tile carried by the tool. In the present instance four tile-holding elements A are shown, but the number may be varied and the upper ends are respectively pivoted to the outer ends of arms 3 of a spider or head 4, the hub of which is provided with a depending tube or sleeve 5 that forms a guide for a sliding sleeve 6 carrying a head 7 that is connected by links 8 with the arms or elements A, which links expand or contract the tool by the sliding of the sleeve 6 on the guide 5. Between the upper end of the sleeve 6 and the hub of the head 4, and surrounding the guide 5, is a helical compression spring 8′ tending to force the sleeve 6 downwardly, whereby the tool is contracted.

The device for expanding the tool includes means whereby the device is automatically locked when the tool is expanded, and since the tool is locked provision must be made for automatically unlocking the tool from the tile when the tool and tile are lowered into a well and have reached a point where the tile must be laid. The operating means includes a hand-actuated lever 9 of L-shaped form which is fulcrumed at 10 on one of the arms of the head 4, and at the elbow of this lever is pivoted a link 11, the lower end of which is suitably formed to connect with the upper end of a helical extension spring 12, which spring has its lower end connected by a hook or equivalent device 13 with the movable head 7. When the lever 9 is moved in a clockwise direction, Fig. 2, for expanding the tool, the pivotal point 14 swings an arc around the pivot 10, and as soon as the pivot 14 passes to the right of a line extending through the pivot 10 and the lower end of the spring 12, the said spring contracts and holds the lever in locking position, as shown in Fig. 3, where the lever is engaged with a stop or lug 15. This lug is carried by a centrally disposed vertically movable rod 16 that is movable in the guide 5 and forms part of the automatic device for unlocking the lever 9. On the lower end of this rod 16 is a cross-head 17 connected by links 18 with two diametrically opposite arms A,

said cross-head being secured in adjusted position on the rod 16 by a set-screw 19, the adjustment being provided for adapting the tool for tiles of different diameters. When the tool is about to be laid on a lower tile, as shown in Fig. 4, the centering extremities 2 by engaging the lower tile are forced inwardly, which movement is communicated through the links 18 to the rod 16, moving the latter upwardly far enough to throw the pivot 14, Fig. 3, to the left of the dead center line passing through the pivot 10 and the lower pivoted end of the spring 12, whereby this spring contracts and unlocks the device, the unlocking being accompanied by the downward movement of the head 7 under the expansive force of the spring 8′, the result being that the tool is automatically contracted so that it can be raised out of the well to receive another tile. The tool can be suspended in any suitable manner, as, for instance, by hanger links 20 connected with a cable or rope. In inserting the tool the elements A will be in the position shown in Fig. 2, and then by operating the locking lever 9 the head 7 is raised, and this in turn operating through the links 8 throws the elements A outwardly, as shown in Fig. 1, to grip a tile in the manner shown in Fig. 4. The tile is now lowered into the well and finally the tool by striking the uppermost tile already laid is automatically released.

From the foregoing description taken in connection with the accompanying drawings, the advantages of the construction and method of operation will be readily understood by those skilled in the art to which the invention appertains, and while I have described the principle of operation, together with the device which I now consider to be the best embodiment thereof, I desire to have it understood that the device shown is merely illustrative and that such changes may be made when desired as fall within the scope of the appended claims.

Having thus described my invention, I claim as new and desire to secure by Letters Patent:

1. A tool of the class described comprising a plurality of tile-carrying elements, a head to which the upper ends of the elements are pivoted, a movable head disposed under the first-mentioned head, links connected with the movable head and with the elements for moving the latter inwardly and outwardly, means acting on the movable head and tending to move the latter in a direction to contract the tool, an automatically locked operating device connected with the movable head for moving the same to expand the tool, said elements having means for engaging a tile previously laid, whereby the elements are moved to a position for releasing the tile carried by the tool, and means actuated by the initial movement of the element and engaged with a laid tile for unlocking the said operating means to permit the tool to contract.

2. A tile laying tool comprising a plurality of elements adapted to hold a tile to be laid and lie within the tile, the lower ends of the elements being curved inwardly to form tile-centering means by engaging a tile already laid, a device for holding the elements of the tile in expanded position, means operating on the device and connected with the elements for receiving motion therefrom when the elements engage a laid tile, whereby the device is unlocked, and means for operating on the elements to contract the tool when the said device is unlocked.

3. A tool of the class described comprising a plurality of tile-carrying elements, a head to which the elements are pivotally connected, a movable head connected with the elements to move the same inwardly and outwardly by the movable head moving toward and from the first-mentioned head, a spring operating between the heads to move the movable head in a direction tending to contract the tool, a longitudinally movable rod guided through the heads, links connected with the elements and adjustably connected with the rod for imparting movement thereto, a lever pivotally mounted on the first-mentioned head, means connecting the lever with the movable head, such means including a spring which locks the lever in a position with the said elements expanded and operatively related with the said rod, whereby the latter begins the unlocking movement of the lever while the last-mentioned spring completes the unlocking movement, whereby the tool is automatically contracted by the first-mentioned spring.

4. A tile laying tool comprising a head, inwardly and outwardly swinging hook-shaped tile-carrying elements pivotally mounted on the head and having their lower extremities shaped to engage a laid tile and thereby center the tile carried by the tool, a movable head disposed under the first-mentioned head, a guide carried by the first-mentioned head and on which the second head is slidable, links connecting the second head with the said elements, a compression spring surrounding the guide and interposed between the heads to contract the tool, an extension spring connected with the movable head, a link connected with the spring, an operating lever fulcrumed on the first head and pivotally connected with the link to operate through the latter and spring to move the movable head in a direction to expand the tool, said link and spring being adapted to assume an off dead center position, whereby the lever is locked with the tool expanded, and means operating on the lever to throw the same beyond dead center

position when the lower ends of the tile-carrying element engage a laid tile, whereby the compression spring effects the contraction of the tool.

5. A tile laying tool comprising a head, inwardly and outwardly swinging hook-shaped tile-carrying elements pivotally mounted on the head and having their lower extremities shaped to engage a laid tile and thereby center the tile carried by the tool, a movable head disposed under the first-mentioned head, a guide carried by the first-mentioned head and on which the second head is slidable, links connecting the second head with the said elements, a compression spring surrounding the guide and interposed between the heads to contract the tool, an extension spring connected with the movable head, a link connected with the spring, an operating lever fulcrumed on the first head and pivotally connected with the link to operate through the latter and spring to move the movable head in a direction to expand the tool, said link and spring being adapted to assume an off dead center position, whereby the lever is locked with the tool expanded, and a longitudinally movable rod movable to engage the lever for unlocking the same, an adjustable cross-head on the rod, and links connected with the cross-head and said elements whereby the inward movement of the latter, due to engagement with a laid tile, operates the rod to start the unlocking of the lever while the extension spring completes the unlocking for permitting the tool to contract and release the tile.

In testimony whereof I have signed my name to this specification in the presence of two subscribing witnesses.

GEORGE H. CARGIN.

Witnesses:
F. BERT POPKES,
I. G. LAUDERGANS.