No. 616,137.

Patented Dec. 20, 1898.

P. PERRET.

APPARATUS FOR CLEARING THREADS OR YARNS OF SILK, &c.

(Application filed Dec. 29, 1897.)

(No Model.)

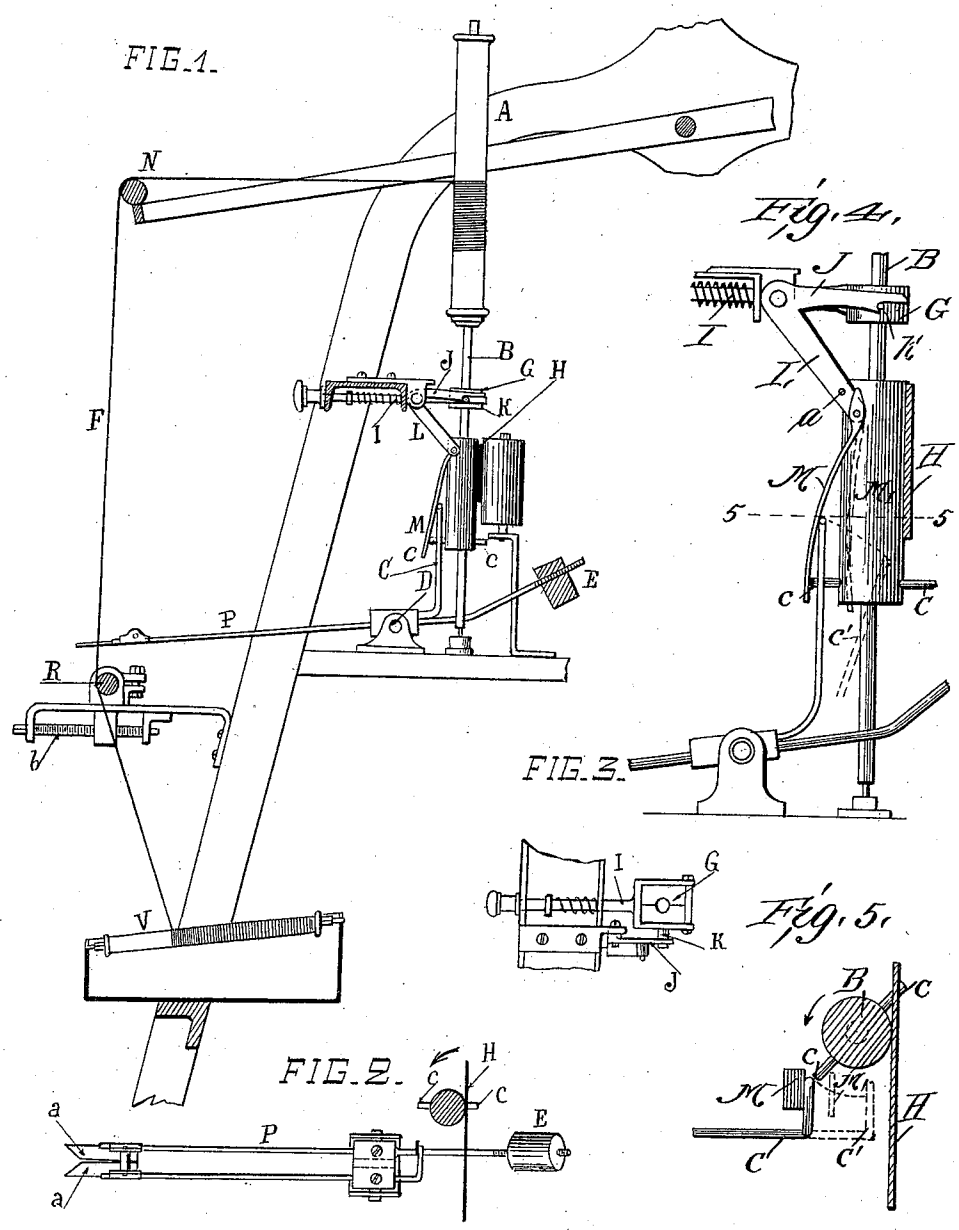

Witnesses

E. B. Bolton

Otto Munk

Inventor:

Pierre Perret

By [signature]

his Attorneys.

THE NORRIS PETERS CO., PHOTO-LITHO., WASHINGTON, D. C.

UNITED STATES PATENT OFFICE.

PIERRE PERRET, OF LYONS, FRANCE.

APPARATUS FOR CLEARING THREADS OR YARNS OF SILK, &c.

SPECIFICATION forming part of Letters Patent No. 616,137, dated December 20, 1898.

Application filed December 29, 1897. Serial No. 664,232. (No model.)

To all whom it may concern:

Be it known that I, PIERRE PERRET, a citizen of the Republic of France, residing at Lyons, France, have invented a certain new and useful Apparatus for the Clearing of Threads or Yarns of Silk or other Textile Materials, (for which I have obtained patents in France deposited March 28, 1896, granted July 10, 1896, No. 255,216, and in Great Britain dated June 6, 1896, No. 12,456,) of which the following is a specification.

The clearing has for its object to rid silk and other threads or yarns of knots, noils, sluds, lumps, or other impurities in order to render them fit for weaving. Apparatus hitherto employed for this purpose requires constant attention in order to stop the motion of the thread when a knot, noil, slud, or other impurity too large or too strong is presented to the parts which should remove them.

The object of the improved apparatus is to render automatic the stoppage of the thread or yarn which is under these conditions, at the same time continuing the progress of the others, thereby enabling the operator to superintend a considerably greater number of threads or yarns and to give them a greater speed. The amount of work done is thus increased and the causes of breakage and waste are avoided, which were impossible to prevent in apparatus hitherto in use.

In the drawings, Figure 1 is a side view of the invention; Fig. 2, a plan view, partly in section; Fig. 3, a detail view. Fig. 4 is an enlarged detail view, and Fig. 5 is a section on line 5 5 thereof.

Figs. 1 and 2 show a single set of parts of the improved clearer acting upon a thread or yarn F delivered from a bobbin, reel, or other apparatus at V and wound up on a bobbin A, carried by a vertical spindle B. This winding is regulated along the length of the bobbin by the alternating vertical motion of the bar N, obtained by known means.

The clearer P consists of two plates *a a*, of glass or other suitable hard material, fixed to the end of a very light balance pivoted at D and equilibrated by a counterpoise E. The plates *a* leave between them a space or slit which decreases in width from its opening or mouth and within which the thread or yarn to be cleared enters to a greater or less distance. This entrance is limited, according to the thickness of the thread or yarn, by a bar R, the position of which can be regulated by screws *b*, mounted in its supports. The thread or yarn thus presented to the precise spot where it traverses the clearer with slight friction raises the latter immediately a knot, noil, or other projecting body is presented to it. This raising action is utilized in the following manner not only to suspend the motion of the winding on bobbin A, but further to slacken the thread in order to avoid every cause of breakage and enable it to follow the motion of the bar N, which distributes it upon the bobbin A.

The spindle B is supported in a bearing G, carried by a rod I, sliding horizontally in the framing and drawn backward by a spring. (See Figs. 1 and 3.) When this spring acts, it separates the spindle from the horizontal belt H, which gives motion to it and therefore stops it. To place it again in motion, it is necessary to press the button at the end of the rod I and to thus push the spindle against the belt. A stop J, jointed on the framing, then falls behind a projection K of the bearing G and holds it in position. The stop J carries an arm L, upon which is jointed a lightly-flexible finger-piece M, which bears upon an arm C of the clearer, by which it is held raised and beyond the action of the studs *c c* on the periphery of the spindle B. This position of the parts is shown more clearly in Fig. 4. The arm M projects slightly above its pivot connection with the arm L, and a stop-pin *a* in the arm L limits the pivotal movement of the arm M in relation to the arm L. The two positions of the parts M and C are shown in full lines and in dotted lines M′ C′ in Figs. 4 and 5. It follows from these arrangements that when the bobbin A is in motion a knot, noil, or other projection will raise the clearer P. The arm C, which is firmly fixed to it, relieves the finger-piece M, which then comes into contact with one of the studs *c* of the spindle in motion. This latter draws with it the finger-piece and with it the stop J, which rises. The rod I, under the action of its spring, then separates the spindle from the belt H. The pressure of the stud *c* upon the arm M, which is now arrested by the

stop *a*, tends to bend said arm, which is flexible, and as the spindle has now been separated from the belt and has come to rest the arm M in straightening out will give the spindle a reverse movement, unwinding a certain length of thread or yarn, which will enable the regulating-bar N to accomplish its movement without breaking or weakening the thread or yarn, the motion of which is suspended. The operator, warned by the stoppage of the spindle, can then quite at his ease remove the knot, noil, or other projection held in the clearer and replace the spindle in motion.

It will be understood that the set of parts above described is repeated in parallel positions on a machine the length of which is only limited by the facility for superintendence.

If this machine were employed for treating threads or yarns of different sizes, the bar R would be divided into several parts capable of separate regulation and each receiving threads or yarns of the same size.

In lieu of making the clearer a special apparatus, as above described, it can be combined with various machines for winding, reeling, doubling, or effecting other operations on threads or yarns. For that purpose it is only necessary to place in the course traveled by the threads or yarns the two principal parts—the oscillating clearer P and the bar R, which regulates the entrance of the thread or yarn between the plates *a a* of the clearer—the oscillating motion of the clearer, effected by the passage of a knot, noil, or other projection, being transmitted, as above described, to the means for winding the thread, but with arrangements which may be modified according to circumstances.

I claim—

In combination, the driving device, the spindle carrying the bobbin thereon and having a bearing at its lower end permitting lateral movement of the spindle with the bobbin to and from the driving device, means for drawing the spindle laterally, a device for holding the spindle up to the driving device, and releasing means comprising a flexible arm connected with the holding device, the stud on the spindle for engaging the said arm when it falls into the path thereof, and controlling means for the said arm controlled in turn by the yarn, substantially as described.

In witness whereof I have hereunto set my hand in presence of two witnesses.

PIERRE PERRET.

Witnesses:
YRIN RABILLONA,
GASTON JEANNIAUX.