Nov. 10, 1970 M. J. CROSTHWAIT 3,540,043

ALARM SYSTEM

Filed Oct. 19, 1967 2 Sheets-Sheet 1

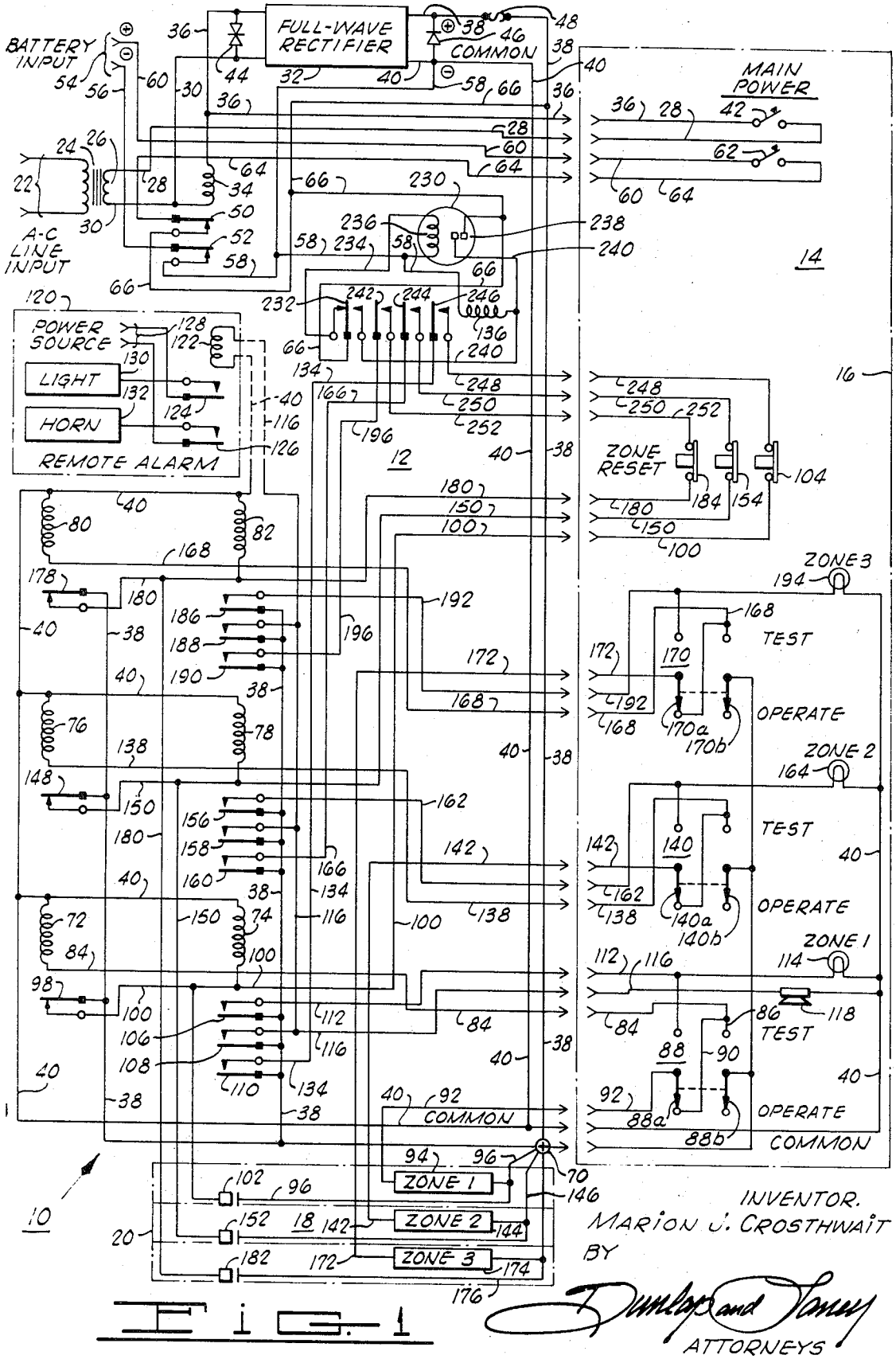

Fig. 1

INVENTOR.
MARION J. CROSTHWAIT
BY

Dunlap and Laney
ATTORNEYS

Nov. 10, 1970 M. J. CROSTHWAIT 3,540,043

ALARM SYSTEM

Filed Oct. 19, 1967 2 Sheets-Sheet 2

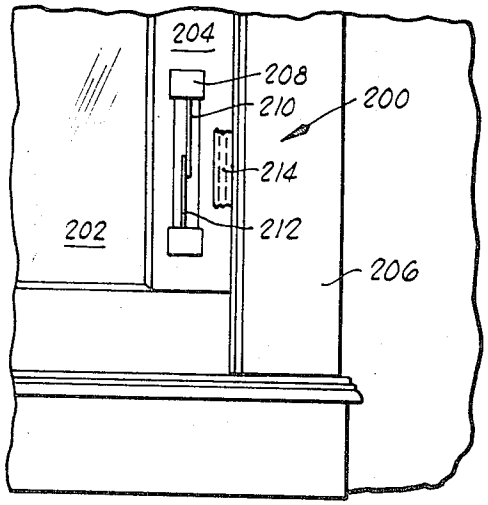

FIG. 3

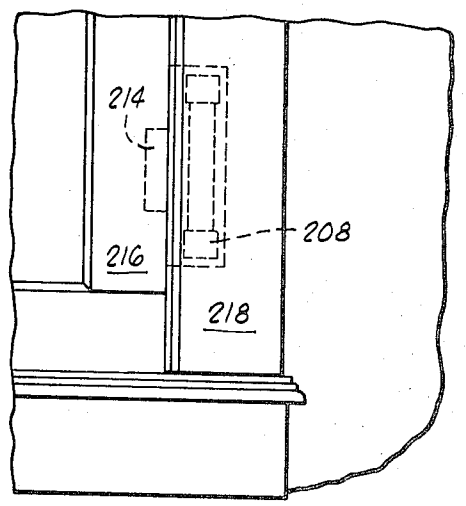

FIG. 4

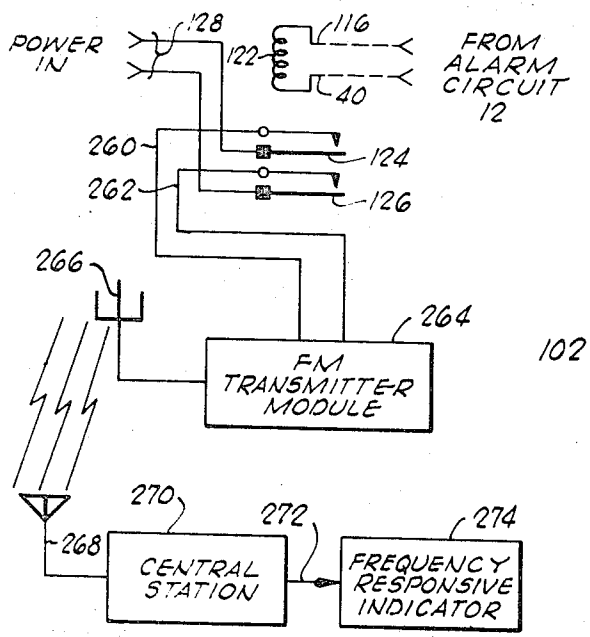

FIG. 5

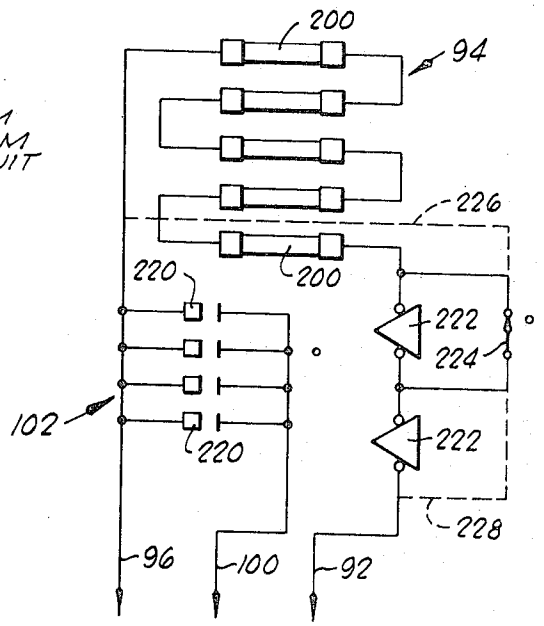

FIG. 2

INVENTOR.
MARION J. CROSTHWAIT

BY

Dunlap and Laney
ATTORNEYS

United States Patent Office 3,540,043 Patented Nov. 10, 1970

3,540,043

ALARM SYSTEM

Marion J. Crosthwait, 3108 N. Glen Oaks Drive, Midwest City, Okla. 73110

Filed Oct. 19, 1967, Ser. No. 676,483
Int. Cl. G08b *13/08, 17/06, 19/00*
U.S. Cl. 340—420 15 Claims

ABSTRACT OF THE DISCLOSURE

An apparatus for providing an alarm indication in response to any violation of the integrity of a building or such enclosure having access openings; the apparatus consisting of both a plurality of normally closed intrusion responsive switches as well as a plurality of normally-open, heat-sensitive fire detection switches, each of the pluralities of switches being distributed through zone divisions of the building or space being protected. The pluralities of detection sensors for each zone are then made responsive through a separate relay system such that alarm indications pertaining to intruder entry or fire will also indicate the general location in the building or such protected installation.

BACKGROUND OF THE INVENTION

Field of the invention

The invention relates generally to alarm systems and, more particularly, but not by way of limitation, it relates to improved electronic alarm systems for providing multi-zone indication of intruder entry and/or heat generation.

Description of the prior art

The prior art includes a great many types of alarm systems both of mechanical and electrical type which perform generally to give notice of intrusion into premises, fire on or near a property, etc. The prior types of electrical alarm systems take many forms, many of which avail themselves of electrical capabilities and are directed to subscription-type alarm systems wherein a plurality of buildings or outlying properties are protected with alarm indication being made to a central station. Still other forms of alarm systems have been devised for the protection of singular residence or business properties either through noise alarm, electrical light-up of the surroundings, energization of electrical barriers, and other forms of intruder discouraging devices. A primary shortcoming with previous types of alarm devices, especially from the viewpoint of one protecting a relatively small property or building, is the inordinately large expense and involvement which is necessary to install and maintain an adequate protective system.

SUMMARY OF THE INVENTION

The present invention contemplates an alarm system wherein a plurality of zones of a building or property to be protected may each be made responsive with all of their respective access openings and heat sensors to a separate actuation assembly which can give a continuous alarm indication. In a more limited aspect, the invention consists of circuitry divided into distinct zones, each zone including a first relay which is held continually energized to open a power supply circuit which is connected to energize a second, alarm-actuating relay. Each alarm-actuating relay then controls a plurality of normally-open contacts such that energization of the alarm-actuating relay, due to intruder entry or fire in the premises, will close its contacts to provide zone light indication, audible indication, and current holding actuation to prevent nullification of the alarm sequence. The apparatus includes

alternate A-C and D-C power supplies in interswitching relationship as well as time delay and holding relay assemblies for curing intermittent and short term power failures as well as certain transient voltage conditions.

Therefore, it is an object of the present invention to provide a burglar and fire alarm which is fool proof to a very high degree and which can be assembled, installed and maintained at a minimal cost.

It is also an object of the invention to provide an alarm system which gives a more pin-pointed indication as to the location of an intruder entry or fire situation in or about a protected building or premises.

Finally, it is an object of the present invention to provide a relatively inexpensive burglar and fire alarm system which is immune to effects of power failure, line voltage fluctuations and lightening effects, and which is constructed of reliable components that require little or no maintenance for long periods of time.

Other objects and advantages of the invention will be evident from the following detailed description when read in conjunction with the accompanying drawings which illustrate the invention.

BRIEF DESCRIPTION OF THE DRAWINGS

FIG. 1 is a schematic drawing of the alarm system which constitutes the invention;

FIG. 2 is a schematic diagram of intruder entry and fire sensor circuitry and switch array in one zone of the alarm system of FIG. 1;

FIG. 3 is a generally idealized illustration of one form of intruder entry sensor switch which may be employed in the circuitry of FIG. 1;

FIG. 4 illustrates a variation in position and mounting of the sensor switch of FIG. 3; and

FIG. 5 is a block diagram of an alternative usage of the alarm system whereby centralized surveillance is made possible.

DESCRIPTION OF THE PREFERRED EMBODIMENT

Referring to the drawings in detail, FIG. 1 is a schematic representation of an alarm system **10** consisting of alarm circuitry **12**, control circuitry **14** within dot-dash lines **16**, and sensor circuits **18** within dash line **20**. The alarm system **10** is shown as being one which includes circuitry for these separate zones or alarm divisions; however, it should be understood that any number of zones from one to some plurality may be designed into the system by merely paralleling the necessary components. Also, the zone division about a protected area as well as the number of sensor points within each zone is entirely a matter of choice, this depending upon the particular circumstances of each application.

The alarm circuitry **12** may be mounted on a single chassis (not shown) and positioned at some central location in or about the protected space. Alarm circuitry **12** may receive a primary source of power from the A-C line input **22**, e.g. regular house power. The A-C input leads **22** are then applied through the step-down, isolating transformer **24** and a reduced voltage, A-C output is present across the secondary **26** between leads **28** and **30**. The value of A-C voltage across leads **28** and **30** should be of a relatively low order which allows a rectified output of 12 volts D-C; this is then compatible with the voltage requirements of selected standard relays and a standby D-C power source.

The A-C lead **30** is connected to one input of a full-wave rectifier **32** and, in parallel, it is connected to a relay coil **34**. The remaining side of relay coil **34** is then connected to a lead **36** to the remaining input connection to full-wave rectifier **32**. Thus, A-C energization is applied to full-wave rectifier **32** and a D-C output is available between the D-C

power output leads 38 and 40. The other A-C lead 28 is connected to a main power switch 42 on remotely located control circuit panel 14 and return energization is completed via lead 36 to energize full-wave rectifier 32. A pair of transient voltage suppressors 44 and 46 are connected across the respective input and output of full-wave rectifier 32. Both of the non-polarized transient suppressor 44 and the polarized transient suppressor 46 may be well-known types of bi-lateral blocking and clipping circuits as are commercially available from the Sarkes-Tarzian Corp. of Bloomington, Ind. A suitable fuse 48 may be included in series in the D-C power output lead 38, output lead 40 being designated as the common lead.

Alarm circuitry 12 makes provision for standby power in the event of power failure to A-C input lead 22. Thus, the relay 34 (normally energized) controls a pair of normally-closed contacts 50 and 52 which apply D-C input from battery input 54 in the event that line input fails and relay 34 is de-activated. That is, one side of the D-C connection is made through a lead 56, relay contact 52 and a lead 58 to the common side of D-C power output leads 40, and the remaining D-C voltage connection is made via a lead 60 through a remotely located main power D-C switch 62 for return on a lead 64 through relay contact 50 and then via a lead 66 to the positive lead 38 of the D-C output. A conventional-type of twelve volt battery source is sufficient for standby power.

The D-C power is available between common lead 40 and the positive lead 38 throughout the system and the positive lead 38 is connected to a terminal 70 which applies D-C current for application to each zone of the sensor circuit 18 as will be further described. In addition, the common lead 40 and positive lead 38 extend over to apply energization to the respective zone relay configurations, i.e., zone 1 relays 72 and 74, zone 2 relays 76 and 78, and zone 3 relays 80 and 82. Referring first to the zone 1 circuit, relay 72 is connected directly to common lead 40 with its other end connected via a lead 84 to the remotely located control circuit 14 for connection to a terminal 86 of a test-operate switch 88, a double-pole, double-throw switch assembly. When the test-operate switch 88 is in its operate position, as shown, the terminal 86 is shorted via lead 90 for conduction through switch wiper 88*a* and a circuit is completed via a lead 92 through a plurality of zone 1 sensors 94 for connection to return lead 96 to D-C terminal 70.

The zone 1 relay 72 has a single normally-closed contact 98 which is actuated open and maintained in that position continually during normal or quiescent state of the operative alarm system. The contacts 98 serve to complete a circuit between D-C power lead 38 and a lead 100 which applies a first energization through one or more heat sensors 102 for return via lead 96 to the D-C terminal 70, a second parallel branch of lead 100 is connected to energize zone 1 alarm relay 74, and a third branch of lead 100 is applied through a remotely located zone 1 reset switch 104, as will be further described.

Thus, the zone 1 alarm relay 74 is the actual alarm activating relay which is energized upon a de-energization of the zone 1 relay 72. Relay 74 has three normally-open relay contacts 106, 108 and 110, each of which is employed to connect the D-C power lead 38 to carry out alarm functions. The relay contact 106 applies D-C voltage via lead 112 to the remotely located control circuit 14 to energize a zone 1 indicator lamp 114 with return via common lead 40. The contact 108 of zone 1 relay 74 applies energizing voltage from D-C lead 38 to a lead 116 which is paralleled first to the control circuit 14 to actuate an alarm buzzer 118 with return via common lead 40 and, if desired, a parallel lead 116 can be applied to a remote alarm 120 which may be situated at some selected position. Remote alarm 120 may be activated by a relay 122 energized by power applied on lead 116 with return to common lead 40. A pair of normally

open contacts 124 and 126 may be employed to apply a power source 128 for actuation of an alarm light 130 and/or a suitable alerting horn 132. A third relay contact 110 of zone 1 alarm relay 74 provides an output of D-C voltage on a lead 134 to a holding relay 136, to be further described below.

Zone 2 alarm actuation is carried out in the identical manner. Relay 76 is connected to be normally energized through a lead 138 to a zone 2 test-operate switch 140 with return via a lead 142 through the zone 2 sensor circuits 144 to a return lead 146 connected to the D-C supply terminal 70. Relay 76 controls a normally-closed contact 148 (energized open) which controls application of D-C voltage from supply lead 38 through a lead 150 for conduction through fire sensors 152 with return to positive supply terminal 70, and D-C voltage is also applied through alarm relay 78 and the zone 2 reset switch 154. Zone 2 alarm relay 78 controls three contacts 156, 158 and 160 which apply D-C power from lead 38 as follows: Power is applied on lead 162 to energize the zone 2 lamp 164; on lead 116 to energize remote alarm 120 and/or the alerting buzzer 118; and finally, on a lead 166 to holding relay 136 as will be described.

The same interconnection will apply with respect to zone 3 and the relays 80 and 82 and any number of additional alarm zones which may be added by paralleling the similar connections and capabilities. Thus, relay 80 is energized via lead 168 through zone 3 test-operate switch 170 with return through lead 172 and the zone 3 sensor switches 174 and lead 176 to the D-C supply terminal 70. Relay contact 178 (energized open) controls application of D-C voltage from lead 38 to lead 180 to energize one or more fire sensor switches 182 as well as the zone 3 alarm relay 82, with parallel application to control circuit 14 and zone 3 reset switch 184. The normally-open relay contacts 186, 188 and 190 are then employed to apply the D-C energizing voltage from lead 38 to carry out the several alarm functions. Contact 186 supplies D-C voltage via a lead 192 to energize the zone 3 alarm indicator lamp 194. Relay contact 188 applies D-C voltage to the lead 116 for energizing remote alarm 120 and buzzer 118. And finally, relay contacts 190 energize a lead 196 to holding relay 136.

FIG. 2 illustrates one form of zone switch arrangement, here shown as the zone 1 interconnection of FIG. 1. Thus, the intruder sensor switches 94 will be in the form of a plurality of series-connected switch 200, each of which is situated near an access or intruder entry point such that it can function to open the circuit on being disturbed by such intruder entry.

FIG. 3 shows one form of intrusion sensor switch 200 which has been employed to good advantage. The intrusion sensor switch 200 is shown as employed with a window 202 having a window sash 204 which may be, for example, of the vertical sliding variety. The window is then contained in the window box or outer frame 206 in a predetermined position when properly closed. A magnetic reed switch 208 having magnetically responsive reed contacts 210 and 212 is secured on the window sash 204 and a small piece of permanent magnet 214 is secured to the outer frame 206 at a point adjacent magnetic reed switch 208 such that the magnetic attraction maintains the reed contacts 210 and 212 closed as long as the related components are properly positioned. Upon intrusion entry of movement of the window sash 204 relative to the outer frame 206 the reed contacts 210 and 212 will be broken to open the circuit and give alarm actuation.

It should be understood that the magnetic reed switch 208 is only one of many forms of intrusion sensor device 200 which would be employed. This selection will depend on the type of windows or doors in the establishment as well as the ability to hide or camouflage the intrusion sensor elements 200 on or about the access point. FIG. 4 shows a portion of a window and sash 216 within a win-

dow box **218** wherein both the permanent magnet slug **214** and the magnetic reed switch **208** are buried out of view. Such buried elements may be sunk into recesses in the window paneling and covered with wood filler or such or, in the case of metal sash, the sensor receptacles may be preformed. While the magnetic type of intrusion sensor **200** is desirable for smaller windows it is contemplated that foil stripping, proximity sensors and various other state-of-the-art sensing devices may be employed to provide intrusion activation to the alarm circuit **12**. It should be understood too that normally-open types of switches may also be employed for intrusion sensing, this necessitating the wiring of a zone array in parallel.

Referring again to FIG. 2, the zone fire sensors **102** may be parallel connected as between D–C supply lead **96** and lead **100** (See FIG. 1). The heat sensors **102** may be such as a plurality of normally-open, heat-fusible switches **220** which are commercially available for heat sensing and damage control purposes. The zone intrusion sensors **94** may also include one or more interlock-type switches **222** which are externally accessible at various door access openings. Thus, a suitable secret or key switch **224** can be connected in parallel around one or more of the interlock switches **222** to enable or disable the intrusion alarm system. A pair of dash lines **226** and **228** indicate that the enabling function of key switch **224** may be exercised over selected switches or over the entire intrusion alarm switch assembly.

The holding relay **136** and a time delay relay **230** provide additional safeguards which strengthen the alarm system against various intruder disabling techniques, intermittent power failure, line voltage fluctuation, etc. The D–C voltage, present across leads **66** and **58** from main D–C leads **38** and **40**, applies initial energization to time delay relay **230** which, after a selected delay, actuates the holding relay **136**. Initial current flow proceeds on leads **66** through relay contact **232** in its normally-closed position for conduction on a lead **234** through actuating coil **236** of time delay relay **230** with return to the common side or D–C lead **58**. This current flow energizes the normally-open time delay relay contacts **238** such that current flow from lead **66** through contacts **238** and a lead **240** applies current through relay **136** with return to the D–C common lead **58**, the holding relay **136** then being energized. A parallel branch of lead **240** is applied to the normally-open connection of relay contact **232** and it provides a relay holding energization for relay **136** so that it remains energized after time delay relay **236** drops out of energization. The time delay relay **230** may be a commercially available type of time delay relay which, by selection of elements can be energized to complete its contact circuit for a predetermined period of time. For this application, a period of several seconds is sufficient.

When energized, the holding relay **136** closes the normally-open contacts **242**, **244** and **246**, each of which performs the relay holding function for the respective zone alarm relays **82**, **78** and **74**. Thus, relay contact **246** closes a circuit from D–C lead **38** and contacts **110** (alarm relay **74**) through a lead **134** to a lead **248** and the zone **1** reset switch **104**. The reset switches are normally closed such that the circuit is completed through lead **100** back to relay coil **74** which is connected at its other end to common lead **40**. Similar holding connections are performed by relay contacts **244** and **242** by providing connection between each of leads **250** and **252** to the respective leads **166** and **196** leading to the additional zone relay holding circuits.

OPERATION

The alarm system **10** may be installed in or about a premises or protected area with plural zones divided off in any desired manner. For each zone, the intruder sensor circuits **94** (FIG. 2) are connected in series and this includes any secret, externally disposed enabling switches **224** and interlock-type switches **222** such as are required at main doors and/on other entry points. The fire sensors **102** (see FIG. 2), heat-fusible, normally-open switch units **220**, are connected in parallel throughout a protection zone with two wire connection via leads **96** and **100** back to the control voltage source of the alarm system **10**.

The control circuit **14** is preferably constructed so that a control panel (not shown) can be placed at an accessible location to expose the various control switches and alarm indicator lights. The alarm circuits **12**, as contained on a suitable chassis, may be mounted at the nearby location to lessen the problem of wire interconnections to the control circuit **14**; however, it may be desirable to place alarm circuit **12** in a less accessible, hidden position to further aid in preventing alarm evasion interferences.

The alarm system **10** is normally energized by application of house power via the A–C line input leads **22** through an isolation transformer **24** to provide a reduced voltage A–C between supply leads **28** and **30**. The A–C energization activates relay **34** to open its normally-closed contacts **50** and **52** which hold a standby power source at battery input **54** in readiness should the house power fail. The A–C voltage between leads **30** and **36** is then applied to full-wave rectifier **32** which provides a D–C output operating voltage between common lead **40** and the D–C positive lead **38**. The application of both A–C and D–C power to the system is controlled by main power switches **42** and **62**, respectively, an these may be connected for ganged operation as desired.

The presence of D–C voltage between common lead **40** and the D–C terminal **70** and the lead **38** provides continual energization of the respective relays **72**, **76** and **80** for each of zones **1**, **2** and **3**. For example, the relay **72** is connected from common lead **40** through lead **84** and the test-operate switch **88** for return via lead **92** through the zone **1** intruder sensor circuit **94** to the D–C terminal **70** to complete an energizing circuit. Thus, in normal or quiescent operation of the alarm system, the zone relays **72**, **76** and **80** are continually energized to maintain their respective normally-close contacts **98**, **148** and **178** in an open position. An intrusion or entry disturbance will then open one of the intrusion sensors in respective zone intrusion circuits **94**, **144** or **174** to break the application of D–C power energizing a respective relay **72**, **76** and **80** such that it falls out of conduction to allow a respective one of relay contacts **98**, **148** or **178** to close.

The closure of one of contacts **98**, **148** or **178** initiates alarm activation by applying the D–C voltage from D–C lead **38** through the respective alarm relay **74**, **78** or **82** to close its respective contacts which energize the various alarm functions.

Thus, for the case where zone **1** interference is detected, relay **72** is de-energized closing contacts **98** to energize alarm system **74** which closes respective contacts **106**, **108**, and **110**. Contact **106** then applies D-C voltage through lead **112** to energize the zone **1** alarm indicator lamp **114** at the control circuit **14**. Relay contact **108** provides D-C voltage on lead **116** to the alarm buzzer **118** at control circuit **14** and, in addition, the energized lead **116** may be applied to actuate the remote alarm **120** which is equipped with suitable alerting mechanism. Finally, relay contact **110** applies D-C voltage on lead **134** through the closed contact **246** of holding relay **136** and through the zone reset switch **104** for return via lead **100** to hold the alarm relay **74** in activation. This prevents an intruder from noting his alarm actuation and then reclosing the door or other access opening to shut off the alarm.

The case of fire sensing allows somewhat simplified circuitry due to its more extreme urgency. Thus, the respective fire sensor arrays **102**, **152**, and **182**, for respective zones **1**, **2** and **3**, are connected directly between the D-C power terminal **70** and an input to the respective alarm

relays **74, 78** and **82**. Fire causing fusion of one of the sensors conducts to energize directly its respective alarm relay **74, 78**, or **82** to initiate the various alarm functions. The fire alarm circuitry is carried out by direct actuation of the alarm relays without the necessity or dependence upon zone reset or the relay holding function.

The time delay **230** working in concert with holding relay **136** provides a valuable function in that it provides an automatic reset in the event of temporary power interruption. The time delay relay **230** enables automatic reset, provided zone reset switches **104, 154** and **184** are properly closed, so that holding relay **136** can once again be energized. The delay of relay **230** insures that the relays **72, 76**, and **80** will each be energized first to put the alarm system in its energized quiescent condition without activating the respective alarm relays **74, 78** and **82**. A short time delay is all that is necessary.

Upon activation of an alarm in one of the zones, the respective zone light, buzzer **118**, and so forth will be energized by the respective alarm **76, 78** or **82**. This alarm condition can be terminated by depressing the proper zone reset switch **104, 154** or **184** which breaks the holding circuit and releases the respective alarm relay **74, 78** or **82**. It should be understood that in some cases it may be desirable to gang the operating actuator of zone reset switches **104, 154**, and **184**.

The test-operate switches **88, 140** and **170** allow test of the alarm system at the control circuit **14** to insure that it is in proper operating condition. Thus, the respective switches **88, 140** and **170** can be placed in the "test" position and this will check the continuity of the intrusion sensor circuits through the respective zone as indicated by illumination of the respective alarm indicators **114, 164** and **194**; however, this test actuation will not actuate the buzzer **118** or the remote alarm system **120**. The test procedure is kept from activating the audible alarms by employing a make-before-break type of switch for each of the test-operate switches **88, 140** and **170**. This provides sufficient time delay to prohibit the energization of alarm relays **74, 78** and **82**.

It is contemplated that the alarm system **10** may be especially attractive for use in residences. FIG. 5 discloses additional circuitry and interconnection which may be employed to provide alarm indication at a central or other such location when a resident is absent for an extended period. This centralized connection may take the form of a radio transmission link for transmitting an alarm indication in response to detection of an intrusion or fire disturbance at the alarm system **10**.

The energization for such transmitter equipment may be taken (for example) directly from the remote alarm **120** when activated. Thus, any alarm initiated by the alarm system **10** places D-C energization across common lead **40** and lead **116** to energize the remote alarm relay **122** to close its normally-open contacts **124** and **126**. One or both of the contacts **124** and **126** may be employed to apply power input from leads **128** through leads **260** and **262** to energize a suitable FM transmitter module **264**. The FM transmitter module **264** may be a commercially available type of device which is intended for short range, low power applications. The FM transmitter module **264** can be energized to transmit a suitable RF signal or such via antenna **266** for reception by antenna **268** and application to a suitable detector or receiver at central station **270**. In addition, the central station **270** may provide frequency selective output via lead **272** to a frequency responsive indicator **274** to show plural functions. That is, it is also contemplated that a plurality of residences each identified by a characteristic FM transmission frequency may be interconnected with a single central station **270** such that frequency response to indicator **274** could detect the particular residence registering intrusion or fire and even a particular zone therein which experiences the disturbance.

It should be understood that the invention is by no means limited as to the number, types or array of detector elements which may be employed. For example, various types of smoke sensors or similar specialized detectors may be included in the protection circuitry. It is contemplated too that water detectors of suitable design may be employed to signify disturbance of water as in pools and ponds about the premises.

The foregoing discloses a novel alarm system which is characterized by reliable electrical circuitry embodying various automatic safeguards as to power failure and intruder invasion tactics. The particular design enables a low cost alarm system which can be installed and maintained by the less experienced for whatever his desired surveillance purposes. The device has further capability of being ganged or interconnected into a centralized surveillance system and this too is very flexible due to the use of simple, commercially available transmission links which are easily changed, exchanged and maintained in tuned, working condition. The alarm system is still further characterized by its flexibility, the ability to vary the number and array of fire and intrusion sensor switches within each of a plurality of zones, any of various types of sensor switches being capable of utilization.

Changes may be made in the combination and arrangement of elements as heretofore set forth in the specifications and shown in the drawings; it being understood that changes may be made in the embodiments disclosed without departing from the spirit and scope of the invention as defined in the following claims.

What is claimed is:

1. An intrusion alarm system for detecting entry into a predetermined space having a plurality of access openings, comprising:

a power source;

a plurality of first relay means each having a first relay winding and pairs of normally-closed first contacts;

a plurality of second relay means each having a second relay winding and plural pairs of normally-open second contacts and each being connected so that a respective one of said second relay windings is energized by a respective one of said normally-closed first contacts when a respective first relay means is de-energized;

alarm means connected to be actuated upon energization of one of said second relay means and the closure of one of said plural pairs of normally-open second contacts;

plural zones each including a plurality of first switch means which are actuatable by a disturbance and which are each normally-closed as disposed at an undisturbed access opening, each of said first switch means for each zone being connected in series between said power source and a respective one of said first relay windings to maintain said first relay means continually energized to open said normally-closed first contacts; and

plural zones each including a plurality of second heat sensitive switch means which are each normally-open at room temperatures and which are disposed at predetermined locations throughout the zone, each of said second switch means for each zone being connected in parallel each to the other and being connected between said power source and a respective one of said second relay windings.

2. An intrusion alarm system as set forth in claim **1** wherein said power source comprises:

an A-C voltage source;

third relay means having normally-closed contacts and being connected to be energized by said A-C voltage source;

full-wave rectifier means connected in parallel with said third relay means and providing a power source output;

a D-C voltage source connected to said third relay contacts; and

auxiliary power leads connected between said power source output and said third relay means contacts to conduct current from said D-C voltage source to said power source output when said third relay means is deenergized.

3. An intrusion alarm system as set forth in claim 1 wherein said alarm means comprises:

a plurality of zone alarm indicators;

an alarm buzzer; and

an alarm indicator situated at a remote location.

4. An intrusion alarm system as set forth in claim 3 wherein each of said second relay means comprises:

actuating coil means connected to be energized by a respective one of said first pairs of contacts;

a first pair of normally-open contacts connecting said D-C output to said alarm buzzer means;

a second pair of normally-open contacts connecting said D-C power source to a respective one of the zone alarm indicators; and

a third pair of normally-open contacts providing a holding current output from said D-C power source.

5. An intrusion alarm system as set forth in claim 4 which is further characterized to include:

holding relay means having plural normally-open contacts, each pair of normally-open contacts connecting said holding current output from one of said second relay means third pair of contacts to said D-C power source, said holding relay means being connected to be energized from said power source output.

6. An intrusion alarm system as set forth in claim 5 which is further characterized to include:

time delay relay means energized from said power source output and having a pair of normally-open contacts connected to energize said holding relay means upon delayed closure.

7. An intrusion alarm system as set forth in claim 4 wherein each of said plurality of first switch means comprises:

reed switch means having first and second reed contacts which are maintained closed in the presence of a magnetic field; and

permanent magnet means disposed near said reed switch means to place a magnetic field to close said reed contact means when said access opening is in its normal, undisturbed state.

8. An intrusion alarm system as set forth in claim 6 wherein each of said plurality of first switch means comprises:

reed switch means having first and second reed contacts which are maintained closed in the presence of a magnetic field; and

permanent magnet means disposed near said reed switch means to place a magnetic field to close said reed contact means when said access opening is in its normal, undisturbed state.

9. An intrusion alarm system as set forth in claim 4 wherein each of said plurality of second heat sensitive switch means comprises:

normally open switch means having first and second contacts which react at a temperature greater than a predetermined level to cause a short circuit between said first and second contacts.

10. An intrusion alarm system as set forth in claim 7 wherein each of said second heat sensitive switch means comprises:

normally open switch means having first and second contacts which react at a temperature greater than a predetermined level to cause a short circuit between said first and second contacts.

11. An intrusion alarm system as set forth in claim 1 which is further characterized to include:

frequency modulated transmitter means which transmits a continuous wave output signal of predetermined frequency when energized;

means controlled by actuation of said alarm means to key said frequency modulated transmitter means into energization; and

remote receiver means for receiving said transmitted frequency modulated signal and identifying the predetermined space in accordance with said predetermined frequency.

12. An intrusion alarm system as set forth in claim 7 which is further characterize to include:

frequency modulated transmitter means which transmits a continuous wave output signal of predetermined frequency when energized;

means controlled by actuation of said alarm means to key said frequency modulated transmitter means into energization; and

remote receiver means for receiving said transmitted frequency modulated signal and identifying the predetermined space in accordance with said predetermined frequency.

13. An intrusion alarm system as set forth in claim 1 which is further characterized to include:

a plurality of "test-operate" switch means, each switch means having a first contact connected to make continuity from said power source through one of said pluralities of first switch means when in said "test" position, and having a second contact connected to apply said power source to energize a respective one of said first relay means when in said "test" position.

14. An intrusion alarm system as set forth in claim 13 which is further characterized in that each of that test-operate switch means is a double pole, double throw, make-before-break switch.

15. An intrusion alarm system as set forth in claim 13 which is further characterized in that said "test-operate" switch means in its "operate" position makes continuity from said power source through one of said pluralities of first switch means to energize a respective one of said first relay means.

References Cited

UNITED STATES PATENTS

2,605,342	7/1952	Spurling	340—213 X
2,683,869	7/1954	Norris et al.	
2,701,874	2/1955	Mears	340—276
2,979,706	4/1961	Simon et al.	340—224
3,161,742	12/1964	Bagno	340—274 X
3,200,393	8/1965	Worley	340—420 X
3,234,535	2/1966	Schordine	340—213
3,452,345	6/1969	Kinsey	340—276 X

ALVIN H. WARING, Primary Examiner

P. PALAN, Assistant Examiner

U.S. Cl. X.R.

340—213, 224, 227.1, 276