April 14, 1970 H. H. HEIMBROCK 3,505,720

APPARATUS FOR STRIPPING THE INSULATION FROM A LEAD WIRE AND APPLYING A CONNECTOR THERETO

Filed Feb. 28, 1968 4 Sheets-Sheet 1

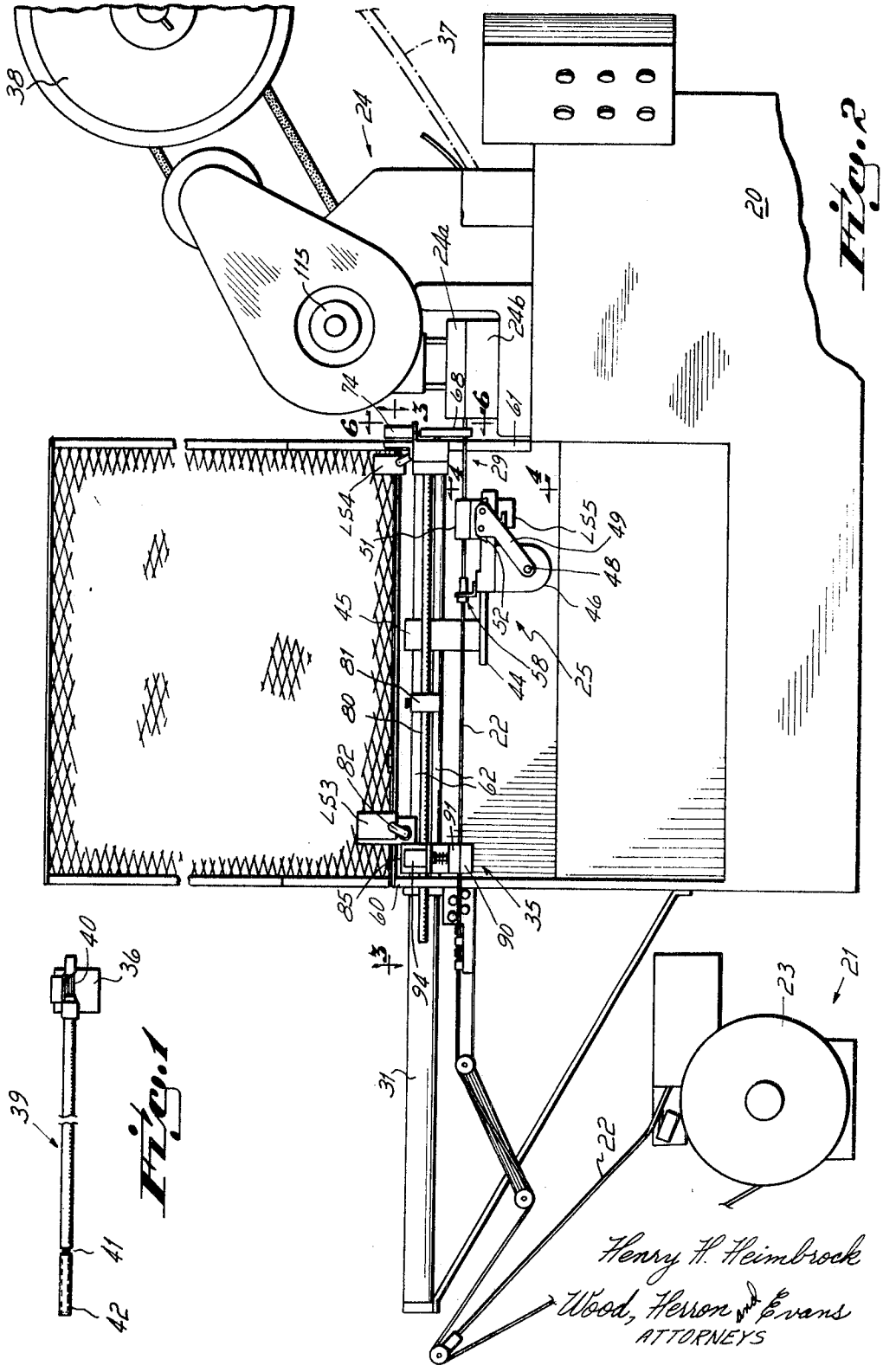

Fig. 2

Fig. 1

Henry H. Heimbrock

Wood, Herron and Evans

ATTORNEYS

April 14, 1970 H. H. HEIMBROCK 3,505,720

APPARATUS FOR STRIPPING THE INSULATION FROM A LEAD WIRE AND APPLYING A CONNECTOR THERETO

Filed Feb. 28, 1968 4 Sheets-Sheet 2

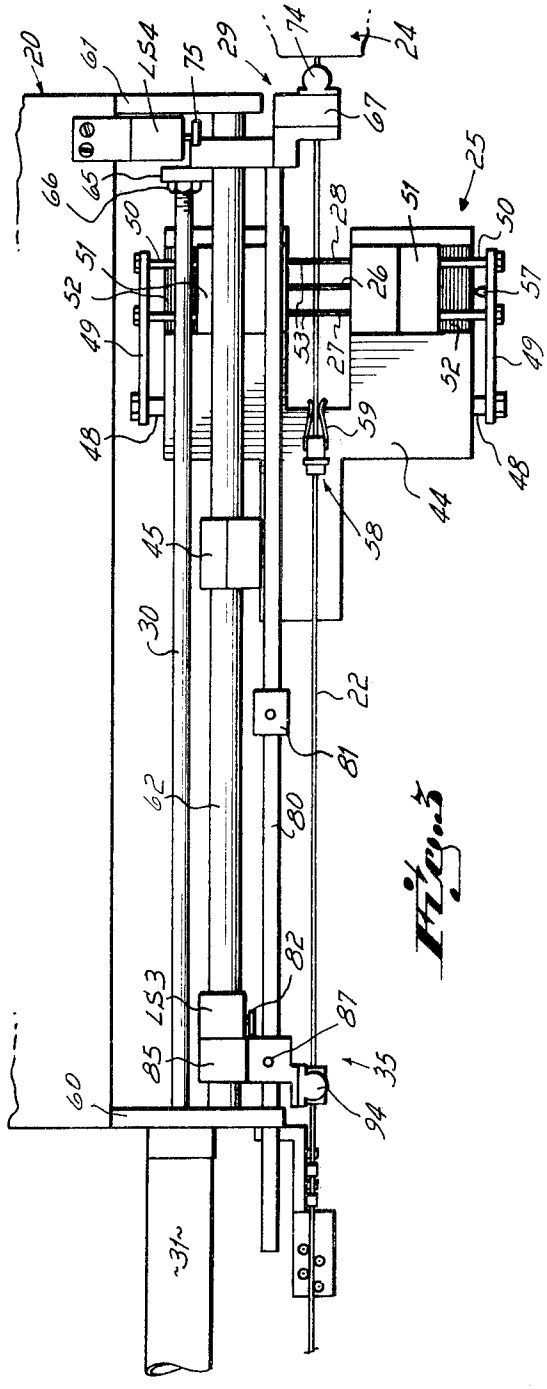

Fig. 3

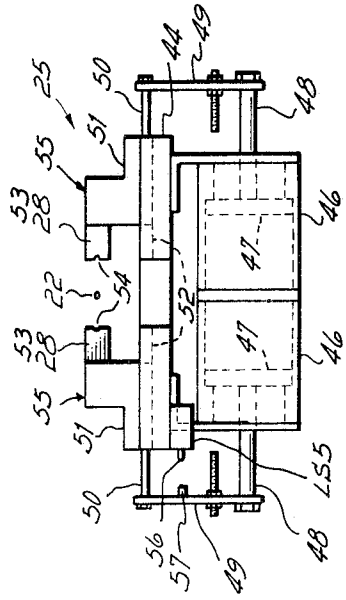

Fig. 5

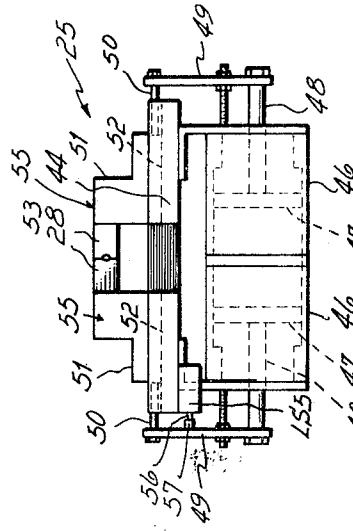

Fig. 4

Henry H. Heimbrock

Wood, Herron & Evans

ATTORNEYS

April 14, 1970 H. H. HEIMBROCK 3,505,720

APPARATUS FOR STRIPPING THE INSULATION FROM A LEAD WIRE AND APPLYING A CONNECTOR THERETO

Filed Feb. 28, 1968 4 Sheets-Sheet 3

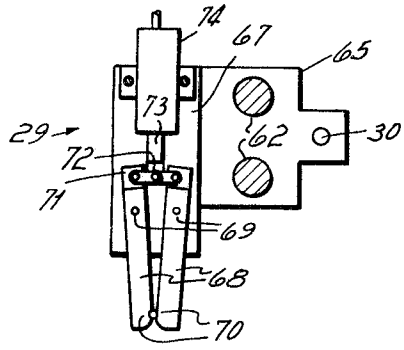

Fig. 6

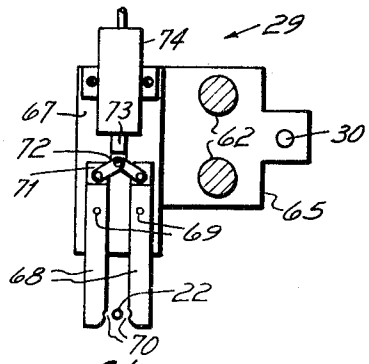

Fig. 7

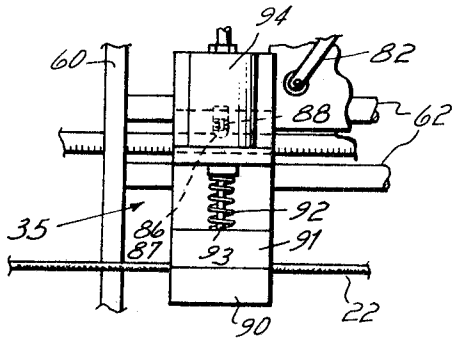

Fig. 8

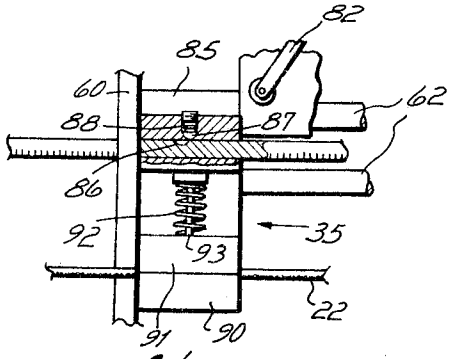

Fig. 9

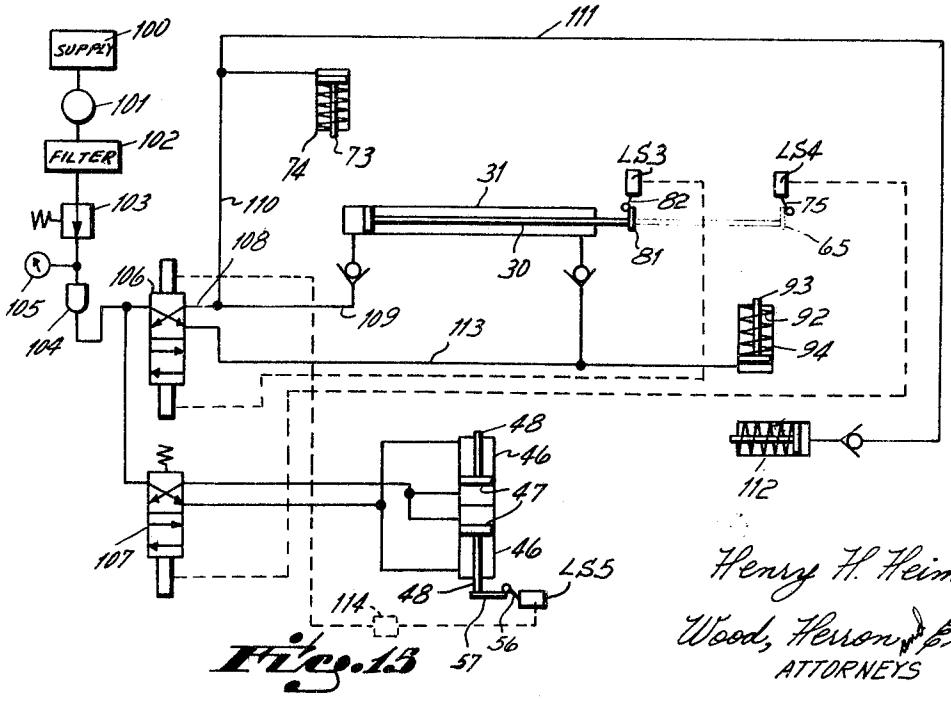

Fig. 13

Henry H. Heimbrock

Wood, Herron & Evans

ATTORNEYS

April 14, 1970 H. H. HEIMBROCK 3,505,720

APPARATUS FOR STRIPPING THE INSULATION FROM A LEAD WIRE AND APPLYING A CONNECTOR THERETO

Filed Feb. 28, 1968 4 Sheets-Sheet 4

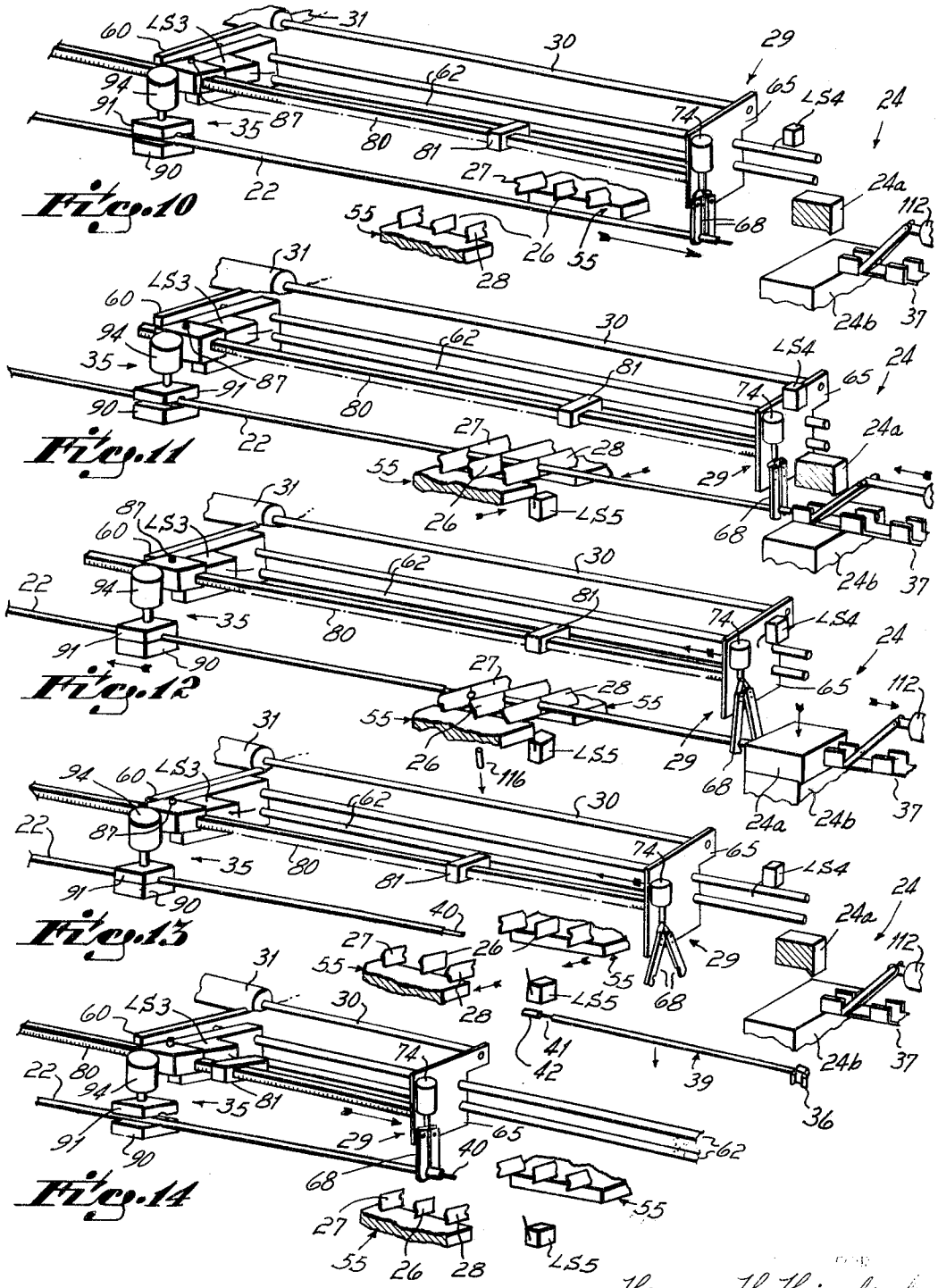

Fig. 10

Fig. 11

Fig. 12

Fig. 13

Fig. 14

Henry H. Heimbrock

BY

Wood, Herron & Evans

ATTORNEYS

United States Patent Office

3,505,720

Patented Apr. 14, 1970

3,505,720

APPARATUS FOR STRIPPING THE INSULATION FROM A LEAD WIRE AND APPLYING A CONNECTOR THERETO

Henry H. Heimbrock, Cincinnati, Ohio, assignor to Van Products, Incorporated, Cincinnati, Ohio, a corporation of Ohio

Filed Feb. 28, 1968, Ser. No. 708,879
Int. Cl. H01r *43/04;* B21f *15/06*
U.S. Cl. 29—203 7 Claims

ABSTRACT OF THE DISCLOSURE

Apparatus for feeding wire from an endless supply to a crimping punch by which an electrical connector is applied to the end of the wire, the apparatus having means intermediate the supply and the crimping punch for cutting the wire and stripping the insulation from that end to which the connector is to be applied.

This invention relates to apparatus for applying an electrical connector to one end of a short lead wire, the other end being prepared so as to adapt it for connection to a motor or the like.

The invention is applicable to the refrigeration industry wherein motors are mounted in hermetically sealed compressors. The motors are connected by lead wires to terminals which form an electrical communication between the inside and outside of the compressor.

A part of the art of making the electrical connection in the compressors involves the cutting of the lead wires, the application of an electrical connector to one end of the lead wire and the connecting of the cut end of the lead wire to the motor. The manner and sequence of performing these steps has been largely dependent upon the production technique of the motor manufacturer who supplies motors to the compressor manufacturers. Perhaps the most common practice is to feed wire from a supply to stripping apparatus where the wire is cut and the insulation is removed from both ends. Its leads thereafter are fed from a hopper to a crimping machine where the connector is applied. Thereafter the leads with the connectors applied are soldered to the motor terminals.

These present practices are subject to several disadvantages. For example, the insulation stripping machines most commonly used employ mechanical cutters to sever the insulation and these cutters cut wire strands as well as the insulation. Further, in the transporting and handling of the cut leads, the insulation would tend to fray making it difficult to work with. Still further, the copper strands fray and are not as easily worked in a crimping machine or in the soldering process by which they are attached to the motors.

An objective of the present invention has been to provide apparatus for combining the stripping and crimping functions so that they are done automatically to minimize the handling required of the lead wires. It is a further objective of the invention to provide for the severing of the insulation by burning and thus eliminating the possibility of cutting copper strands and to minimize the fraying of the insulation.

Still further, in apparatus of the present invention, the insulation is preferably stripped only from that end to which a connector is to be applied. At the opposite end the insulation is severed but the short length of insulation remains on the end of the lead during handling and transporting to the station at which they are applied to the motor. Thus the free ends of the copper strands are prevented from fraying by the jacket of insulative material.

These and other objectives of the invention will be-

come more readily apparent from the following detailed description taken in conjunction with the accompanying drawings in which:

FIG. 1 is an elevational view of a lead wire which has been processed in the apparatus of the present invention;

FIG. 2 is a front elevational view of the apparatus of the present invention;

FIG. 3 is a top plan view thereof taken in the direction of the arrows **3—3** of FIG. 1;

FIG. 4 is a cross sectional view of the heating and cutting jaws taken along lines **4—4** of FIG. 2;

FIG. 5 is a view similar to FIG. 4 showing the jaws open;

FIG. 6 is an elevational view of the wire carrying clamp taken along lines **6—6** of FIG. 2;

FIG. 7 is a view similar to that of FIG. 6 showing the clamps open;

FIG. 8 is an enlarged elevational view of the wire stripper clamp;

FIG. 9 is a view similar to FIG. 8, partly in section, showing the position of the clamp after the wire has been stripped;

FIGS. 10–14 are diagrammatic views in perspective illustrating the sequence of operation of the invention; and

FIG. 15 is a diagrammatic view of the pneumatic controls for the apparatus.

GENERAL ORGANIZATION AND OPERATION

The apparatus of the invention includes a base **20** having structure **21** at one end for supplying wire **22** from a reel **23** to the apparatus. The wire is fed to a crimping punch **24** having dies **24***a* and **24***b* which apply a termination or electrical connector to the free end of the wire. Between the supply **21** and the punch **24** is a cutting and heating assembly **25** consisting of a cutter **26** and heaters **27** and **28** on each side of the cutter **26**.

A carrying clamp **29** is mounted on a piston rod **30** reciprocable in a cylinder **31** to move longitudinally of the apparatus. The piston has a long stroke which permits it to pick up the free end of the wire at a point upstream of the heater **27** and carry it to the crimping punch **24** to receive the application of the connector.

A stripper clamp **35** is mounted at the upstream end of the apparatus and is movable longitudinally with respect to the movement of the piston rod **30** to carry the wire **22** a short distance in the upstream direction while the heaters and cutter are in engagment with the wire. That movement causes a stripping of the severed insulation from the freshly cut end of the wire.

The sequence of operations is generally as follows:

The carrying clamp **29** grasps the free end of the wire at a position adjacent heater **27** and carries it into position with respect to the crimping dies **24***a* and **24***b* in the punch **24**. In this position a connector **36** being fed from a ribbon **37** from a supply **38** is crimped upon the free end of the wire and is severed from the ribbon. Substantially simultaneously with the crimping operation, the wire is cut by the cutters **26** and the insulation is severed by the heaters **27** and **28**. This operation is effected simply by moving the heating and cutting elements toward each other to bring them into engagement with the wire as illustrated in FIG. 3. The heaters burn the insulation while the cutters sever the insulation and the electrical conductor. After the heating and severing operations, and before the jaws of the assembly open, the carrying clamp **29** is opened and begins its upstream movement as carried by the piston rod **30**. In the first portion of that movement, the stripper clamp **35** pulls the wire in an upstream direction and causes the short length of insulation to be slid off the free end of the wire. Thereafter the stripper clamp **35** is blocked from further upstream movement. The

piston rod 30 continues its traverse until the carrier clamp 29 is in a position to grasp a freshly formed free end of the wire and carry it into the crimping punch.

The product of these operations is shown in FIG. 1. As shown there, a short length of lead wire 39 has a connector 36 crimped to the bared end 40. At the opposite end the insulation is burned through as at 41 leaving a jacket 42 of insulation on the end to protect the strands of wire until further connection is to be made.

HEATER AND CUTTER ASSEMBLY

The heater and cutter assembly 25 is mounted on a table 44 which is supported by a post 45 fixed to longitudinal rails 62. The assembly includes a pair of cylinders 46 carrying two pistons 47 which drive rods 48 projecting from opposite ends of the cylinders. The rods 48 carry brackets 49 which are connected by elongated bolts 50 at their upper ends to blocks 51. The blocks 51 are slideable toward each other in ways 52 formed in the surface of the table 44. Each block carries a cutter 26 and two heaters 27 and 28 disposed on either side of the cutter. The combination of blocks, cutters and heaters will be referred to as the assembly jaws 55. The heaters 27 and 28 are formed of a conductive metal strip 53 having a notch 54 to receive the wire. The strip is connected to electrical conductors which continuously supply it with sufficient current to raise its temperature to that level required for the rapid burning or melting of the insulation surrounding the wire. A limit switch LS–5 is carried by the table 44 and has an actuator 56 engageable by an abutment 57 on one bracket 49 carried by a piston rod 48. The closing of the assembly jaws 55 causes the operation of the limit switch which in turn initiates other operations of the apparatus as will be explained below.

WIRE FEEDING APPARATUS

The motive power for the wire feeding apparatus is derived from the elongated piston rod 30 and its cylinder 31. As indicated, the rod carries the carrying clamp 29 by which the wire is gripped and fed into position with respect to the jaws 55 and the crimping punch 24. A wire guide 58 is mounted on the table 44 and has leaf spring fingers 59 which frictionally engage the wire 22 to maintain it in position to be grasped by the carrying clamp, to be described below. The mechanism by which the wire is transported is supported by two vertical plates 60 and 61. Vertically spaced tubular rails 62—62 are mounted between the plates 60 and 61 and provide supports upon which the carrying clamp 29 slides. The carrying clamp 29 includes a bracket 65 slideably mounted on the rails 62. The barcket 65 is secured to the end of the piston rod 30 by the rods being threaded into the bracket and fixed in position by a lock nut 66. The bracket 65 carries a block 67 to which clamping jaws 68 are pivotally mounted as at 69 (FIGS. 6–7). The lower ends of the clamping jaws have notches 70 to grasp a wire therebetween. The upper ends of the jaws are pivotally connected to a toggle linkage 71, the center 72 of which is connected to a piston rod 73 slideable in cylinder 74. The cylinder 74 is a single acting spring return cylinder which is actuated by the control system as will be explained below to effect the movement of the jaws from a clamping attitude as shown in FIG. 6 to a release attitude as shown in FIG. 7. The spring normally urges the jaws to the open or release position of FIG. 7, the jaws being closed by the application of a pneumatic or hydraulic pressure.

A limit switch LS–4 is mounted on the base 20 and has an actuator 75 which is engageable by the bracket 65 when the bracket 65 is driven to the extreme end of its movement toward the crimping punch. The limit switch operates a part of the control system as will be described below.

A positioning rack 80 is fixed at one end to the bracket 65 and is slideable at its other end in the plate 60. A position block 81 is fixed to the positioning rack 80 intermediate its ends and is longitudinally adjustable with respect to the rack in order to fix the length of the stroke of the piston rod 30. The block 81 is engageable with an actuator 82 on a limit switch LS–3 mounted at the upstream end of the base 20. The limit switch LS–3 controls the actuation of carrying clamp 29 and of the cylinder 31 and its rod 30 so that engagement of the actuator 82 causes jaws 68 to clamp the wire and causes a reversal of movement of the rod 30. Thus the length of stroke of the rod 30 and hence the length of the lead wire can be varied by varying the position of the block 81 on the rack 80.

The striper clamp 35 includes a mounting block 85 which is slideably mounted on the rails 62. The block 85 carries the limit switch LS–3. The positioning rack 80 passes through the mounting block as best illustrated in FIGS. 8 and 9. The rack has a recess 86 in its upper surface which is engageable by a pin 87 which is urged by a spring 88 into the recess. As the rack 80 moves toward the left as viewed in the drawings the engagement of the recess by the pin carries the mounting block 85 toward the left until it engages the plate 60. Thereafter the recess 86 passes underneath the pin and the rack continues its leftward travel. This short increment of movement of the block 85 permits the stripper clamp 35 to pull the wire in a leftward or upstream direction while the jaws 55 on the heater-cutter assembly are still closed. Thus the insulation which has been served by the heaters 27 is slid off the freshly severed end of the wire.

To be pulled leftward, the wire 22 is clamped between a fixed jaw 90 and an upper moveable jaw 91. The moveable jaw is spring urged into a clamping position by compression spring 92 and is adapted to be moved upwardly by a rod 93 connected to a piston within a single acting cylinder 94.

CONTROL SYSTEM

The pneumatic control system is diagrammatically illustrated in FIG. 15 and includes a supply of air 100 under pressure feeding through a main valve 101, a filter 102, a regulator 103, a lubricator 104, and has a gauge 105 for monitoring the pressure. The air supply is connected to a double solenoid actuated four-way valve 106. The supply is also connected to a four-way single solenoid actuated spring valve 107. The valve 107 is simply connected to the cylinders 46 of the heater and cutter assembly.

The valve 106 when in one of its positions connects the air supply, via a line 108 and associated distribution lines 109, 110, and 111, to one side of the double acting main cylinder 31, to the wire clamp cylinder 74, and to a cylinder 112 which feeds the terminals 36 into the crimping dies. When in the other opposite position, the valve 106 connects the air supply by a line 113 to the opposite side of the double acting cylinder 31 and to the stripper cylinder 94.

The solenoid for valve 107 is operated by limit switch LS–4 so that when limit switch LS–4 is engaged by the carrying clamp at the end of the stroke of rod 30, the solenoid is energized and the valve is operated to cause air to enter the remote ends of the cylinders 46 to drive the pistons and hence the jaws 55 together. When the limit switch is disengaged, the spring return will cause the valve to return to its original position shifting the air pressure from the remote ends of the cylinders to the adjacent ends of the cylinders thereby driving the pistons and jaws apart. The closing of the jaws 55 causes the operation or closing of limit switch LS–5. When limit switch LS–5 is closed, a timer 114 is energized and a solenoid operated valve connected to a clutch 115 on the crimping punch is operated causing the crimping punch to apply a connector 36 to the end of wire 22. The timer is connected to the main cylinder 31 by way of the four-way valve 106. After a preselected interval suitable for the burning through of the insulation the timer causes the reversal of

the valve **106** thereby reversing the flow of air through the cylinder **31** and causing the piston rod **30** to retract. When the piston rod **30** has fully retracted, it engages limit switch LS–3 which opens the circuit to the retracting solenoid on valve **106** and closes the circuit to the forward solenoid on valve **106** so that the movement of the piston rod **30** is immediately reversed. During the retraction of the cylinder **30** air is fed to the stripper cylinder **94** to cause the jaws **90–91** to engage the wire.

When the valve **106** is reversed and air pressure is fed to the opposite end of the cylinder **31** to cause the piston rod **30** to move forward air is also fed to the wire clamp cylinder **74** to cause the jaws **68** to grip the wire in order to carry it forward to the crimping punch.

The air to retract the main cylinder rod **30** is applied simultaneously to the stripper cylinder **94** so that the stripper cylinder **94** will clamp the wire as the rod begins its retraction stroke so as to permit the stripping of the insulation from the cut end of the wire.

The valve **106** is maintained in the forward position thereby maintaining the supply of air in the line **108** to the glides **112** for feeding a new terminal into the crimping dies from the ribbon **37.**

OPERATION

Referring to FIGS. 10–14, the apparatus as illustrated in FIG. 10 shows the wire having been grasped at its free ends by the carrying clamp **29** and in the process of being carried into position between the crimping dies **24***a* and **24***b* of the punch **24.** When the apparatus is in this condition, the valve **106** has been shifted to the position by which the line **108** is connected to the air supply so that the rod **30** is driven toward the right, the wire clamp cylinder has been actuated to close the jaws **68** upon the end of the wire, and a new terminal **36** is being fed into the crimping dies from the ribbon **37.**

As shown in FIG. 11, at the end of the stroke of the rod **30**, limit switch LS–4 is contacted, the rod **30** having reached the end of its stroke and can move no further. The limit switch LS–4 closes the circuit to the solenoid which operates the valve **107** to connect the cylinders **46** to the air supply to drive the cutting and heating jaws **55** together. The heating jaws are maintained in a heated condition and on contact with the insulation either burn it through in the case of cotton, for example, or melt it in the case of a thermoplastic insulation. Simultaneously, the wire is severed intermediate the jaws **27** and **28** by the cutters **26.**

At the inward end of the stroke of the jaws **55**, limit switch LS–5 is engaged and closes a circuit to a solenoid associated with the punch **24.** The solenoid causes the operation of the clutch **115** on the punch **24** which drives the crimping dies together,

The limit switch LS–5 also closes a circuit to the timer **114.** The timer operates the four-way valve **106** after a preselected dwell which is of a sufficient length of time to permit the burning of the insulation and operation of the crimping punch **24.**

When the timer operates the valve **106**, the air to the clamping cylinder **74** and the punch feed cylinder **112** is relieved and the springs associated with those cylinders return them to their original position. Reversal of the position of the valve **106** shifts the air pressure to line **113** thereby causing the operation of the stripper cylinder **94** and a reversal of the direction of movement of the rod **30.** As the rod **30** begins its return movement, to the left as viewed in FIG. 12, it carries positioning rack **80** with it. In the initial portion of that movement the recess **86** in the positioning rack **80** is in engagement with the pin **87** so that movement of the rack carries the block **85** and stripper clamps **35** to the left. The leftward movement of the stripper clamps pulls the wire with respect to the heaters **27** and causes the insulative jacket to slide off from the freshly cut end as indicated at **116.** Block **85** and stripper jaws move only a short distance until block **85** engages plate **60.** Thereafter the positioning rack **80** slides with respect to the block **85**, the recess riding out from under pin **87.**

Also during the initial portion of the leftward movement of the rod **30** limit switch LS–4 is disengaged. The limit switch LS–4 had been holding in the valve **107** and opening the limit switch LS–4 permits the spring associated with the valve to return it to its normal position thereby shifting the air pressure and reversing the movement of the jaws **55** of the heating and cutting assembly.

Leftward movement of the rod **30** continues as illustrated in FIG. 13. During this movement the carrying clamps pass through the now opened jaws **55**, the crimping dies open up through the continued movement of the punch so that the lead wire **39** with its connector attached drops into a hopper or the like.

When the rod **30** reaches the end of its stroke, as determined by the engagement of the positioning block **81** with the limit switch LS–3, the valve **106** is actuated and the cycle described above is repeated.

I claim:

1. Apparatus for stripping insulation from a wire and applying an electrical connector thereto comprising:
- a base,
- a supply of wire at one end of said base,
- a crimping punch at the other end of said base for applying said connector,
- a cutting and heating assembly between said wire supply and said punch, said assembly having two spaced heaters for severing insulation and a cutter between said heaters for severing said wire,
- a wire carrying clamp reciprocable between a position adjacent said punch and a position adjacent said assembly, and
- means for reciprocating said clamp between said two positions to pick up a free end of said wire from said supply and carry it to said punch to receive a connector.

2. Apparatus according to claim **1** in which said reciprocating means comprises:
- an elongated cylinder mounted on said base adjacent said supply and a piston and rod reciprocable in said cylinder, and
- means mounting said wire clamp on the end of said rod.

3. Apparatus according to claim **2** in which said wire clamp comprises a pair of jaws mounted for engagement with respect to a wire,
- pneumatic means mounted on said piston rod for opening and closing said jaws.

4. Apparatus according to claim **1** further comprising:
- a stripper clamp mounted on said base adjacent said wire supply,
- said stripper clamp being reciprocable a distance approximately equal to the distance between said cutter and adjacent heater,
- said stripper clamp having jaws engageable with said wire,
- means for clamping said jaws about said wire after said wire has been advanced to said punch, and
- means for moving said stripper clamp away from said assembly after severing said insulation and wire thereby stripping the insulation from the free end of the freshly cut wire.

5. Apparatus according to claim **1** further comprising:
- means mounted on said base and actuated by said reciprocating means for stripping the insulation from the free end of said wire.

6. Apparatus according to claim **1** further comprising:
- a longitudinally adjustable abutment carried by said reciprocating means,
- a substantially fixed limit switch engageable by said abutment,
- means connecting said limit switch to said reciprocating means to reverse the direction of said reciprocating means when said wire carrying clamp is in a position

adjacent said assembly, said adjustable abutment thereby permitting an adjustment of the length of resultant cut wire.

7. Apparatus according to claim 1 further comprising:

a positioning rack carried by said reciprocating means, a stripper clamp slidably mounted on said reciprocating means, resilient detent and recess carried respectively by said stripper clamp and positioning rack, and

a stop on said base engageable by said stripper clamp after a first portion of the movement of said reciprocating means from said position adjacent said punch to said position adjacent said assembly to block movement of said stripper clamp.

References Cited

UNITED STATES PATENTS

3,199,383	8/1965	Gudmestad	81—9.51
3,239,924	3/1966	Wagner	29—203
3,267,556	8/1966	Scharf	29—203 X
3,363,309	1/1968	Logan et al.	29—203 X
3,376,627	4/1968	Sitz	29—203

THOMAS H. EAGER, Primary Examiner

U.S. Cl. X.R.

81—9.51