(12) INTERNATIONAL APPLICATION PUBLISHED UNDER THE PATENT COOPERATION TREATY (PCT)

(19) World Intellectual Property Organization
International Bureau

(43) International Publication Date
27 April 2023 (27.04.2023)

WIPO | PCT

(10) International Publication Number
WO 2023/069092 A1

(51) International Patent Classification:
A61B 5/15 (2006.01)

(21) International Application Number:
PCT/US2021/055870

(22) International Filing Date:
20 October 2021 (20.10.2021)

(25) Filing Language: English

(26) Publication Language: English

(71) Applicant: **THE MONARCH COMPANY** [US/US]; 4000 Eagle Point Corporate Drive, Birmingham, Alabama 35242 (US).

(72) Inventors: **TRAWICK, Jonathan**; 2016 Knollwood Place, Birmingham, Alabama 35242 (US). **SEMMANN, Clint**; 37472 Clear Lake Drive, Waseca, Minnesota 56093 (US). **PRICE, James**; 1012 Wesley Trace, Birmingham, Alabama 35242 (US).

(74) Agent: **FRONEK, Todd**; 8300 Norman Center Drive, Suite 1000, Minneapolis, Minnesota 55437 (US).

(81) Designated States *(unless otherwise indicated, for every kind of national protection available)*: AE, AG, AL, AM, AO, AT, AU, AZ, BA, BB, BG, BH, BN, BR, BW, BY, BZ, CA, CH, CL, CN, CO, CR, CU, CZ, DE, DJ, DK, DM, DO, DZ, EC, EE, EG, ES, FI, GB, GD, GE, GH, GM, GT, HN, HR, HU, ID, IL, IN, IR, IS, IT, JO, JP, KE, KG, KH, KN, KP, KR, KW, KZ, LA, LC, LK, LR, LS, LU, LY, MA, MD, ME, MG, MK, MN, MW, MX, MY, MZ, NA, NG, NI, NO, NZ, OM, PA, PE, PG, PH, PL, PT, QA, RO, RS, RU, RW, SA, SC, SD, SE, SG, SK, SL, ST, SV, SY, TH, TJ, TM, TN, TR, TT, TZ, UA, UG, US, UZ, VC, VN, WS, ZA, ZM, ZW.

(84) Designated States *(unless otherwise indicated, for every kind of regional protection available)*: ARIPO (BW, GH, GM, KE, LR, LS, MW, MZ, NA, RW, SD, SL, ST, SZ, TZ, UG, ZM, ZW), Eurasian (AM, AZ, BY, KG, KZ, RU, TJ, TM), European (AL, AT, BE, BG, CH, CY, CZ, DE, DK, EE, ES, FI, FR, GB, GR, HR, HU, IE, IS, IT, LT, LU, LV, MC, MK, MT, NL, NO, PL, PT, RO, RS, SE, SI, SK, SM, TR), OAPI (BF, BJ, CF, CG, CI, CM, GA, GN, GQ, GW, KM, ML, MR, NE, SN, TD, TG).

(54) Title: BLOOD COLLECTION ASSEMBLY

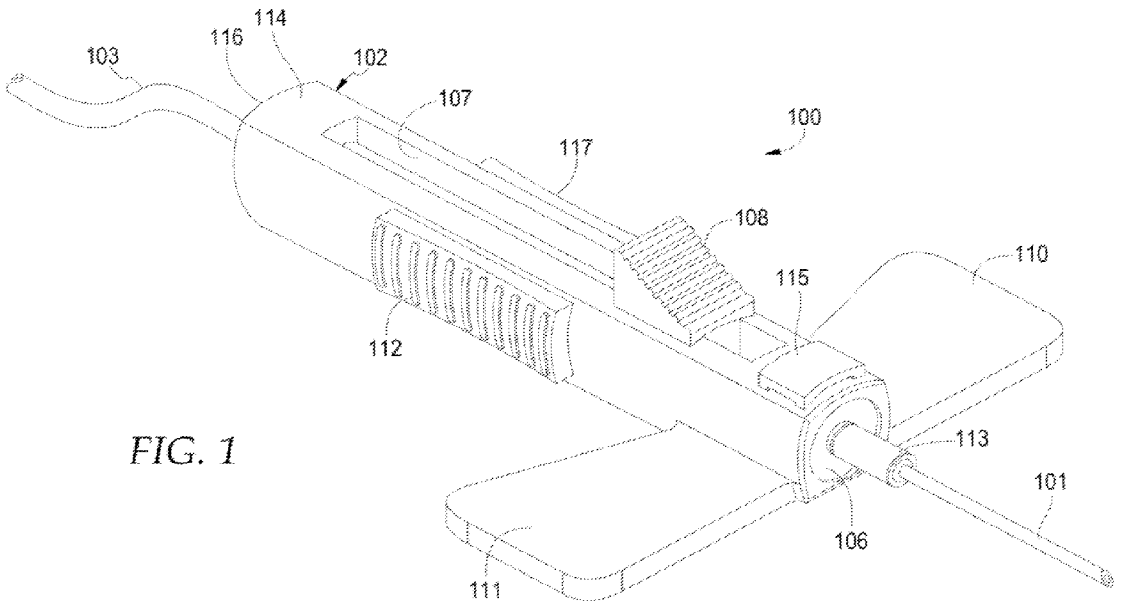

FIG. 1

(57) Abstract: A blood collection assembly has a needle assembly fixedly coupled to a finger-activated actuator and tubing and the needle assembly has a needle. Further, the blood collection assembly has a hub that houses the needle assembly and the hub has a channel in a top surface of the hub. Additionally, the channel slidably engages the finger-activated actuator such that when the finger-activated actuator is moved from a distal end of the hub to a proximal end of the hub the needle retracts within the hub.

WO 2023/069092 A1

[Continued on next page]

Published:
— *with international search report (Art. 21(3))*

BLOOD COLLECTION ASSEMBLY

BACKGROUND

[0001] Blood collection assemblies often comprise a small diameter needle having a pointed distal end and a proximal end mounted to a hub. Sometimes, the hub has wings mounted on either side. These wings may be used for a number of things. As an example, the wings may stabilize the blood collection assembly as the needle is inserted into a patient's arm.

[0002] Some blood collection assemblies have safety devices that protect users and patients from the needle after the needle has been used. For example, one blood collection assembly comprises a button that when selected actuates a spring drawing the needle into the hub. Another blood collection assembly comprises actuating wings, such that when the wings are rotated upward and together, a spring is initiated that retracts the needle. There are other types of safety devices on other blood collection assemblies.

[0003] Many of the existing safety devices are not put in place until the needle is removed from the person's arm. Thus, many existing safety devices still leave the needle exposed momentarily. This momentary exposure can lead to an accidental needle stick.

SUMMARY

[0004] A blood collection assembly has a needle assembly fixedly coupled to a finger-activated actuator and tubing and the needle assembly has a needle. Further, the blood collection assembly has a hub that houses the needle assembly and the hub has a channel in a top surface of the hub. Additionally, the channel slidably engages the finger-activated actuator such that when the finger-activated actuator is moved from a distal end of the hub to a proximal end of the hub the needle retracts within the hub.

BRIEF DESCRIPTION OF THE DRAWINGS

[0005] The present disclosure can be better understood with reference to the following drawings. The elements of the drawings are not necessarily to scale relative to each other, emphasis instead being placed upon clearly illustrating the principles of the disclosure. Furthermore, like reference numerals designate corresponding parts throughout the several views.

[0006] FIG. 1 is a perspective view of an exemplary blood collection assembly in accordance with an embodiment of the present disclosure with a needle advanced.

[0007] FIG. 2 is a top cross-sectional view of the blood collection assembly with the needle advanced as shown in FIG. 1.

[0008] FIG. 3 is a side elevational view of the blood collection assembly with the needle advanced as shown in FIG. 1.

[0009] FIG. 4 is an end elevational view of the blood collection assembly with the needle advanced as shown in FIG. 1.

[0010] FIG. 5 is a perspective view of the blood collection assembly of FIG. 1 with the needle retracted.

[0011] FIG. 6 is a top cross-sectional view of the blood collection assembly as shown in FIG. 1 with the needle retracted.

[0012] FIG. 7 is a side elevational view of the blood collection assembly as shown in FIG. 1 with the needle retracted.

[0013] FIG. 8 is an end elevational view of the blood collection assembly as shown in FIG. 1 with the needle retracted.

[0014] FIG. 9 is a perspective view of another embodiment of a blood collection assembly with a needle advanced.

[0015] FIG. 10 is a partially exploded perspective view of the blood collection assembly as shown in FIG. 9.

[0016] FIG. 11 is a top plan view of a hub of the blood collection assembly as shown in FIG. 9.

[0017] FIG. 12 is a cross-sectional view of the hub as shown in FIG. 11.

[0018] FIG. 13 is a cross-sectional view of the blood collection assembly as shown in FIG. 9 with a needle in an advanced position.

[0019] FIG. 14 is a cross-sectional view of the blood collection assembly as shown in FIG. 9 with a needle in the retracted position.

DESCRIPTION

[0020] The present disclosure describes an exemplary blood collection assembly. The exemplary blood collection assembly comprises a hub that contains a needle assembly. In one embodiment, the hub comprises a set of wings that are used to balance the blood collection assembly as a needle is injected into a patient's arm.

[0021] Within a top side of the hub is a channel. Slidably coupled to the channel is a finger-activated actuator. The finger-activated actuator is situated toward the distal end of the hub when the needle is in an advanced position, such as when the needle is inserted into the patient's arm. When it is time to remove the needle from the patient's arm, a user slides the finger-activated actuator toward the proximal end of the hub until the needle is completely within the hub. Thus, the needle is removed from the patient's arm with little risk of accidental sticks.

[0022] In addition, at the distal end of the hub situated above the needle when the needle is in the advanced position is a compressed cotton and plastic shield. The compressed cotton and plastic shield is inside a compartment that is situated on a top side of the hub. When the needle is retracted by the finger-activated actuator, the compressed cotton and plastic shield falls down between the distal end of the needle and the needle opening in the hub. The cotton absorbs any excess liquid or blood and the plastic protects users from the distal end of the needle ensuring that the needle does not advance.

[0023] FIG. 1 is a perspective view of a blood collection assembly 100 in accordance with an embodiment of the present disclosure when a needle 101 is in an advanced position. An "advanced position" indicates that the needle is protruding for insertion into a patient's arm (not shown). The needle 101 protrudes from a plastic lid receptacle 113 to which a safety plastic lid (not shown) is coupled before use of the blood collection assembly 100.

[0024] The blood collection assembly 100 comprises a hub 102, a needle 101, and flexible tubing 103. In one embodiment, the flexible tubing 103 may comprise a clamp (not shown) for clamping the flexible tubing 103 to prohibit blood from fluidically travelling through the tubing. In use, the

needle 101 is inserted in the patient's arm, blood flows through a needle assembly (not shown) that is coupled to the flexible tubing 103, and the blood flows through the flexible tubing 103 to a reservoir (not shown).

[0025] The blood collection assembly 100 further comprises a substantially cuboidal-shaped channel 107 formed in a top surface 114 of the hub 102. The substantially cuboidal-shaped channel 107 runs rectilinearly from a distal end 106 to a proximal end 116 of the hub 102. Slidably engaged with the cuboidal-shaped channel 107 is a finger-activated actuator 108, and the finger-activated actuator 108 is fixedly coupled to the needle assembly within the hub 102, which is described further herein.

[0026] In operation, a user inserts the needle 101 in a patient's arm. Blood is collected via the flexible tubing 103 in the reservoir. After the blood is collected, the user places his/her finger on the finger-activated actuator 108 and pulls the finger-activated actuator 108 to the proximal end 116 of the hub 102. Once the finger-activated actuator 108 has been moved to the proximal end 116 of the hub 102, the needle 101 is completely inside the hub 102. Thus, the needle 101 does not pose an accidental stick risk.

[0027] The blood collection assembly 100 further comprises wings 110 and 111. The wings 110 and 111 are coupled to and extend laterally from the distal end 106 of the hub 102. The wings 110 and 111 stabilize the blood collection assembly 100 while the needle 101 is inserted into the patient's arm. Further, the wings 110 and 111 stabilize the blood collection assembly 100 post insertion while blood is being drawn. Additionally, the wings 110 and 111 stabilize the assembly 100 when the finger-activated actuator 108 is actuated.

[0028] The blood collection assembly 100 further comprises a compartment 115. The compartment 115 houses a compressed cotton and plastic shield (not shown) that is housed in the hub 102. While the needle 101 is in the advanced position, the compressed cotton and plastic shield rests above the needle 101. However, when the needle 101 is moved to a retracted position via the finger-activated actuator 108, the compressed cotton and plastic shield falls between the distal end of the needle 101 and the plastic lid receptacle 113 inside the hub 102. The compressed cotton absorbs any fluid or blood that might leak from the needle 101 and the plastic shields the needle 101 from advancing through the plastic lid receptacle 113.

[0029] The blood collection assembly 100 further comprises gripper pads 112 and 117. The gripper pads 112 and 117 are coupled to or integral with the sides of the hub 102. The gripper pads 112 and 117 enable the user to easily grip the blood collection assembly 100 while in use. In this regard, the gripper pads 112 and 117 allow the user to easily grasp the blood collection assembly 100 when the user is collecting blood from the patient's arm or when the user is actuating the finger-activated actuator 108 to retract the needle 101.

[0030] FIG. 2 is a top cross-sectional view of the blood collection assembly 100 when the needle 101 is in the advanced position for insertion into a patient's arm. Note that prior to use of the blood collection assembly 100, a plastic lid (not shown) is coupled to the plastic lid receptacle 113 on the distal end of the hub 102 to protect from accidental sticks. In FIG. 2, the plastic lid is shown removed from the blood collection assembly 100, and the needle is exposed.

[0031] Note that the gripper pads 112 and 117 are shown coupled to or integral with the sides of the hub 102. As described hereinabove, the gripper pads 112 and 117 enable the user to easily grip the blood collection assembly 100 while in use.

[0032] Further note that the wings 110 and 111 are shown coupled to the distal end 106 of the hub 102. As described hereinabove, the wings 110 and 111 stabilize the blood collection assembly 100 while in use.

[0033] The blood collection assembly 100 further comprises a needle assembly 200. The needle assembly is moveably contained within a chamber 211 of the hub 102. The needle assembly 200 comprises a tubular member 204. The tubular member 204 comprises a cylindrical channel 204 defined by an inner wall 205. The needle assembly 200 is fixedly coupled to the needle 101 and the tubing 103 (FIG. 1). Additionally, the finger-activated actuator 108 is fixedly coupled to the needle assembly 200 such that when the finger-activated actuator 108 is moved from the distal end 106 to the proximal end 116 of the hub 102, the needle assembly 200 moves with the finger-activated actuator 108 from the distal end 106 to the proximal end 116 of the hub 102.

[0034] The needle assembly 200 further comprises a substantially rectangular-shaped protrusion 202. In operation, when the needle assembly 200 is moved via the finger-activated actuator 108 to the proximal end 116 of the hub 102, the rectangular-shaped protrusion 202 rests within a

substantially rectangular-shaped indentation 201 in an inside surface 210 of the hub 102. In this regard, the rectangular-shaped protrusion 202 locks into the rectangular-shaped indentation 201 thereby fixing the needle assembly 200 at the proximal end of the hub 102. Thus, the needle assembly 200, including the needle 101, can no longer move toward the distal end 106 of the hub 102. Therefore, users are protected from the needle 101 when the needle assembly 200 is in the retracted position, which is shown with reference to FIG. 6.

[0035] FIG. 3 is a side elevational view of the blood collection assembly 100 when the needle is in the advanced position. In this regard, the needle assembly 200 comprises the tubular member 204. The tubular member 204 comprises the cylindrical channel 204 defined by the inner wall 205. The needle assembly 200 comprises the needle 101 that is fixedly coupled to the tubular member 204. Additionally, the finger-activated actuator 108 is fixedly coupled to the needle assembly 200 such that when the finger-activated actuator 108 is moved from the distal end 106 to the proximal end 116 of the hub 102, the needle assembly 200 moves with the finger-activated actuator 108 to the proximal end 116 of the hub 102.

[0036] The blood collection assembly 100 further comprises a compressed cotton and plastic shield 301. The compressed cotton and plastic shield 301 is situated in the compartment 115 above the needle assembly 200 when the needle assembly 200 is in the advanced position. Note that as will be shown further herein, when the needle assembly 200 is retracted by the finger-activated actuator 108, the compressed cotton and plastic shield 301 falls downward resting between the distal end of the needle 101 and the receptacle 113. The compressed cotton of the shield 301 absorbs any excess liquid or blood from the needle 101, and the plastic portion of the shield 301 safely ensures that the needle 101 does not advance outwardly through the receptacle 113.

[0037] The blood collection assembly 100 further comprises an angled bottom surface 302. In one embodiment, the surface 302 is angled at an acute angle θ. When the blood collection assembly 100 is in use, the angled bottom surface 302 rests on the patient's arm thereby allowing the needle 101 to be more easily inserted. Further, the angle bottom surface 302 levels the blood collection assembly 100 so that when the finger-activated actuator 108 is moved by the user, the blood collection assembly 100 remains stabilized.

[0038] FIG. 4 is an end elevational view of the blood collection assembly 100 when the needle assembly 200 is in the advanced position and the needle 101 protrudes from the receptacle 113. Further, wings 110 and 111 protrude laterally from the hub 102 for stabilization of the blood collection assembly 100.

[0039] The blood collection assembly 100 comprises the compartment 115 that protrudes from an upper surface 400 of the hub 102. While the needle assembly 200 is in the advanced position, the compressed cotton and plastic shield 301 is situated within the compartment 115 above the needle 101. As will be shown further herein, when the needle assembly 200 is retracted, the compressed cotton and plastic shield 301 falls downward and rests between the distal end of the needle 101 and the receptacle 113.

[0040] FIG. 5 is a perspective view of the blood collection assembly 100 in accordance with an embodiment of the present disclosure when the needle 101 is in a retracted position. A "retracted position" indicates that the needle has been moved from the patient's arm and is housed within the hub 102. In this regard, the needle 101 no longer protrudes from the plastic lid receptacle 113.

[0041] As described hereinabove, the blood collection assembly 100 further comprises the substantially cuboidal-shaped channel 107 formed in the top surface 114 of the hub 102. The substantially cuboidal-shaped channel 107 runs rectilinearly from the distal end 106 to a proximal end 116 of the hub 102. Slidably engaged with the cuboidal-shaped channel 107 is the finger-activated actuator 108, and the finger-activated actuator 108 is fixedly coupled to the needle assembly 200 (FIG. 2) within the hub 102.

[0042] In operation, a user inserts the needle 101 in a patient's arm. Blood is collected via the flexible tubing 103 in the reservoir. After the blood is collected, the user places his/her finger on the finger-activated actuator 108 and pulls the finger-activated actuator 108 to the proximal end 116 of the hub 102. Once the finger-activated actuator 108 has been moved to the proximal end 116 of the hub 102, the needle 101 is completely inside the hub 102. Thus, the needle 101 no longer poses an accidental stick risk.

[0043] The blood collection assembly 100 further comprises the wings 110 and 111. As described hereinabove, the wings 110 and 111 are coupled to and extend laterally from the distal end 106 of

the hub 102. The wings 110 and 111 stabilize the blood collection assembly 100 while the needle 101 is inserted into the patient's arm. Further, the wings 110 and 111 stabilize the blood collection assembly 100 post insertion while blood is being drawn.

[0044] The blood collection assembly 100 further comprises the compartment 115. The compartment 115 houses the compressed cotton and plastic shield 301 (FIG. 3) that is housed in the hub 102. While the needle 101 is in the advanced position, the compressed cotton and plastic shield 301 rests above the needle 101. However, when the needle 101 is moved to the retracted position via the finger-activated actuator 108, the compressed cotton and plastic shield 301 falls downwardly between the distal end of the needle 101 and the plastic lid receptacle 113 inside the hub 102. The compressed cotton absorbs any fluid or blood that might leak from the needle 101, and the plastic shields the needle 101 from advancing through the plastic lid receptacle 113.

[0045] As described hereinabove, the blood collection assembly 100 further comprises the gripper pads 112 and 117. The gripper pads 112 and 117 are coupled to or integral with the sides of the hub 102. The gripper pads 112 and 117 enable the user to easily grip the blood collection assembly 100 while in use.

[0046] FIG. 6 is a top cross-sectional view of the blood collection assembly 100 when the needle 101 is in the retracted position. Note that prior to use of the blood collection assembly 100, a plastic lid (not shown) is coupled to the plastic lid receptacle 113 on the distal end of the hub 102 to protect from accidental sticks. In FIG. 6, the plastic lid is shown removed from the blood collection assembly 100, and the needle is retracted.

[0047] Note that the gripper pads 112 and 117 are shown coupled to or integral with the sides of the hub 102. As described hereinabove, the gripper pads 112 and 117 enable the user to easily grip the blood collection assembly 100 while in use.

[0048] Further note that the wings 110 and 111 are shown coupled to the distal end 106 of the hub 102. As described hereinabove, the wings 110 and 111 stabilize the blood collection assembly 100 while in use.

[0049] The blood collection assembly 100 further comprises the needle assembly 200. The needle assembly 200 is moveably contained within the chamber 211 of the hub 102. The needle assembly

200 comprises the tubular member 204. The tubular member 204 comprises the cylindrical channel 204 defined by the inner wall 205. The needle assembly 200 is fixedly coupled to the needle 101 and the tubing 103 (FIG. 5). Additionally, the finger-activated actuator 108 is fixedly coupled to the needle assembly 200 such that when the finger-activated actuator 108 is moved from the distal end 106 to the proximal end 116 of the hub 102, the needle assembly 200 moves with the finger-activated actuator 108.

[0050] The needle assembly 200 further comprises the substantially rectangular-shaped protrusion 202. In operation, when the needle assembly 200 is moved via the finger-activated actuator 108 to the proximal end of the hub 102, the rectangular-shaped protrusion 202 rests within the substantially rectangular-shaped indentation 201 within an inside surface 210 of the hub 102. In this regard, the rectangular-shaped protrusion 202 locks into the rectangular-shaped indentation 201 thereby fixing the needle assembly 200 at the proximal end of the hub 102. Thus, the needle assembly 200, including the needle 101, can no longer move toward the distal end 106 of the hub 102. Therefore, users are protected from the needle 101 when the needle assembly 200 is in the retracted position.

[0051] Further, when the needle assembly 200 is moved to the proximal end 116 of the hub 102, the compressed cotton and plastic shield 301 falls downwardly. The compressed cotton and plastic shield 301 rests between the distal end of the needle 101 and the receptacle 113. Thus, the compressed cotton portion of the shield absorbs any fluid or blood that escapes the needle 101. The plastic portion of the shield 301 safely ensures that the needle 101 does not advance outwardly through the receptacle 113 posing an accidental stick risk.

[0052] FIG. 7 is a side elevational view of the blood collection assembly 100 when the needle is in the retracted position. In this regard, the needle assembly 200 comprises the needle 101. Additionally, the finger-activated actuator 108 is fixedly coupled to the needle assembly 200 such that when the finger-activated actuator 108 is moved from the distal end 106 to the proximal end 116 of the hub 102, the needle assembly 200 moves with the finger-activated actuator 108.

[0053] The blood collection assembly 100 further comprises the compressed cotton and plastic shield 301. When in the retracted position, the compressed cotton and plastic shield 301 is situated between the distal end of the needle 101 and the receptacle 113. The compressed cotton of the

shield 301 absorbs any excess liquid or blood from the needle 101, and the plastic portion of the shield 301 safely ensures that the needle 101 does not advance outwardly through the receptacle 113.

[0054] The blood collection assembly 100 further comprises the angled bottom surface 302. In one embodiment, the surface 302 is angled at an acute angle θ. When the blood collection assembly 100 is in use, the angled bottom surface 302 rests on the patient's arm thereby allowing the needle 101 to be more easily inserted. Further, the angle bottom surface 302 levels the blood collection assembly 100 so that when the finger-activated actuator 108 is moved by the user, the blood collection assembly 100 remains stabilized.

[0055] FIG. 8 is an end elevational view of the blood collection assembly 100 when the needle assembly 200 is in the retracted position and the needle 101 (FIG. 6) is within the hub 102.

[0056] The blood collection assembly 100 comprises the compartment 115 that protrudes from an upper surface 400 of the hub 102 and houses the compressed cotton and plastic shield 301. When the needle assembly 200 is moved to the retracted position, the compressed cotton and plastic shield 301 falls downward and rests between the distal end of the needle 101 and the receptacle 113.

[0057] FIGS. 9-14 illustrate an alternative blood collection assembly 500, which includes similar features to that of blood collection assembly 100. Features described with respect to blood collection assembly 100 can be incorporated into blood collection assembly 500 and features described with respect to blood collection assembly 500 can be incorporated into blood collection assembly 100.

[0058] Blood collection assembly 500 includes needle 501, hub 502 and tubing (not shown). Hub 502 includes a channel 507 extending from a distal end 506 to a proximal end 516 of the hub 502. A wing assembly 509 includes wings 510, 511 and a central enclosure 512 positioned over the proximal end 516.

[0059] Channel 507 includes an open end 518 configured to receive a finger-activated actuator 508 that is fixedly coupled to the needle 501 through a needle holder 519. Channel 507 includes a catch 520 to prevent finger-activated actuator 508 from separating from the channel 507.

Additionally, channel 507 includes a detent 522 (formed of opposed projections on either side of channel 507) that indicates finger-activated actuator 508 is in an advanced position. In the illustrated embodiment, the finger-activated actuator 508 includes corresponding depressions 524 on either side of a channel-engaging element 526 of the finger-activated actuator 508. In the advanced position of finger-activated actuator 508, needle holder 519 is positioned within a distal passageway 528 of the hub 502, whereas depressions 524 are positioned within projections of the detent 522. In an alternative embodiment, finger-activated actuator 508 can include projections that are positioned within corresponding recesses in the channel 507.

[0060] Blood collection assembly 500 further includes an active closure assembly 530 positioned within hub 502. Active closure assembly 530 includes a door 532, a biasing mechanism 534 and a cap 536. Door 532 includes a block 540 and a central projection 542 and is sized to be positioned within a cavity 546 in the hub 502. Block 540 is rectangularly shaped but can be other shapes as desired. Central projection 542 is connected to the biasing mechanism 534. In the illustrated embodiment, central projection 542 is cylindrically shaped, with the biasing mechanism 534 being a helical compression spring surrounding the projection 542.

[0061] Cavity 546 extends into the distal passageway 528. In one embodiment, the cavity 546 extends in a first direction (e.g., vertically when the blood collection assembly 500 is positioned on a table), whereas the distal passageway 528 extends in a second direction that is orthogonal to the first direction (e.g., horizontally when the blood collection assembly 500 is positioned on a table). Cavity 546, in the illustrated embodiment, is similarly shaped to block 540 (e.g., rectangular). However, cavity 546 can be formed of other shapes as desired.

[0062] When finger-activated actuator 508 is in the advanced position of FIG. 13, door 532 abuts needle holder 519 of the finger-activated actuator 508. Upon movement of the finger-activated actuator 508 to a retracted position of FIG. 14, biasing mechanism 534 operates to push door 532 against needle 501 and, once needle 501 is retracted beyond distal passageway 528, door 532 is pushed along cavity 524 into distal passageway 528. As a result, door 532 prevents needle 501 from exiting the hub 502 and protects users of the assembly 500 from being stuck with needle 501 once finger-activated actuator 508 has been retracted.

[0063] During assembly of the blood collection assembly 500, central enclosure 512 is positioned over the proximal end 516 of the hub 502. To facilitate connection between the hub 502 and wing assembly 509, hub 502 includes vertical slots or recesses 550 positioned on either side of the hub 502. Additionally, central enclosure 512 includes corresponding protrusions 552 that are positioned within the recesses 550 when wing assembly 509 is secured to hub 502. Alternatively, the hub 502 can include protrusions that are positioned within corresponding recesses within central enclosure 512. Hub 502 further includes a front recess 554 that interfaces with a front wall 556 of wing assembly 509 to locate the wing assembly 509 relative to the hub 502.

[0064] Various embodiments of the invention have been described above for purposes of illustrating the details thereof and to enable one of ordinary skill in the art to make and use the invention. The details and features of the disclosed embodiment[s] are not intended to be limiting, as many variations and modifications will be readily apparent to those of skill in the art. Accordingly, the scope of the present disclosure is intended to be interpreted broadly and to include all variations and modifications coming within the scope and spirit of the appended claims and their legal equivalents.

CLAIMS

1. A blood collection assembly, comprising:

a needle assembly fixedly coupled to a finger-activated actuator and tubing, the needle assembly comprising a needle;

a hub including a channel in a top surface of the hub, a proximal end and a distal end, the distal end defining a cavity and a distal passageway, the channel slidably engaging the finger-activated actuator such that when the finger-activated actuator is moved from a first position at a distal end of the hub to a second position at a proximal end of the hub the needle retracts within the hub; and

an active closure assembly including a door and biasing mechanism positioned within the cavity such that when the finger-activated actuator is in the second position, the biasing mechanism operates to move the door into the distal passageway.

2. The blood collection assembly of claim 1, further comprising a cap positioned within the hub, wherein the biasing mechanism is positioned between the cap and the door.

3. The blood collection assembly of claim 1, wherein the biasing mechanism is a spring.

4. The blood collection assembly of claim 1, wherein the cavity extends in first direction and the distal passageway extends in a second direction, orthogonal to the first direction.

5. The blood collection assembly of claim 1, further comprising a wing assembly including first and second wings connected with a central enclosure.

6. The blood collection assembly of claim 5, wherein the distal end includes a recess configured to receive a corresponding protrusion on the central enclosure.

7. The blood collection assembly of claim 5, wherein the central enclosure surrounds the distal end.

8. The blood collection assembly of claim 1, wherein the channel includes a detent.

9. The blood collection assembly of claim 8, wherein the detent includes protrusions positioned on either side of the detent.

10. The blood collection assembly of claim 9, wherein the finger-activated actuator includes recesses positioned within the protrusions when in the first position.

11. The blood collection assembly of claim 1, wherein the channel includes a catch positioned at the proximal end.

12. The blood collection assembly of claim 1, wherein the channel includes an open end at the proximal end of the hub.

13. A method of forming a blood collection assembly, comprising:

providing a hub having a channel, a proximal end and a distal end, the distal end including a cavity and a distal passageway;

positioning a finger-activated actuator within the channel such that a needle holder of the finger-activated actuator is positioned in the distal passageway; and

positioning an active closure assembly in the cavity, the active closure assembly including a door and a biasing mechanism, wherein the biasing mechanism presses the door against the needle holder.

14. The method of claim 13, wherein the channel includes a detent and the finger-activated actuator is positioned within the detent.

15. The method of claim 13, further comprising assembling a cap to the hub, wherein the biasing mechanism is positioned between the cap and the door.

16. The method of claim 13, wherein the channel includes an open end at the proximal end of the hub.

17. The method of claim 13, further comprising:

providing a wing assembly having first and second wings connected with a central enclosure; and

positioning the central enclosure over the proximal end of the hub.

18. The method of claim 17, wherein the central enclosure includes a protrusion and the hub includes a recess, wherein the protrusion is positioned within the recess.

19. The method of claim 18, wherein the central enclosure includes a front wall and wherein the hub contacts the front wall.

20. The method of claim 13, further comprising positioning a catch in the channel.

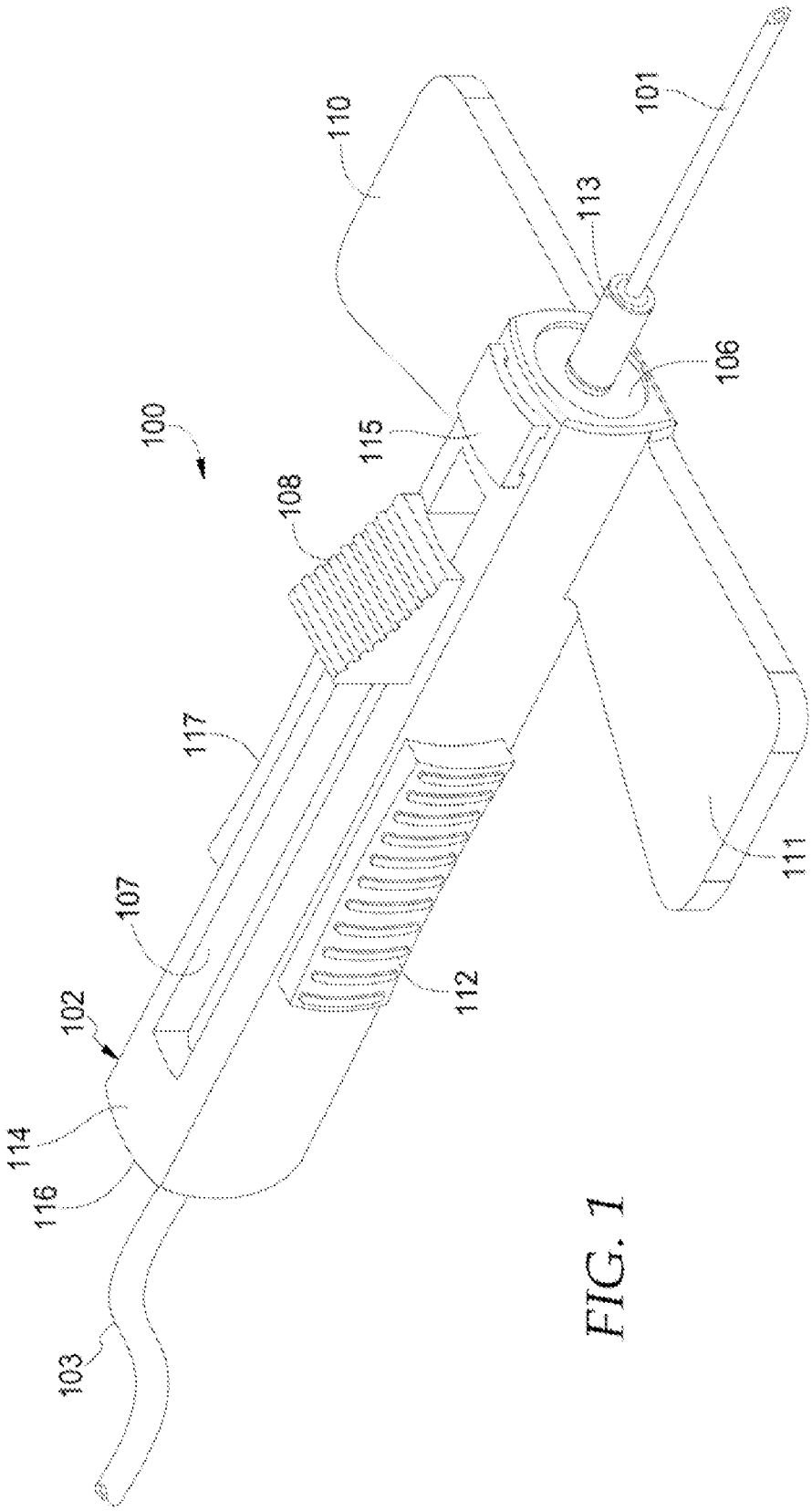

FIG. 1

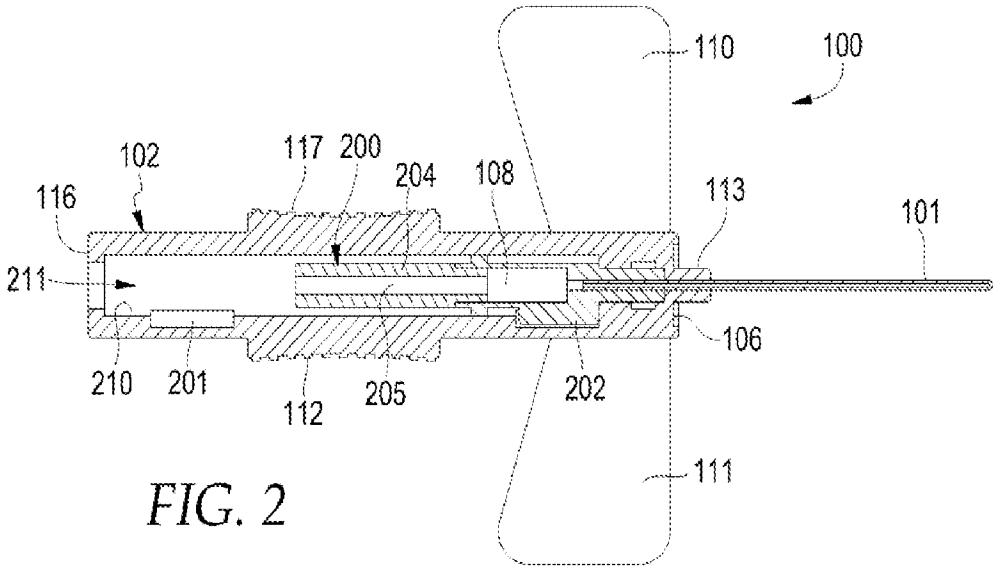

FIG. 2

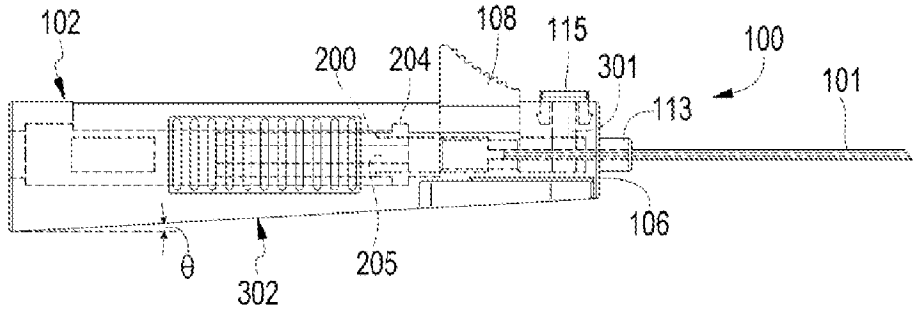

FIG. 3

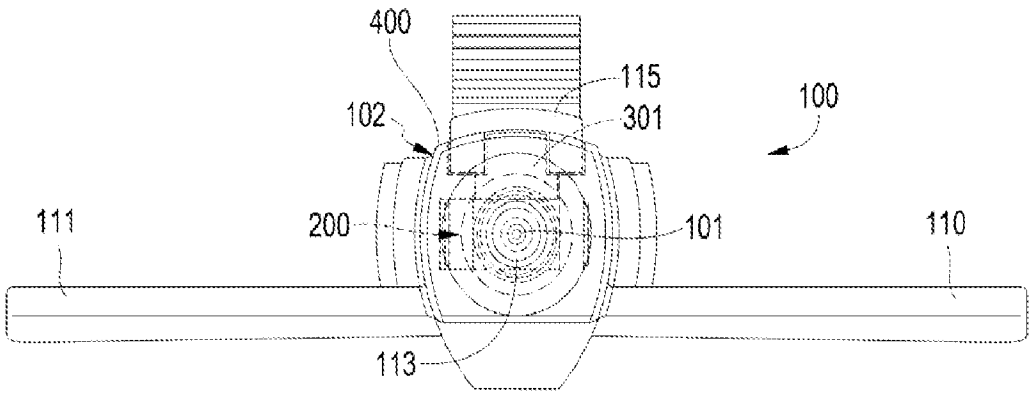

FIG. 4

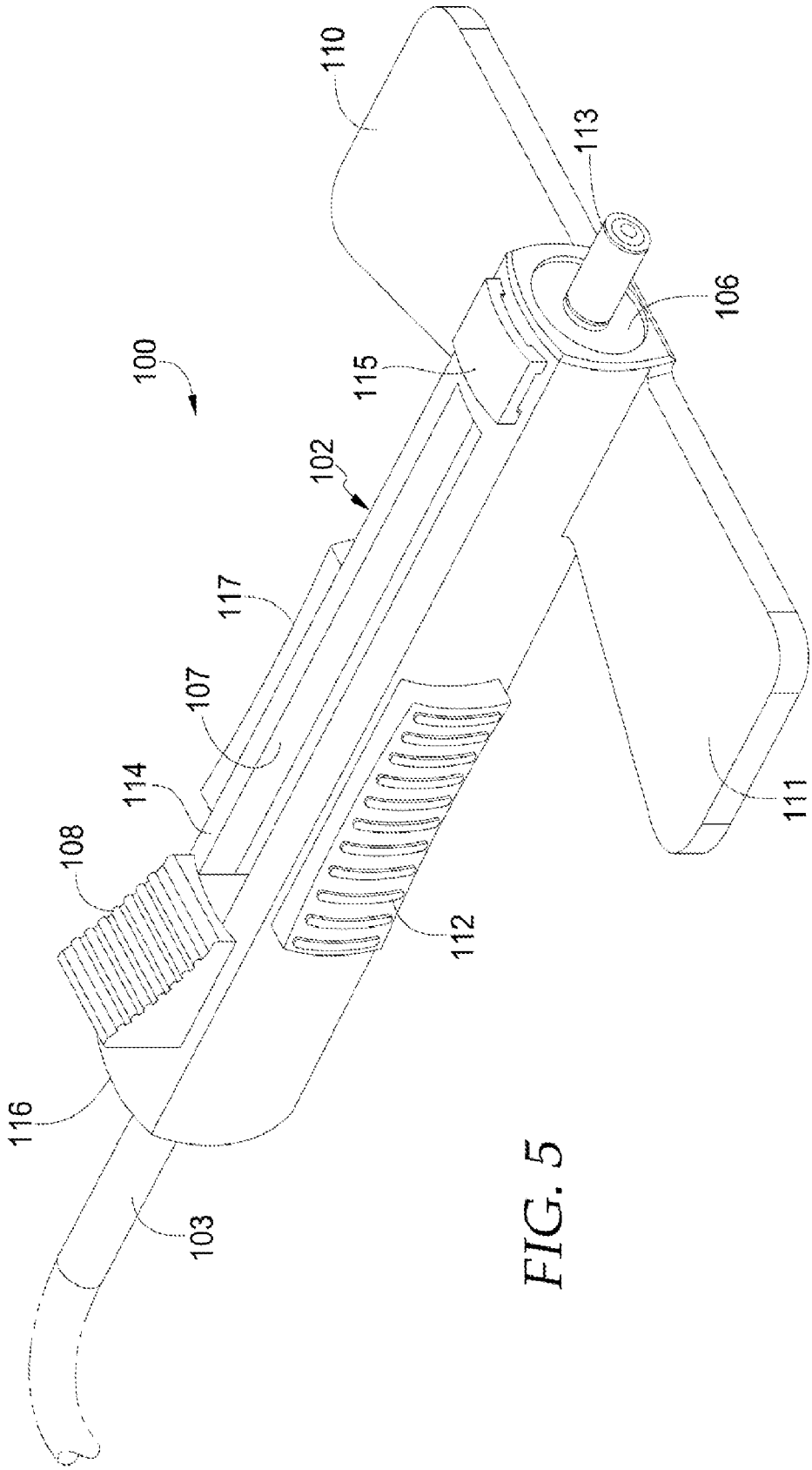

FIG. 5

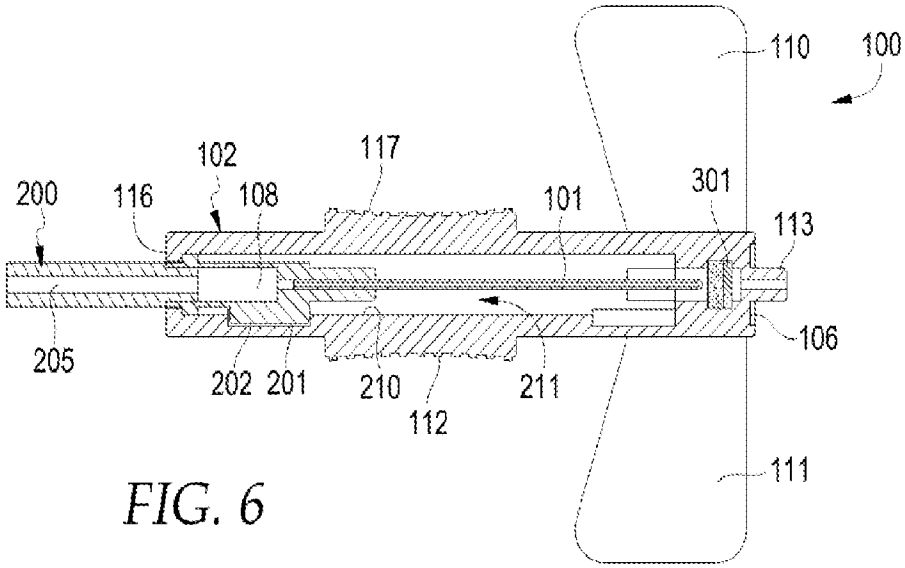

FIG. 6

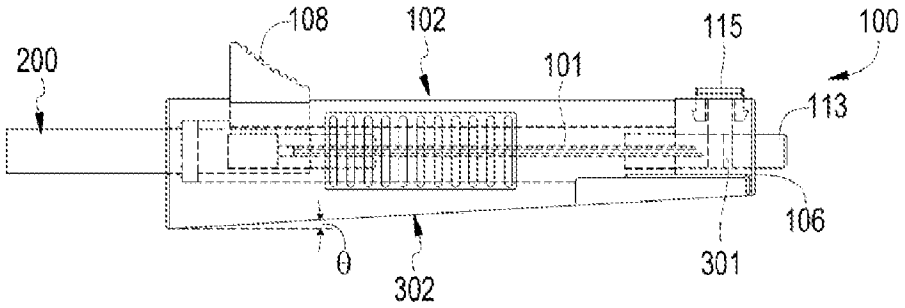

FIG. 7

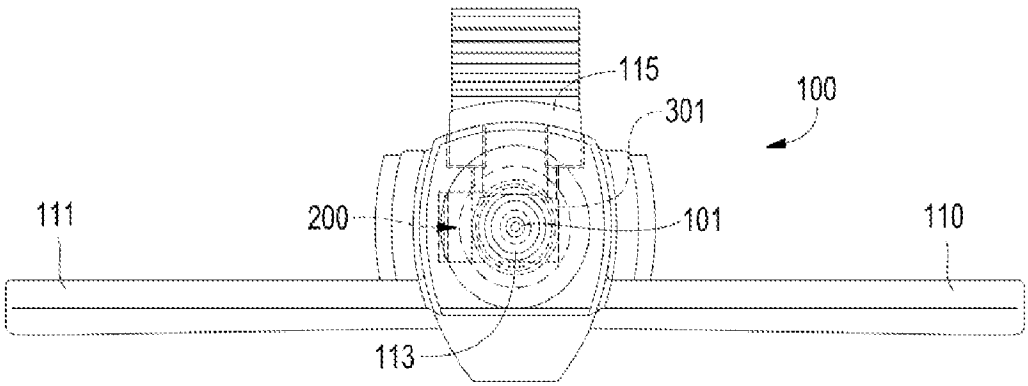

FIG. 8

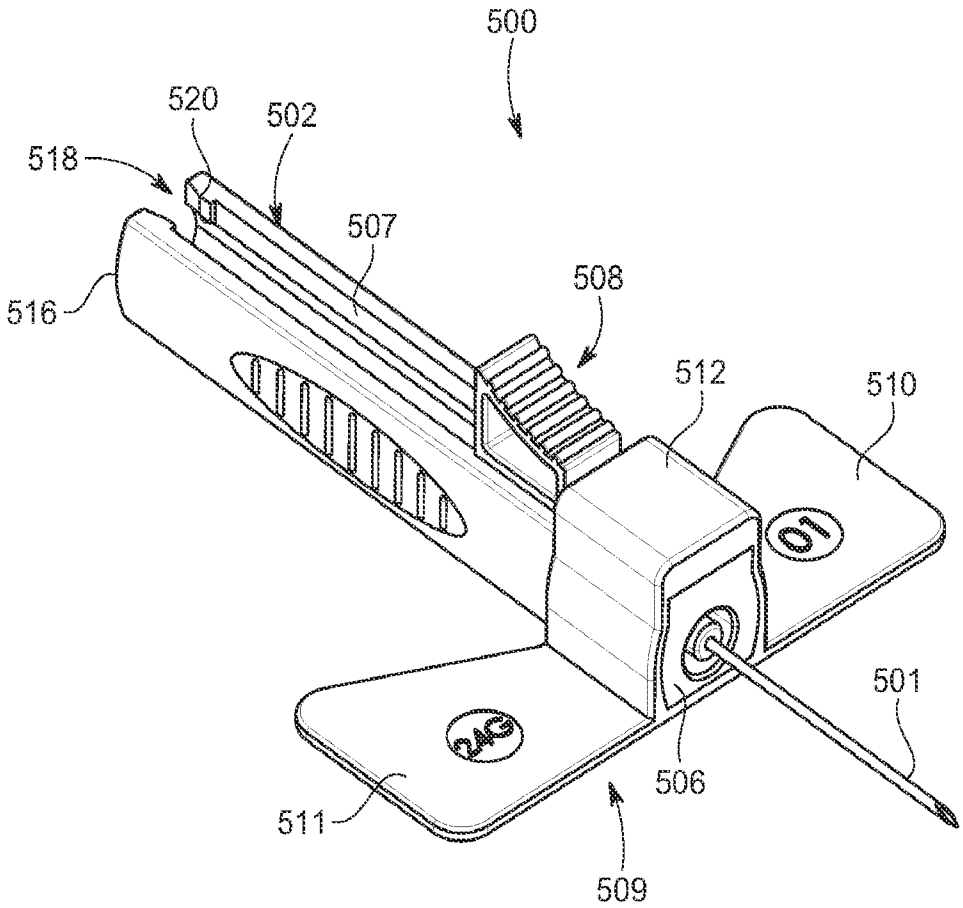

FIG. 9

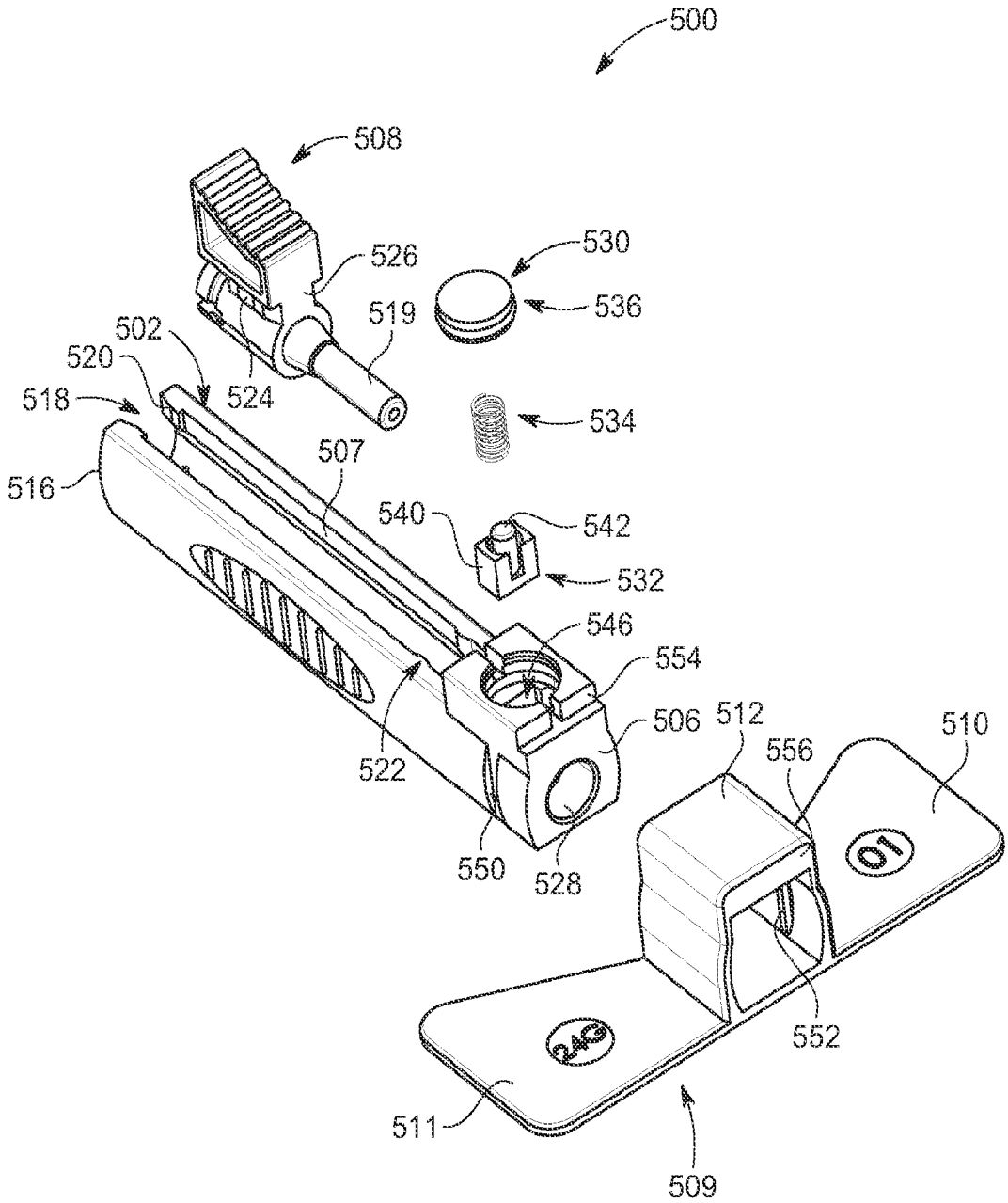
500
508
526
530
536
519
502
520
524
518
534
507
516
540
542
532
546
554
506
512
556
510
522
550
528
552
511
509

FIG. 10

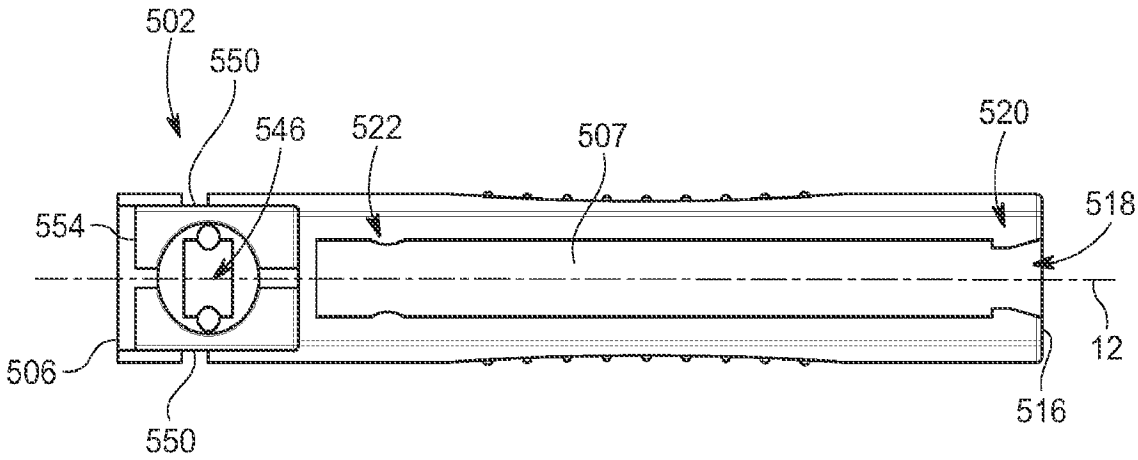
502
550
546
522
507
520
518
554
506
550
516
12

FIG. 11

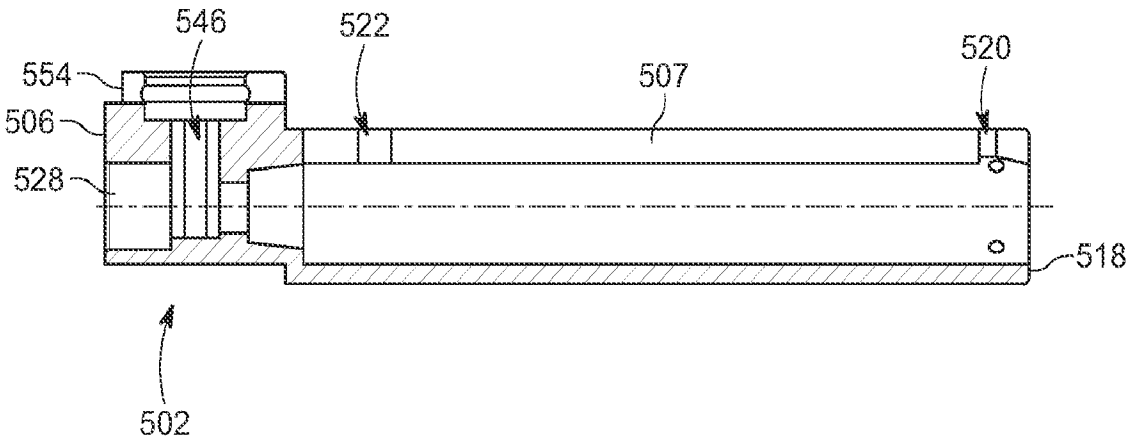
546
522
520
554
507
506
528
518
502

FIG. 12

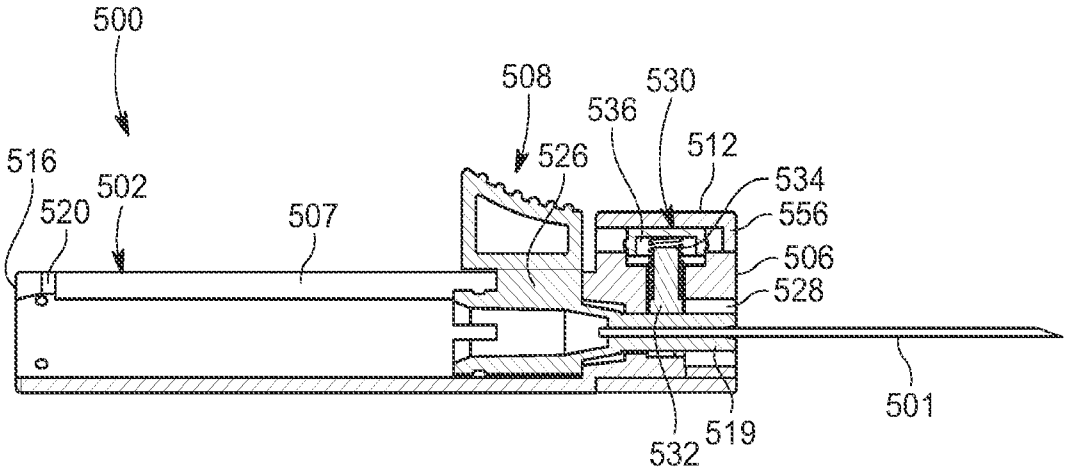
500
508
530
536
512
526
534
516
502
520
507
556
506
528
501
519
532

FIG. 13

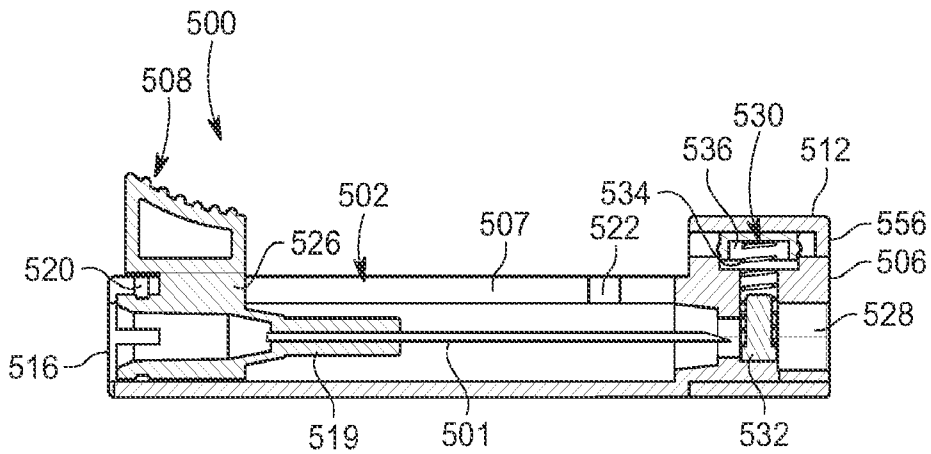
500
508
530
536
512
502
534
507
522
526
556
520
506
528
516
519
501
532

FIG. 14

INTERNATIONAL SEARCH REPORT

International application No.
PCT/US 21/55870

A. CLASSIFICATION OF SUBJECT MATTER

IPC - A61B 5/15 (2021.01)

CPC - A61B 5/15, A61B 5/150916, A61B 5/150534, A61B 5/150374, A61B 5/15074, A61B 5/150885

According to International Patent Classification (IPC) or to both national classification and IPC

B. FIELDS SEARCHED

Minimum documentation searched (classification system followed by classification symbols)
See Search History document

Documentation searched other than minimum documentation to the extent that such documents are included in the fields searched
See Search History document

Electronic data base consulted during the international search (name of data base and, where practicable, search terms used)
See Search History document

C. DOCUMENTS CONSIDERED TO BE RELEVANT

Category*	Citation of document, with indication, where appropriate, of the relevant passages	Relevant to claim No.
X -- Y	US 2020/0330015 A1 (HMG ENTERPRISES LLC) 22 October 2020 (22.10.2020) Entire document.	1-2, 4, 13, 15 --- 3, 5-12, 14, 16-20
Y	US 2008/0171986 A1 (BAID) 17 July 2008 (17.07.2008) Entire document.	3
Y	US 2019/0090798 A1 (SHAW et al.) 28 March 2019 (28.03.2019) Entire document.	5-7, 17-19
Y	US 2004/0143195 A1 (BRESSLER et al.) 22 July 2004 (22.07.2004) Entire document.	8-10, 14
Y	US 2013/0116598 A1 (HOWELL et al.) 09 May 2013 (09.05.2013) Entire document.	11, 20
Y	US 2006/0100575 A1 (RESTELLI et al.) 11 May 2006 (11.05.2006) Entire document.	12, 16
A	US 2016/0158504 A1 (DELTA MED S.P.A. UNIPERSONALE) 09 June 2016 (09.06.2016) Entire document.	1-20
A	US 5,501,674 A (TROMBLEY, III et al.) 26 March 1996 (26.03.1996) Entire document.	1-20
A	US 2013/0296805 A1 (ERSKINE) 07 November 2013 (07.11.2013) Entire document.	1-20

☐ Further documents are listed in the continuation of Box C. ☐ See patent family annex.

* Special categories of cited documents:
"A" document defining the general state of the art which is not considered to be of particular relevance
"D" document cited by the applicant in the international application
"E" earlier application or patent but published on or after the international filing date
"L" document which may throw doubts on priority claim(s) or which is cited to establish the publication date of another citation or other special reason (as specified)
"O" document referring to an oral disclosure, use, exhibition or other means
"P" document published prior to the international filing date but later than the priority date claimed
"T" later document published after the international filing date or priority date and not in conflict with the application but cited to understand the principle or theory underlying the invention
"X" document of particular relevance; the claimed invention cannot be considered novel or cannot be considered to involve an inventive step when the document is taken alone
"Y" document of particular relevance; the claimed invention cannot be considered to involve an inventive step when the document is combined with one or more other such documents, such combination being obvious to a person skilled in the art
"&" document member of the same patent family

Date of the actual completion of the international search	Date of mailing of the international search report
20 December 2021 (20.12.2021)	JAN 21 2022
Name and mailing address of the ISA/US Mail Stop PCT, Attn: ISA/US, Commissioner for Patents P.O. Box 1450, Alexandria, Virginia 22313-1450 Facsimile No. 571-273-8300	Authorized officer Kari Rodriquez Telephone No. PCT Helpdesk: 571-272-4300