(No Model.)

W. AUTENRIETH.

ORTHOPEDICAL APPLIANCE.

No. 575,199. Patented Jan. 12, 1897.

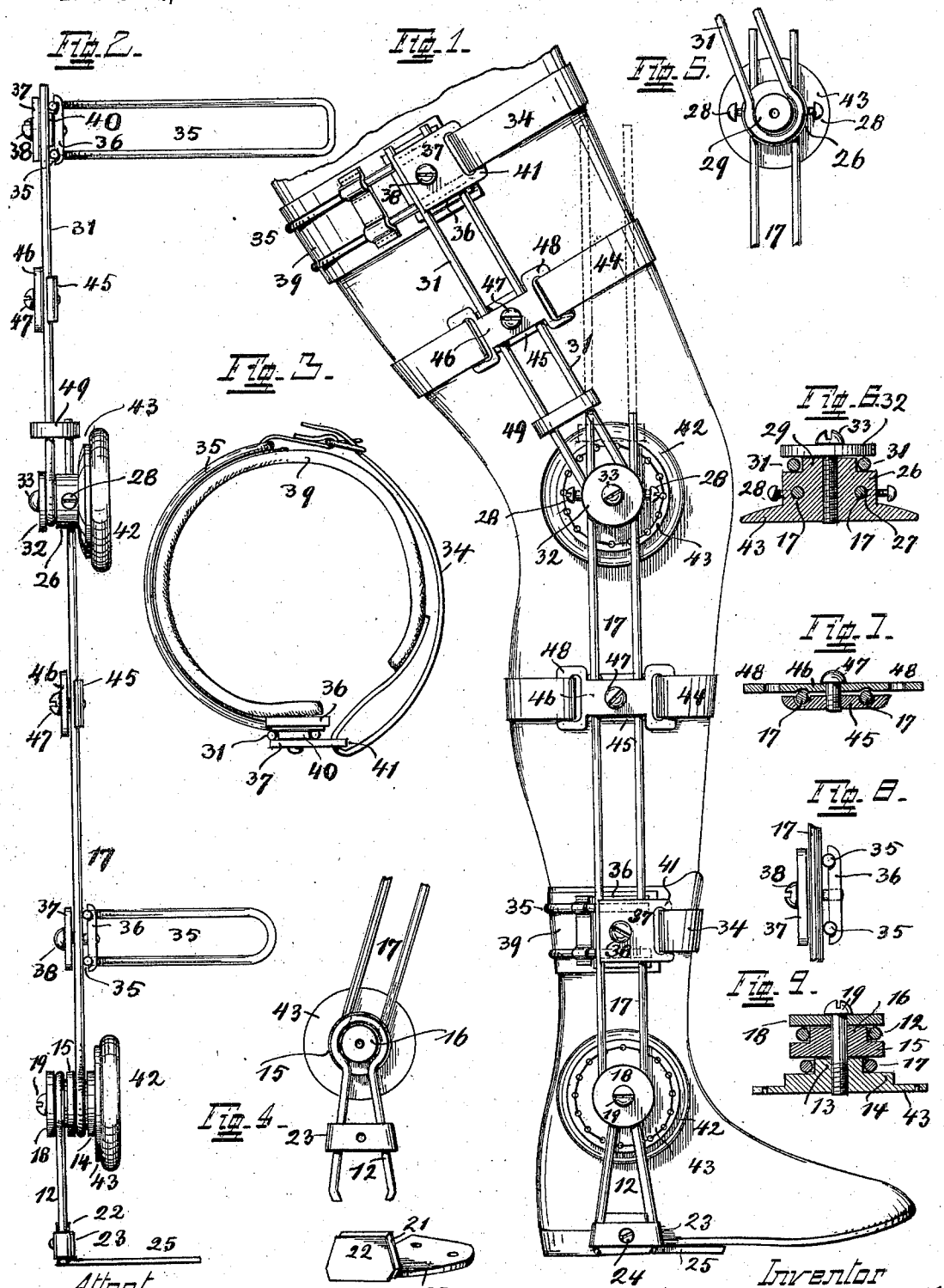

Attest
Arthur Kline.
G. L. Ort

Inventor
William Autenrieth
by C. Spengel Atty.

UNITED STATES PATENT OFFICE.

WILLIAM AUTENRIETH, OF CINCINNATI, OHIO.

ORTHOPEDICAL APPLIANCE.

SPECIFICATION forming part of Letters Patent No. 575,199, dated January 12, 1897.

Application filed June 1, 1896. Serial No. 593,771. (No model.)

To all whom it may concern:

Be it known that I, WILLIAM AUTENRIETH, a citizen of the United States, and a resident of Cincinnati, Hamilton county, State of Ohio, have invented a certain new and useful Orthopedical Appliance; and I do declare the following to be a clear, full, and exact description of the invention, such as will enable others skilled in the art to which it appertains to make and use the same, attention being called to the accompanying drawings, with the reference-numerals marked thereon, which form a part of this specification.

This invention relates to improvements in orthopedical appliances and similar devices used for correction and cure of deformities in the extremities of the human body, particularly the legs thereof.

These appliances consist, substantially, of a strong frame, means whereby it is secured to the limb, and special means carried by this frame and adapted to act in a manner which the particular kind of deformities require. Thus, for instance, for correction of bow-legs devices would be carried by the main frame above and below the knee which act outwardly in a manner to straighten the member, as may be readily understood. Since these deformities occur in great many variations and forms more or less complicated and in persons of different sizes and at different ages, it is necessary that special devices have to be mostly made to suit particular cases, and the same reason makes it impossible to provide in the following description for every contingency. In some cases the frame may extend over the entire length of the limb or only over a part thereof. It may be articulated wherever it passes over a joint to permit the exercise of the normal functions, that is, bending at hips, knee, and ankle, or it may be rigid at one or all of the joints to prevent the natural function of the limb where such is desirable or necessary.

For these reasons the invention is described as applied in a manner which brings in all the features in a general way, so that by slight modifications within the scope of the invention of any one, more, or all of these features any particular and special case may be suited.

One of these general features of my invention is the construction of the main frame and the joints by which its different sections connect, which joints are also adjustable in position, particularly the one at the knee, whereby changes of length in the upper or lower leg, as, for instance, by growth in children, may be accommodated.

Another feature is a series of clamping devices carried by the main frame and adjustably connected thereto, which devices serve as a medium to receive the straps, bandages, and other means whereby the appliance is secured in position, as well as those of such parts whereby, by pressure, tension, or otherwise, a special action and effect upon the limb are attained.

In the following specification, and particularly pointed out in the claims, is found a full description of the invention, its application, parts, and construction, which latter is also illustrated in the accompanying drawings, in which—

Figure 1 shows in a side elevation the appliance attached in position. Fig. 2 is a front elevation of the same. Fig. 3 is a top view of the upper end. Fig. 4 is a detail view of the lower or ankle joint and means for connecting the lower end of the appliance to the shoe. Fig. 5 is a detail view of the knee-joint of the appliance. Fig. 6 is a central section of the same. Figs. 7 and 8 are detail views of clamping devices, which serve as a means for connection of the straps whereby the appliance is attached and of other means acting in a particular way, as the form of the disorder or disease may require. Fig. 9 is a central section through the ankle-joint of the appliance.

In the drawings an appliance is illustrated which for the particular case assumed is necessarily extended over the whole leg, and therefore consists of three sections, one for the foot, one for the lower leg, and one for the upper leg. To permit the leg to exercise its functions, these sections are connected by joints at ankle and knee, permitting free movement thereat. This frame is constructed of wire members, preferably two, which, while sufficiently strong, are much lighter and neater in appearance than the old-fashioned flat iron bar.

Each section is preferably made of one piece of wire bent and doubled up to form the two

members. The fulcrums or pivotal points about which the sections turn at the joints are located at the points where the wires are bent and at the turn between the two members thereof. These joints or fulcrums consist, substantially, of flanged blocks or bosses and washers held together by screws in a manner to permit at least one if not the two frame-sections to turn. At the ankle-joint the wire 17 of the lower leg-section passes around a boss 13 and rests against a flange 14 thereof. It is held in place by a washer 15, which is provided with a boss 16, around which the wire 12, which forms the frame of the lowest or foot section, passes. The connection is completed by a top washer 18 and screw 19, which holds all parts together.

The lower ends of wire 12 are bent and lie in grooves 21 of a plate 22, in which grooves they are held by a band 23, which passes over all and is held in place by a screw 24.

25 is another plate extending out from plate 22 and is secured, preferably, by rivets to the sole of the shoe. The upper ends of wire 17 support the parts which form the joint opposite the knee, which parts consist, first, of a flanged boss 26, which is grooved or bored at 27 to receive the upper ends of wires 17. Set-screws 28 hold this boss at proper height. In a recess at the outer edge of this boss and around a boss 29, formed thereby, lies the lower end of the frame-section for the upper leg, consisting, substantially, of a wire 31, doubled to form the two members before mentioned. A top washer 32, held in place by a screw 33, completes the joint.

It will be seen that since the distance between the ankle and knee joint is adjustable by reason of boss 26 being capable of moving up or down on wires 17 and held in any position thereon by set-screws 28 the position of the knee-joint may be accurately adjusted to the particular person, and in children allowance may thereby be made for growth. This possibility to fit and adjust permits also within certain limits the making up of these appliances in stock, doing away with special work made to order for every case, thereby reducing the manufacturing cost and resulting in cheaper work.

In addition to the connection to the shoe the appliance is held in place by straps 34, one around the lower and one around the upper leg. If the appliance, for instance, would not extend above the knee, the latter strap would be omitted or connected immediately below the knee. In addition to these straps braces 35 are used, also of wire, which help in holding the appliance more firmly in place and prevent it from shifting its position. These braces are held in place on the main frame by clamping devices consisting substantially of two members or plates, one, 36, below and another one, 37, above it, the two held together by a screw 38, and whereby said braces are not only clamped tightly against the main frame, but the wires forming the latter, as well as the braces, are also held in their proper position with reference to each other. One or the two of these plates may be grooved for reception of the wires of the frames 17 31, as well as of the braces 35. (See Figs. 2 and 8.)

The top plate has preferably a boss 40, forming a shoulder which reaches between the upright wires and serves to hold them the proper distance apart.

39 is a pad to cover the wire braces. (Only shown in Figs. 1 and 3.) One end of each of the straps is secured to these pads, after which they are passed one through a loop 41, forming a part of plate 37, and the other through the loop formed by the wires of the braces.

It will at once be understood from the manner of their connection that the position of braces 35 and straps 34 is readily adjustable on the sections of the main frame. Additional pads 42 are preferably provided under the knee and ankle joints, which are stitched to flanges 43 on bosses 13 and 26, respectively. No particular novelty is claimed for these pads and straps. The special devices which the treatment of the particular case requires may be held in place by straps 44, which in turn are also connected by clamping devices to the main-frame sections. These devices consist of two plates 45 and 46, which by means of a screw 47 are clamped against the members of the main frames with the wires 17 and 31 thereof between them. Grooves may be provided in plates 45 and 46 for reception of the wires, as shown in Fig. 7, whereby also the position of all the parts and distance of the wires is better maintained and twisting of the plates prevented. One of these two latter, preferably the upper one, is provided with loops 48 to permit connection of straps 44. Any number of these clamping devices may be used to suit the exigencies of the case, and, being adjustable, they may be located wherever necessary.

In cases where it is desirable that the wearer be prevented from bending the knee the frame may be made stiff at the knee connection by a sliding catch 49, supported on wires 31 and adapted to engage the upper ends of wires 17.

Instead of having the frame-sections formed each of one piece of wire bent and doubled, as shown at 12, 17, and 31, two separate pieces of wire might be used for each frame-section, and the ends of which pieces might be secured in a manner as shown in Fig. 6, where wires 17 pass into openings in boss 26.

Having described my invention, I claim as new—

1. In an orthopedical appliance, the combination of a main frame formed of wire rods and in sections corresponding with the parts of the leg, such sections articulated in correspondence with the joints of the leg, the position of the knee-joint being adjustable on the frame, means to hold the appliance in position and means whereby any special devices

which the cure of the particular disorder requires, are connected to the main frame.

2. In an orthopedical appliance, the combination of a main frame formed of wire rods and in sections corresponding with the parts of the leg, such sections articulated in correspondence with the joints of the leg, means whereby the frame may be made rigid at the knee-joint, and means to hold the appliance in position.

3. In an orthopedical appliance, the combination of a main frame formed in sections constructed of wires 12, 17 and 31, bent and doubled to form two members for each section, bosses at the turns of the wires and adjoining ends of the sections to form the pivotal points of a flexible joint thereat, washers to hold the wires to the bosses at the joints, and means to hold the appliance in position.

4. In an orthopedical appliance, the combination of a main frame formed of wire rods and in sections corresponding with the parts of the limb, such sections articulated in correspondence with the joints of the limb, and clamping devices adapted to be connected to the wire members and adjustable in position thereon, to receive the means whereby the appliance is held in position, as well as those special devices which the cure of the particular case requires.

5. In an orthopedical appliance, the combination of a main frame in sections, formed of wires 12, 17 and 31, bent and doubled to form two members for each section, bosses at the turns of the wires and adjoining ends of the sections to form the pivotal points of a flexible joint thereat, washers to hold the wires to the bosses at the joints and clamping devices adapted to be connected to the wire members and adjustable in position thereon to receive the means whereby the appliance is held in position, as well as those special devices which the cure of the particular case requires.

6. In an orthopedical appliance, the combination of a main frame, in sections formed of wires bent and doubled to form two members or rods for each section, a foot-section 12, a plate 25 secured to the shoe-sole, an upright plate 22 grooved at its edges to receive the members of wire 12, a sleeve 23 to hold the latter in place on plate 22 and in the grooves thereat and clamping devices adapted to be connected to the wire members and adjustable in position thereon, to receive the means whereby the appliance is held in position, as well as those special devices which the cure of the particular case requires.

7. In an orthopedical appliance, the combination of the main frame in sections formed of wires bent and doubled to form two members or rods for each section, a foot-section 12 secured to the shoe, a section 17 for the lower leg, a boss 13 which receives the wire of the latter section, a flanged boss 16 which receives the lowest or foot section and at the same time holds section 17 in place, a top washer and screw connection whereby the two bosses with the ends of the sections are held together and clamping devices adapted to be connected to the wire members and adjustable in position thereon, to receive the means whereby the appliance is held in position, as well as those special devices which the cure of the particular case requires.

8. In an orthopedical appliance, the combination of the main frame in sections formed of wires bent and doubled to form two members or rods for each section, a foot-section 12 secured to the shoe, a section 17 for the lower leg, the two connected by a flexible joint, an upper leg-section formed by a wire 31, a boss 26 which receives the upper end of the lower leg-section, a boss 29 which receives the lower end of the upper leg-section, the two bosses being connected to each other, one of the sections only being capable of turning on its boss while between the other section and its boss, a sliding movement is obtained for the purpose of adjusting position of the joint, a top washer and screw connection which completes the joint and clamping devices adapted to be connected to the wire members and adjustable in position thereon, to receive the means whereby the appliance is held in position as well as those special devices which the cure of the particular case requires.

9. In an orthopedical appliance, the combination of a main frame in sections formed of wires bent and doubled to form two members or rods for each section, the sections being connected by articulated joints and clamping devices consisting of top and bottom plates and a screw connection whereby the two plates are held to each other and to the wires of the sections with the latter between them, one of the plates being provided with loops adapted to receive the straps whereby the appliance is held in place and the special devices which the cure of the particular case requires.

10. In an orthopedical appliance, the combination of a main frame, in sections formed of wires bent and doubled to form two members or rods for each section, the sections being connected by articulated joints, braces 35 also of wires and clamping devices to secure them to the main-frame sections and consisting of top and bottom plates with a screw connection whereby the two plates are held to each other and to the wires of the sections with them and the wires forming the braces between them and means whereby the special devices which the cure of the particular case requires are secured to the main frame.

11. In an orthopedical appliance, the combination of a main frame in sections formed of wires, the lower leg-section formed of a wire 17, the upper leg-section formed of a wire 31, each bent and doubled to form two members, a boss which receives the free ends of one section, the connection being an adjustable one, the said boss also forming the pivotal support for the other section and constitutes the articulated joint, means like a

screw-connected washer whereby the parts of the latter are held together, a sliding catch 49 on the pivoted section adapted to engage with the free ends of the wires of the other section and clamping devices adapted to be connected to the wire members and adjustable in position thereon, to receive the means whereby the appliance is held in position, as well as those special devices which the cure of the particular case requires.

In testimony whereof I hereunto affix my signature in presence of two witnesses.

WILLIAM AUTENRIETH.

Witnesses:

H. DANGERS,

C. SPENGEL.