(12) UK Patent Application (19) GB (11) 2 207 313 (13) A

(43) Application published 25 Jan 1989

(21) Application No 8717022

(22) Date of filing 18 Jul 1987

(51) INT CL⁴
H03G 3/32

(52) Domestic classification (Edition J):
H3G 11X 12E 12F 12P 12X SE

(56) Documents cited
GB A 2123230 GB A 2013051 GB 1518574

(58) Field of search
H3G
Selected US specifications from IPC sub-class
H03G

(71) Applicant
James Melville Buick
200 Buxton Road, Disley, Stockport, SK12 2LH

(72) Inventor
James Melville Buick

(74) Agent and/or Address for Service
James Melville Buick
200 Buxton Road, Disley, Stockport, SK12 2LH

(54) Signal controlled by noise signal compensator

(57) A noise compensation circuit which dynamically responds to the measured or estimated noise detected at 1 which is received with a signal by altering the transmitted signal's dynamic range at 9 and/or level at 11 in such a manner as to continuously stabilise the signal to noise ratio at a receiver. The signal compression at 9 and gain at 11 are both proportional to noise. Although of application in communications systems the main applications of this circuit are expected to be in motor car and domestic audio equipment where the signal channel is that between the loud-speaker(s) and the listeners ears. Here it can provide a great improvement in listening comfort in an environment subject to varying noise.

FIGURE 1

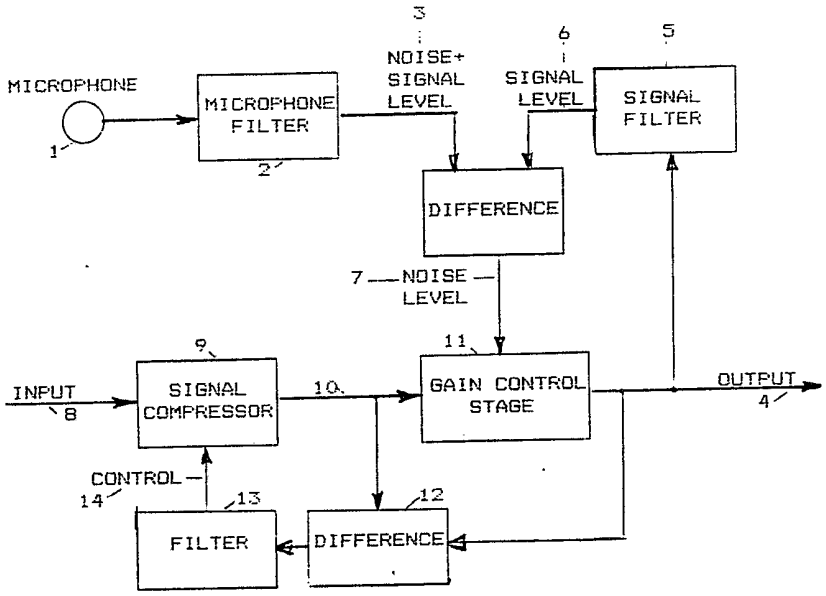

GB 2 207 313 A

FIGURE 1

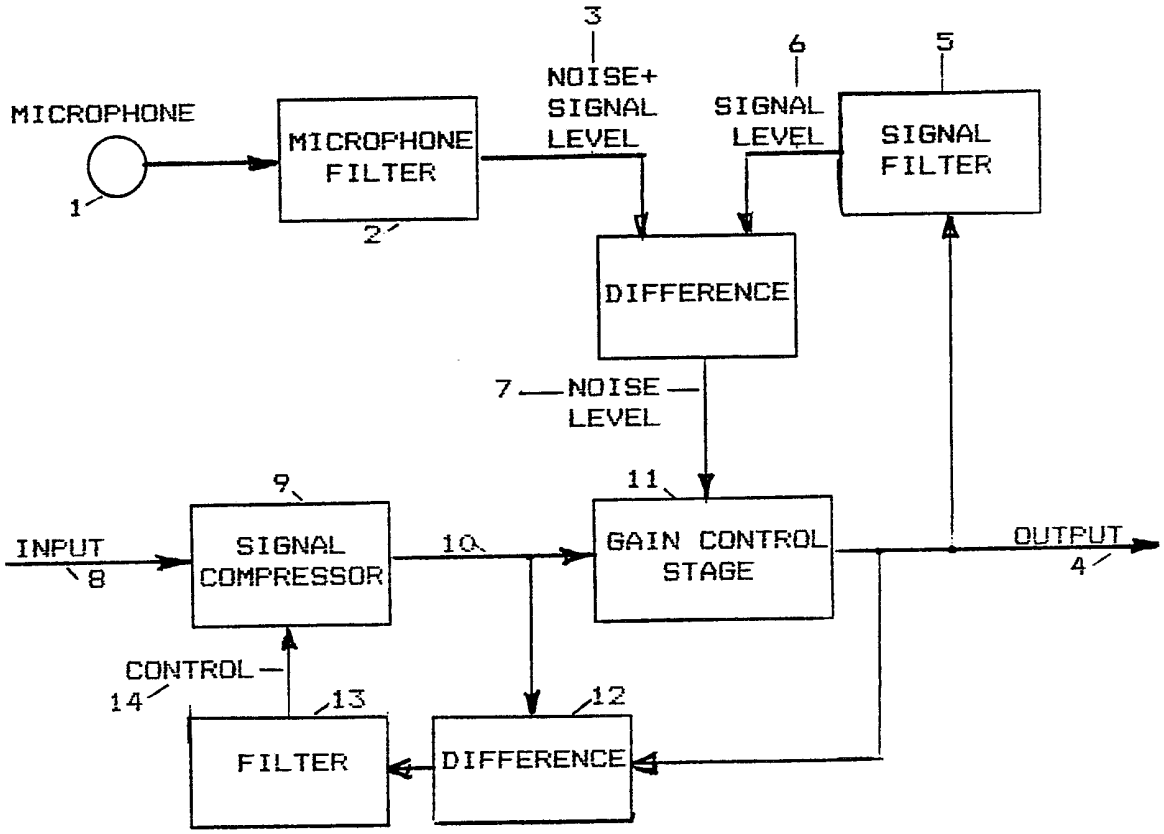
MICROPHONE
1
MICROPHONE FILTER
2
3
NOISE+ SIGNAL LEVEL
6
SIGNAL LEVEL
5
SIGNAL FILTER
DIFFERENCE
7
NOISE LEVEL
9
SIGNAL COMPRESSOR
INPUT
8
10
11
GAIN CONTROL STAGE
OUTPUT
4
CONTROL
14
13
FILTER
12
DIFFERENCE

NOISE DRIVEN SIGNAL COMPENSATOR

This invention relates to a circuit for dynamically modifying a signal to compensate for the measured or estimated channel noise level.

Noise compensation and reduction circuits are common features of electronic equipments. However they are usually designed to reduce only noise introduced within the "technical link". In audio systems for example, this is between the microphones and loudspeakers including all transmission, recording, playback and amplification. No compensation for noise introduced in other parts of the total system from original signal source to final receiver (musical instrument to ears) is usual although care is taken to minimise noise in recording studios. This leaves the loudspeaker(s) to ears link without compensation.

The most perfectly reproduced signal issuing from a loudspeaker in a noisy environment, say, a motor car, may be inaudible due to ambient noise or may only be made audible by increasing it's volume, resulting in the need to reduce the volume to a comfortable level again once the noise has subsided. Merely adjusting the signal level is not entirely satisfactory, in that the instantaneous signal to noise ratio determines audibility. The quieter passages need to be increased more than does the average level and the louder passages less.

The present invention provides both means to alter the dynamic range of, and means to vary the gain applied to, an input signal, in response to a signal representing the noise level of the channel to which the signal is to be applied wherein the signal compression and circuit additional gain are both proportional to the measured and/or estimated channel noise level. In the absence of noise no compression or additional gain is applied to the input signal.

The deliberate distortion of the signal in this way can greatly improve the signal quality as seen by the receiver and is particularly beneficial where an audio signal is being listened to in an environment subject to varying noise.

It is envisaged that for most audio applications the circuit will be implemented as an integrated circuit providing two signal channels and one noise level sensor. The invention can be applied to multi-channel systems responding to one or more noise signals

The principle could be applied to a variety of communication links where advantage may be gained by reducing or minimising the transmitted level but where varying noise requires the signal level to be varied to maintain an acceptable level relative to the noise.

A specific embodiment of the invention is described here by way of example with reference to Figure 1 :-

This is an application of the invention to a motor car monaural audio system. It involves the insertion of an additional circuit after the volume, balance and tone controls but before the output amplifier, and the fitting of a microphone 1 to enable a measure of the ambient noise within the vehicle to be made. The microphone is positioned such that it is subject to a level of ambient noise related to that to which the occupants are subjected, possibly on the audio unit facia. The audio signal also picked up by the microphone is cancelled within the noise compensator circuit.

The microphone signal is amplified, filtered, rectified and smoothed by the microphone filter 2 to provide an output 3 representing the total audio signal plus noise level to which the vehicle occupants are subjected. A sample of the compensator output 4 as fed to the audio system output amplifier is similarly processed by the signal filter 5 to provide an output 6 representing the signal level output from the audio system speakers. The signal level output 6 is subtracted from the signal plus noise level output 3 to yield a measure of the ambient noise level 7.

The input signal from the audio system 8 is first applied to a signal compressor circuit 9 but instead of the compression control signal being derived from the compressor output as is usual it is obtained from the later gain control stage of the circuit 11.

The compressor output is fed to a circuit 11 the gain of which is increased from a fixed level under control of the ambient noise level signal 7. The output of this stage provides both the compensator output 4 back to the basic audio system and, with the stage input signal 10 subtracted from it 12, and suitable filtering 13 the control signal 14 for the compressor stage. Thus the amount of compression is proportional to the ambient noise level as is the compensator additional gain. Stage biases and gains are set such that the compensator gives constant gain and no compression in the absence of noise. Appropriate filtering is applied to optimise the circuit's response to acoustically important frequencies, the particular environment and to achieve optimum attack and decay times.

CLAIMS

1 A circuit having both means to alter the dynamic range of, and means to vary the gain applied to, an input signal, in response to a signal representing channel noise level of the channel to which the signal is to be applied wherein the signal compression and circuit additional gain are both proportional to the noise level signal.

2 A circuit as in claim 1 in which a signal compression stage is followed by a noise level controlled variable gain stage biased to give a fixed gain at zero noise wherein the subtraction of the gain stage input from it's output yields a signal proportional to noise level which is applied to the compression stage control input.

3 A circuit as in claims 1 and 2 having a means of deriving a noise level signal by differencing the output from a sensor exposed to the channel and a sample of the transmitted signal.

4 A circuit as in claims 1 and 2 having a means of deriving a noise level signal from parameters other than noise, to which the channel noise is related.

5 A circuit as in claims 1 and 2 which responds to a noise level signal based on a combination of measured and estimated noise levels as in claims 3 and 4.

6 A noise compensation circuit as in claims 1 to 5 which applies signal compression only.

7 A noise compensation circuit as in claims 1 to 5 which varies the gain only.

8 A multi-channel implementation of any of the circuits of claims 1 to 7 with a single noise level input.

9 A multi-channel implementation of any of the circuits of claims 1 to 7 with multiple noise level inputs.

10 The application of the circuits of claims 1 to 9 to domestic (including motor car) radio, audio and television equipment.

11 The application of the circuits of claims 1 to 9 to communications receiving equipment to improve the audibility of the output signal particularly where the receiver is in an environment subject to noise.

12 The application of the circuits in claims 1 to 9 to public address systems.

13 The application of the circuits of claims 1 to 9 to non-acoustic signal transmission channels.

14 The application of the circuits of claims 1 to 9 for the purpose of reducing or minimising the mean transmitted level.

15 The provision of a microphone in, on or with an audio equipment to monitor noise for the purpose of noise compensation as in claims 1 to 9.

16 The mounting of a microphone in or on the facia of an in-car or other audio equipment as a means of sensing ambient noise and audio signal levels.

17 The provision of means to filter noise and signal to select the frequencies to which the control circuits of the circuits in claims 1 to 9 respond.

18 The provision of means to bias the stage gains of the circuits of claims 1 to 9 such that the with no noise no compression occurs and the circuit gain is unity or a constant.

19 The provision of means to set the attack and decay times of the circuits of claims 1 to 9.

Published 1988 at The Patent Office, State House, 66 71 High Holborn, London WC1R 4TP. Further copies may be obtained from The Patent Office, Sales Branch, St Mary Cray, Orpington, Kent BR5 3RD. Printed by Multiplex techniques ltd, St Mary Cray, Kent. Con. 1/87.