(No Model.)

G. SPARROW.

FOLDING PACKING CASE.

No. 590,283. Patented Sept. 21, 1897.

Fig. 1.

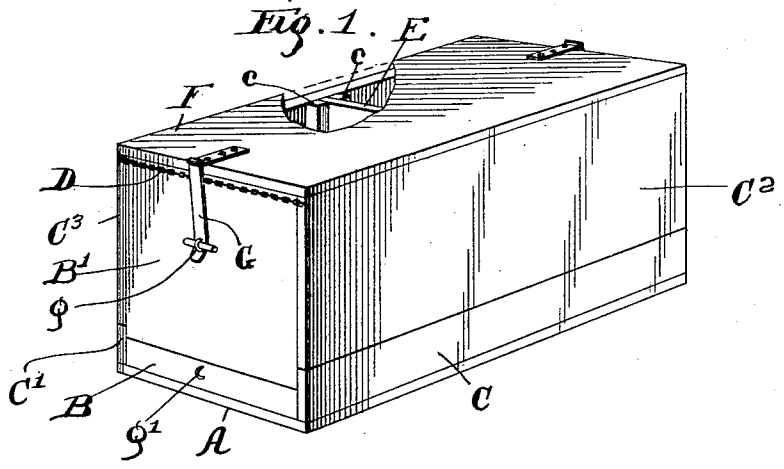

Fig. 2.

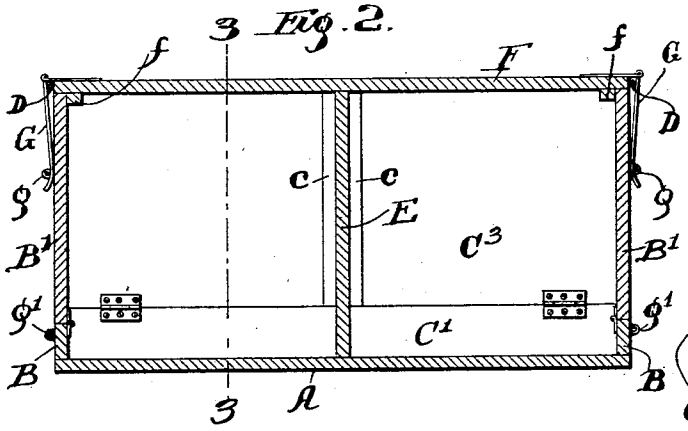

Fig. 3.

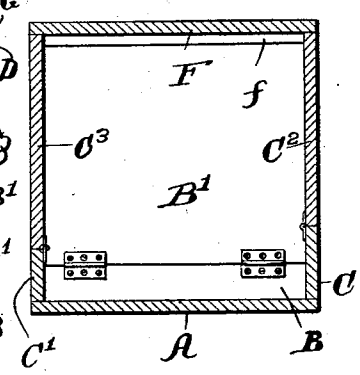

Fig. 4.

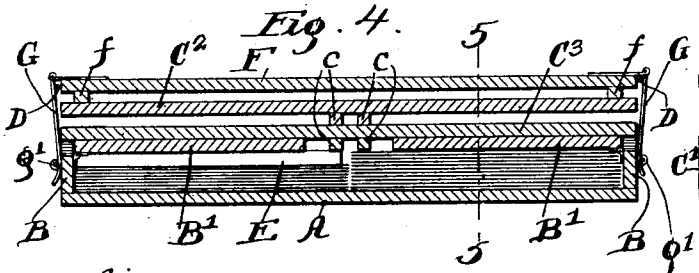

Fig. 5.

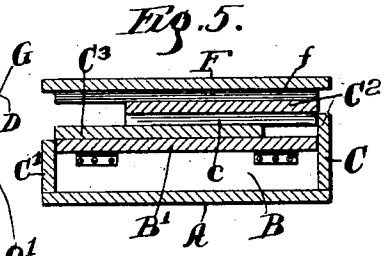

Witnesses:
Chas. O. Shervey
R. O. Bailey

Inventor:
George Sparrow
by Wiles Greene & Bitner
Attys.

THE NORRIS PETERS CO., PHOTO-LITHO., WASHINGTON, D. C.

UNITED STATES PATENT OFFICE.

GEORGE SPARROW, OF FREEPORT, ILLINOIS, ASSIGNOR OF ONE-HALF TO WILLIAM DRAKE, OF BELVIDERE, ILLINOIS.

FOLDING PACKING-CASE.

SPECIFICATION forming part of Letters Patent No. 590,283, dated September 21, 1897.

Application filed April 29, 1897. Serial No. 634,324. (No model.)

To all whom it may concern:

Be it known that I, GEORGE SPARROW, a citizen of the United States of America, residing at Freeport, in the county of Stephenson and State of Illinois, have invented certain new and useful Improvements in a Folding Packing-Case, of which the following is a specification.

My invention relates to improvements in folding packing-cases adapted for various uses, the form shown in the drawings, however, being especially intended for use as an egg-case.

The invention is fully described and explained herein and shown in the drawings referred to, in which—

Figure 1 is a perspective view of a packing-case embodying my improvements, a portion of the top being broken away to show the transverse partition. Fig. 2 is a longitudinal vertical section of the case shown in Fig. 1. Fig. 3 is a transverse vertical section of the case, and Figs. 4 and 5 are longitudinal and transverse vertical sections, respectively, of the case folded.

In the figures, A is the rectangular bottom of a box of any desired size and proportions, and B B are two stationary end pieces permanently attached to the bottom and of any desired height, the preferred height in an egg-case being about two inches.

B′ B′ are two folding end pieces hinged at their lower edges to the stationary end pieces B B, so as to fold inward from the vertical positions shown in Fig. 2 to the horizontal positions shown in Fig. 4, leaving beneath them a space or chamber whose use is hereinafter set forth.

C C′ are two stationary side pieces of different heights permanently attached to the bottom, and C^2 C^3 are folding side pieces hinged to the stationary side pieces, so as to fold inward, the stationary side piece C′ being of such height that the folding side C^3 lies immediately above the end pieces B′ B′ when folded, and the stationary side piece C being of such height that the folding side C^2 lies over the side C^3 when folded. The upper corners of the folding side pieces C^2 C^3 are connected by a chain D or other flexible device adapted to limit the degree of their separation when raised, but to permit them to fold readily when it is desired to knock the box down for storage. Each of the folding side pieces C^2 C^3 is provided midway of its length with two vertical cleats *c c*, the four cleats being adapted to form guides for holding in place a transverse partition E, which is removed before folding the case.

A cover F, preferably of the same size as the bottom A, lies upon the upper edges of the side and end pieces when the latter are raised and thus closes the case, this cover being provided with transverse cleats *f f*, adapted to lie immediately within the end pieces B′ B′ when raised and thus fix their position and prevent them from folding inward accidentally. The cover is also provided at each end with a hinged hasp G, adapted to engage a corresponding staple *g* in the folding end B′ when the ends are raised and also to engage a staple *g′* in the stationary end piece B when the case is folded.

It will be seen that when the case is expanded ready for use the end pieces are held in place by the cleats on the cover, the side pieces are held against inward movement by the ends and the transverse partition and are secured against outward movement by the chains D D, and the hasps G and staples *g* lock the cover securely in place. Furthermore, when the case is folded all the parts come into the most compact relation, and the hasps G and staples *g′* lock all the parts together, so that they may be conveniently stored.

The chamber beneath the end pieces B′ B′ when folded, as shown in Figs. 4 and 5, not only receives the transverse partition, but also contains the folding pasteboard cells which are used in packing eggs in the case, the entire packing-case with its partition and pasteboard filling being thus compactly and securely bound together in the most convenient form for shipment or storage.

Having now described and explained my invention, what I claim as new, and desire to secure by Letters Patent, is—

The combination with the bottom, A, having end stationary pieces, B, B, and stationary side pieces, C, C′, of the folding ends, B′, B′, the folding sides, C^2, C^3, the chains, D, con-

necting the upper corners of the side pieces, the top, F, provided with transverse cleats, *f*, *f*, and the hasps and staples, G, *g*, adapted to connect the cover with the end pieces when raised.

In witness whereof I have hereunto set my hand, at Freeport, in the county of Stephenson and State of Illinois, this 24th day of April, A. D. 1897.

GEORGE SPARROW.

Witnesses:
D. J. MANNING,
JAMES F. DOUGLAS.