Nov. 20, 1928. 1,691,924

E. H. FALK

MACHINE FOR MAKING MATTRESSES

Filed Dec. 16, 1927

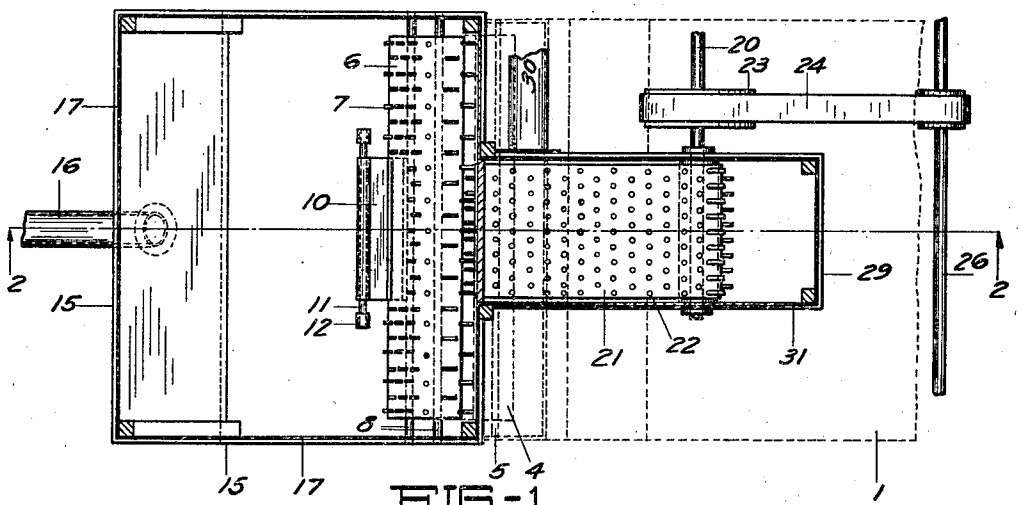

FIG-1

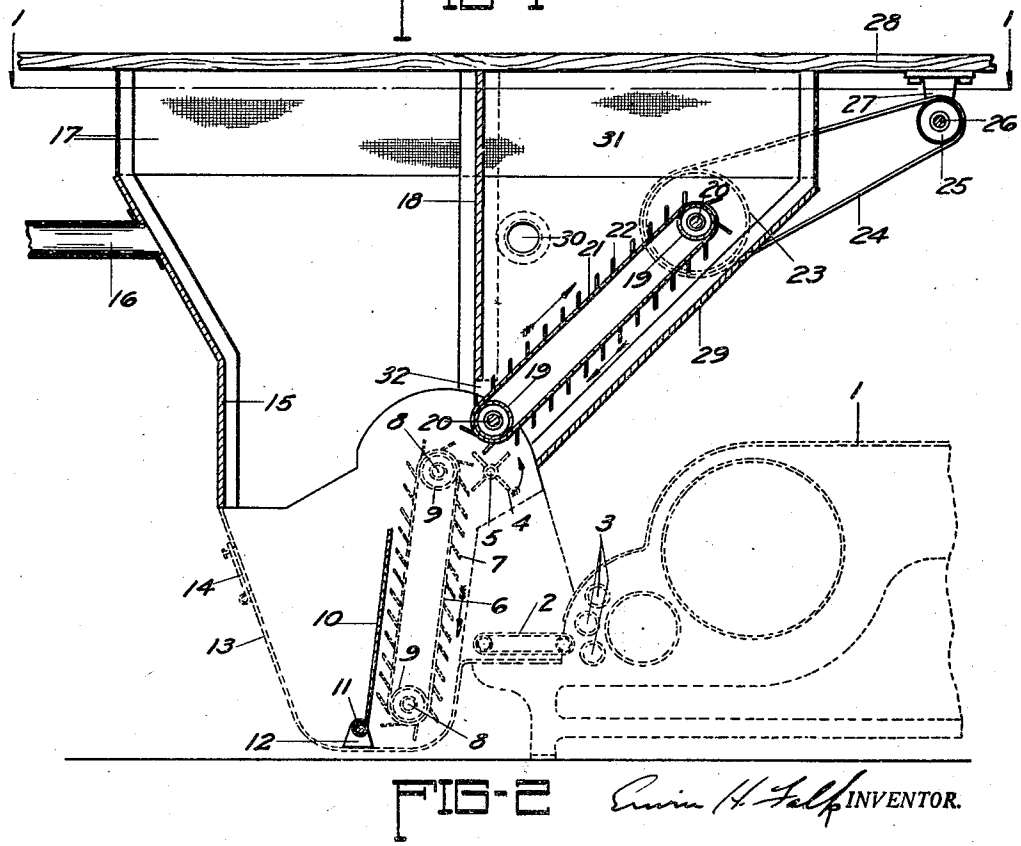

FIG-2

Erwin H. Falk INVENTOR.

Patented Nov. 20, 1928. 1,691,924

UNITED STATES PATENT OFFICE.

ERWIN H. FALK, OF DAVENPORT, IOWA.

MACHINE FOR MAKING MATTRESSES.

Application filed December 16, 1927. Serial No. 240,474.

My invention relates to improvements in garnetting machines and particularly to the apparatus for feeding into garnetting machines two or more different materials.

The objects of my invention are:

1. To provide means whereby two or more different kinds of material can be fed simultaneously to a garnetting machine in separate streams forming a continuous broad layer, one portion of which shall be of one kind of material and another portion of which shall be of another kind of material;

2. To provide means whereby a continuous sheet of one kind of material of the full width or the breadth of the machine can be fed to the garnetting machine with a comparatively narrow section of another kind of material intermingled therewith;

3. To provide a superior filler for mattresses comprising a body largely of laminated cotton, but having interposed between various layers of the cotton, thin sheets of a combination of kapok and rayon, or of kapok, rayon and cotton in various proportions, or of kapok and other materials, the layers of such mixed materials being adapted to prevent packing, matting and bunching of the cotton and to maintain the resiliency of the entire filler for indefinitely long periods of time.

I attain these objects by the means illustrated in the accompanying drawings, in which,—

Figure 1 is a plan view of my device with the cover removed, being taken on the line, 1—1, of Figure 2;

Figure 2 is a vertical section on the line, 2—2, of Figure 1.

In the drawings 1 represents the ordinary garnetting machine which is well known and in common use and hence need not be described. 2 is the feed delivery apron which receives the material to be fed to the garnetting machine and carries it to the rolls, 3, of the garnetting machine, whence it passes through the machine in the ordinary way. 15 is the hopper or feed bin ordinarily used with garnetting machines and 16, the feed pipe through which the cotton to be garnetted is fed into the feed bin, 15.

6 represents the spiked apron in common use in the feed bin of garnetting machines, with spikes, 7, inclined outwardly as shown and which travel in the direction of the inclination, the spiked apron passing over rolls, 9, mounted upon shafts, 8, rotatably mounted in the bin, 15, and connected with suitable driving mechanism of any kind.

The spike-cleaner or stripper, 4, is mounted at the upper end of the spiked apron, 6, and parallel therewith upon a shaft, 5, which may be connected with any suitable driving mechanism.

The parts so far described are all in common use.

A division board or shield, 10, has its lower end pivotally mounted upon a rod or shaft, 11, mounted in suitable lugs, 12, secured to the bottom of the bin, 15, and is secured in a substantially vertical position parallel with the takeup side of the spiked apron, 6. The shield, 10, may extend to the full height of the spiked apron, 6; or may extend one-third, one-half, three-fourths or any other proportionate distance upward on the spiked apron.

When it extends to the full height of the apron, all the material of the bin will be held out of contact with the middle portion of the spiked apron, but when desired to allow a limited amount of cotton to be taken up by the middle portion, the shield may be reduced in length so that some of the cotton in the bin, 15, will come in contact with the middle portion of the spiked apron for a small portion of its upward travel.

An auxiliary bin or hopper, 29, is secured adjacent the feed bin or hopper, 15, and with the partition, 18, constitutes a common wall of each bin or hopper.

The bin, 29, may be of any desired width in proportion to the width of the principal feeding bin, but, for certain materials such as kapok or a mixture of kapok and rayon, or kapok, rayon and cotton, I prefer to have the bin, 29, of a width approximating one-third of the total width of the feed bin, 15.

A feed pipe, 30, enters the bin, 29, through which kapok, rayon, cotton or other desired material may be fed by a blast of air or other suitable means, into the bin, 29. When a blast of air is used to feed the bins, 15 and 29, the upper portion of each, 17 and 31, respectively, is preferably formed with sides of bagging, jute, or a loose fabric of some kind, which will permit the air to escape while retaining the cotton, kapok, rayon or other material.

The bottom of the bin, 29, is preferably

formed on an angle of approximately 45 degrees and has a spiked feed apron, 21, passing around a pair of rollers, 19, mounted upon transverse shafts, 20, which are secured in suitable bearings in the sides of the bin, 29, with a drive pulley, 23, secured to the upper shaft, 20, which may be driven by a belt, 24, from a drive pulley upon a shaft, 26, or other suitable means.

The spikes upon the apron, 21, are inclined upwardly on the upwardly moving portion of the apron as shown by the arrows. It is obvious that the stripper, 4, being mounted close to the lower end of the apron, 21, will strip the teeth, 22, of the material which they pick up in their upward movement in the bin, 29, and carry downwardly over the upper roll, 19, and that as the material falls from the stripper, 4, it will lie upon the upper face of the delivery apron, 2, and be carried to the rolls, 3.

In the practical use of my device, I have found that the resiliency of a mattress filler may be greatly improved by embodying therein a mixture of kapok and rayon or of kapok, rayon and cotton to form the middle portion of the sheet as it leaves the garnetting machine and that when it is desired to form the middle portion of the garnet sheet from kapok alone or other materials, the apparatus described herein forms a superior means for feeding the kapok to the garnetting machine and will secure a more even distribution thereof than any other means heretofore in use of which I am aware. In attempting to feed kapok through the hopper, 15, by dividing same by vertical partitions as has heretofore been done, it is necessary to feed the kapok by hand through an opening in the front of the bin, 15, which I have shown closed by the cover plate, 14, and when so fed, it is impossible to secure an even feed of the kapok upon the apron, 6, and its spikes, 7, because the kapok will roll and bunch and bridge, while with the form and inclination of spiked apron shown in the bin, 29, it is impossible for the kapok or other material to get away from the spiked apron.

The inclination of the bottom of the hopper, 29, and of the spiked apron, 21, may be varied to meet the practical requirements of the different kinds of material; and the length and form of the spikes, 22, may be varied as required.

In the operation of my device, the bin or hopper, 15, is charged with cotton through the air blast pipe, 16, and the bin, 29, is charged or loaded with kapok, or with kapok and rayon or with kapok, rayon and cotton or such other mixture as may be desired. The machinery is then started and the spiked apron, 6, carries cotton at approximately its outer thirds over to the stripper, 4, which strip it from the spikes, 7, and throw it down onto the delivery apron, 2, and at the same time the apron 21, with its spikes, 22, travels upwardly against the lower surface of the kapok or the mixture with which the bin, 29, is charged and carries limited portions thereof over the upper roll, 19, and down to the stripper, 4, which strips it from the spikes, 22, and it falls approximately upon the middle third of the delivery apron, 2. As the material runs through the garnetting machine in straight lines, the sheet ultimately formed as it passes from the garnetting machine has approximately its middle one-third formed from the material fed into the hopper, 29, and its outer thirds formed from the material fed into the hopper, 15, and as the sheet is taken off in oblique lines under the present practice in such machines, the material comprising the middle one-third combines into a distinct layer imposed between two layers of the material fed from the hopper, 15. Such takeoff devices having been in common use for many years, are not included within this application.

It is obvious that as the material passes from the garnetting machine, approximately the outer lateral two-thirds of the sheet as it leaves the garnetting machine, will be composed of the material fed from the hopper, 15, while approximately the middle one-third of it will be composed of the material fed from the hopper, 29.

Various modifications in the size and proportions of the various parts of my device and the length of the shield, may be made without departing from the spirit of my invention.

I claim:

1. In a machine for making mattress fillers, the combination of two hoppers in each of which there is a feeding conveyor for delivering filler stock at a common, given point, the conveyor in one hopper being provided with a shield for preventing access of the material to a portion of the conveyor corresponding in width and location to the stream of material fed by the conveyor in the other hopper.

2. In a feeding apparatus for garnetting machines, the combination of two hoppers in each of which there is a feeding conveyor for delivering material at a given common point, the conveyor in one hopper being provided with a shield for preventing access of the material to a given portion of the apron to the end that material fed by the conveyor or apron in the other hopper will deliver material in such a manner as to fill in the vacant portion and produce a complete lap to be fed to the garnetting machine.

3. A feeding apparatus for garnetting machines comprising a wide hopper and a narrow hopper having conveyors therein arranged to deliver mattress stock to the garnetting machine in adjacent paths in a given, common plane, the conveyor in the wide hop-

per being provided with a shield for preventing access of stock to the portion of such conveyor opposite to the conveyor in the narrow hopper.

4. A feeding apparatus for garnetting machines comprising a plurality of hoppers each having a conveyor therein arranged to deliver stock to the garnetting machine in adjacent paths, the conveyor in one of the hoppers being shielded to prevent access of stock to the conveyor therein in the path of the conveyor of another hopper.

In testimony whereof he affixes his signature.

ERWIN H. FALK.