Nov. 5, 1940. H. M. SANDERS 2,220,733

TRANSFORMER AND METHOD OF MAKING THE SAME

Original Filed Jan. 25, 1938 4 Sheets-Sheet 1

Fig. 1.

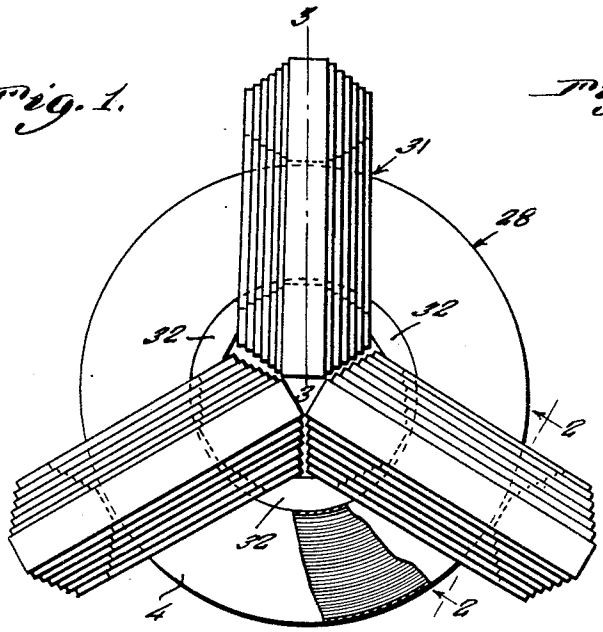

Fig. 4.

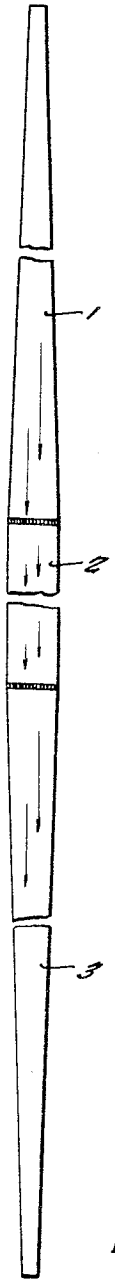

Fig. 2.

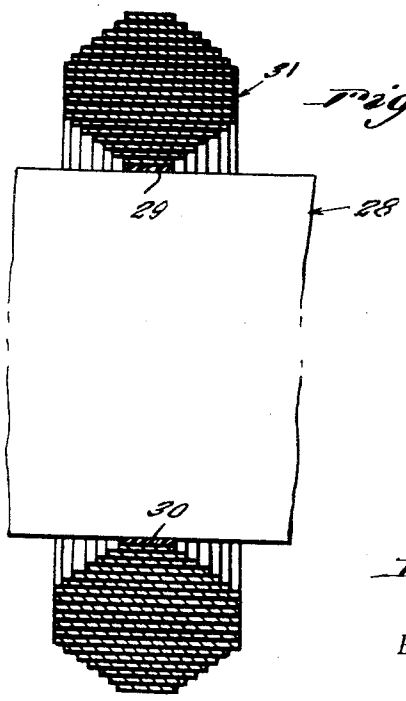

Inventor

Homer M. Sanders

By Harry E. Dunham

Attorney

Nov. 5, 1940. H. M. SANDERS 2,220,733

TRANSFORMER AND METHOD OF MAKING THE SAME

Original Filed Jan. 25, 1938 4 Sheets-Sheet 2

Fig. 3.

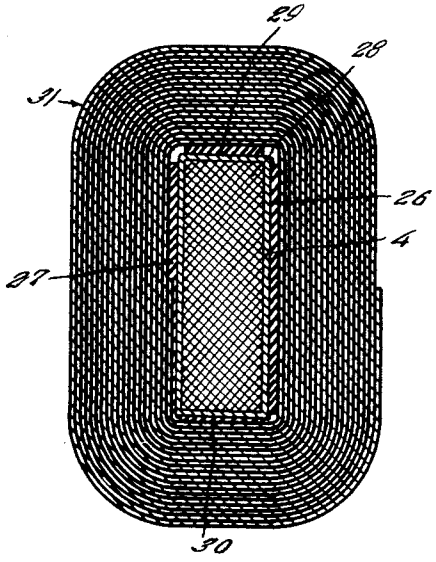

Fig. 8.

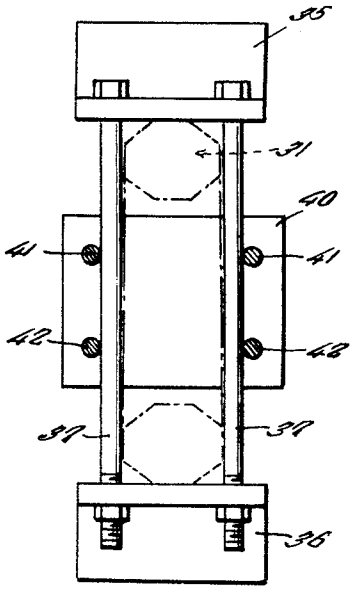

Fig. 7.

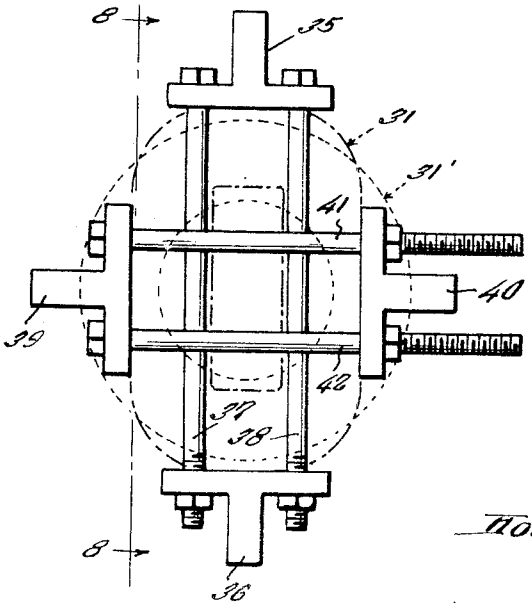

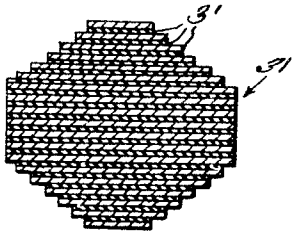

Fig. 5.

Inventor

Homer M. Sanders

By Harry C. Dunham

Attorney

Nov. 5, 1940. H. M. SANDERS 2,220,733

TRANSFORMER AND METHOD OF MAKING THE SAME

Original Filed Jan. 25, 1938 4 Sheets-Sheet 3

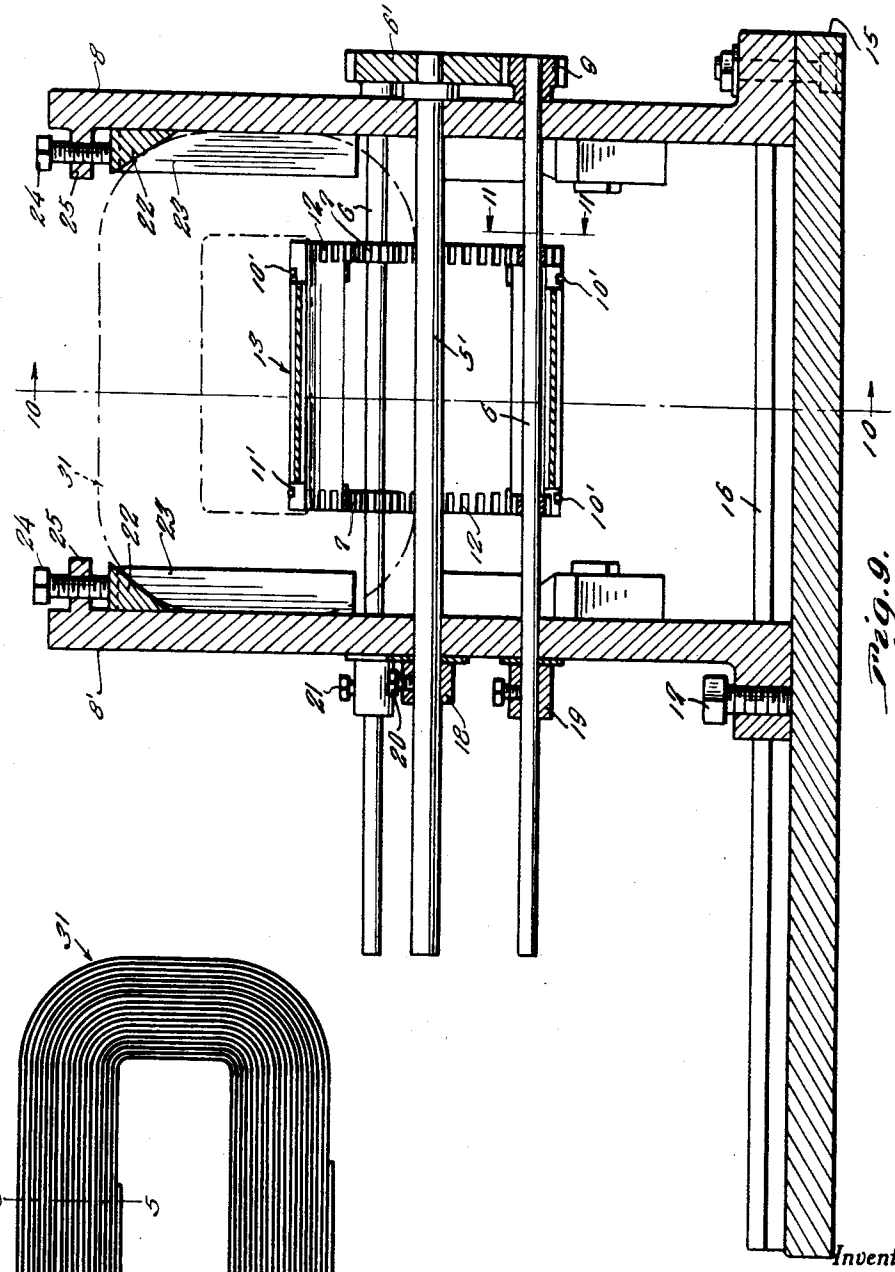

Fig. 9.

Fig. 6.

Inventor

Homer M. Sanders

By Harry C. Durham

Attorney

Nov. 5, 1940. H. M. SANDERS 2,220,733

TRANSFORMER AND METHOD OF MAKING THE SAME

Original Filed Jan. 25, 1938 4 Sheets-Sheet 4

Fig. 10.

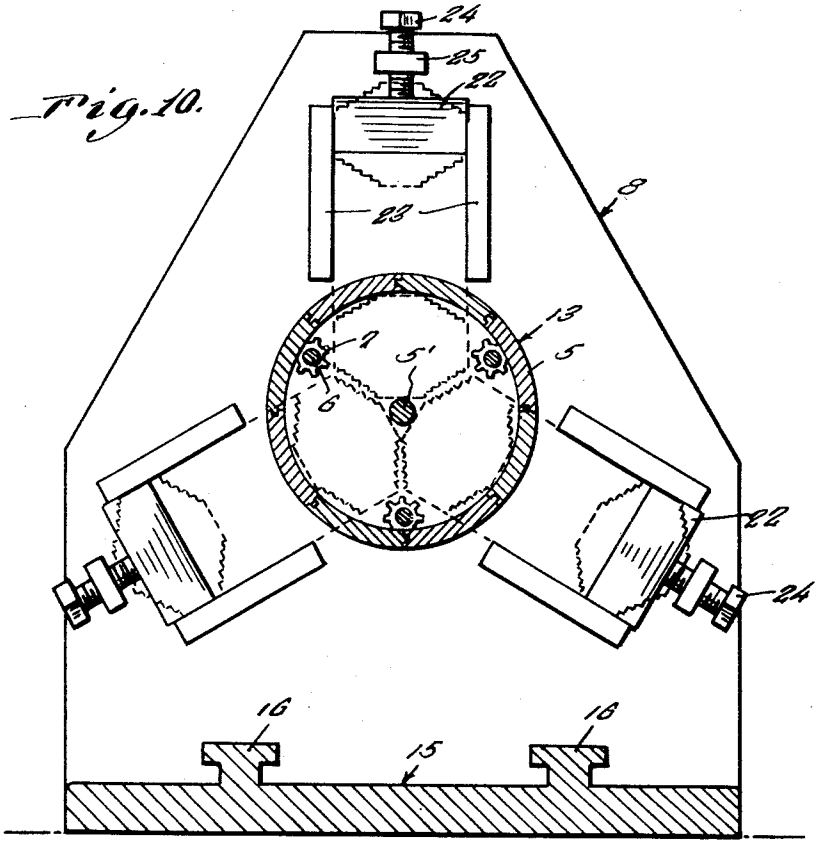

Fig. 12.

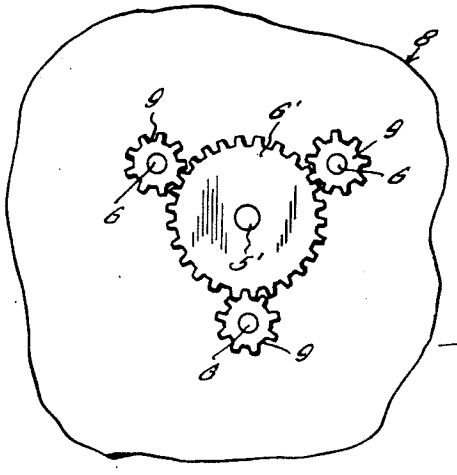

Fig. 11.

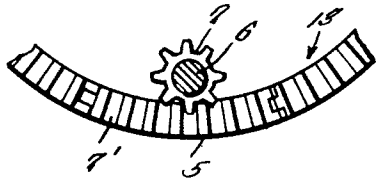

Inventor

Homer M. Sanders

By Harry E. Dunham

Attorney

Patented Nov. 5, 1940 2,220,733

UNITED STATES PATENT OFFICE

2,220,733

TRANSFORMER AND METHOD OF MAKING THE SAME

Homer M. Sanders, Sharon, Pa., assignor to General Electric Company, a corporation of New York

Original application January 25, 1938, Serial No. 186,895. Divided and this application December 14, 1938, Serial No. 245,733

3 Claims. (Cl. 175—356)

This application is a division of my co-pending application Serial No. 186,895, filed January 25, 1938, and assigned to the same assignee as the present application.

My invention relates in general to inductive electrical apparatus having continuous magnetic circuits, and particularly to electrical transformers, and the method of producing the same, and important objects of the invention are, to improve the electrical and magnetic circuits of continuous core inductive electrical apparatus; to facilitate the assembly of the laminations constituting the magnetic circuits; and the application of the coils and insulation constituting the electrical circuits in proper relation to the assembled cores.

It is a further important object of the present invention to provide magnetic and electrical circuits of reduced weight and improved performance as compared to known transformers or the like apparatus of equal ratings.

It is also an object of the present invention to provide a novel method of assembling laminations from continuous steel strip rolled into a closed magnetic loop or core, and to provide facilities for application of the coils and the insulation of the electrical circuit within the symmetrical closed magnetic loops thus formed.

Another important object of the present invention is to simplify the structure and shape of the laminations constituting the magnetic circuit, and to eliminate excess material, labor and equipment required by present methods of core formation and application of coils and insulation.

Other important objects of my invention will be apparent from a reading of the following description taken in connection with the drawings, wherein for purposes of illustration I have shown preferred embodiments of my invention.

In the drawings Fig. 1 is a plan view of a transformer assembly produced in accordance with the present invention. Fig. 2 is a transverse vertical sectional view, enlarged, taken through Fig. 1 approximately on the line 2—2 and looking toward the left in the direction of the arrows. Fig. 3 is an enlarged transverse vertical sectional view taken through Fig. 1 approximately on the line 3—3. Fig. 4 is a plan view of one of the steel strips used in forming the continuous loop cores, and showing a portion of uniform width, merging into portions of tapering width at weld points, the grain running lengthwise in the said strip. Fig. 5 is an enlarged transverse vertical sectional view taken through Fig. 6 approximately on the line 5—5. Fig. 6 is a side or end elevational view of one of the loop cores showing the manner in which the same is spirally wound and showing its appearance after being pressed into the required shape. Fig. 7 is an end or side elevational view of a press employed in pressing the loop cores after winding, to assume the oval or rectangular shape illustrated in Fig. 6. Fig. 8 is a transverse vertical sectional view taken through Fig. 7 approximately on the line 8—8 and looking toward the right in the direction of the arrows. Fig. 9 is a longitudinal sectional view taken through the combined core section mounting device and coil winder, and showing a core section in place therein. Fig. 10 is a transverse vertical sectional view taken through Fig. 9 approximately on the line 10—10 and looking toward the right in the direction of the arrows. Fig. 11 is a fragmentary detail transverse vertical sectional view taken through Fig. 9 approximately on the line 11—11. Fig. 12 is an end elevational view looking from right to left in Fig. 9.

Referring in detail to the drawings, it will be apparent that in accordance with the present invention any desired core section may be produced, but for purposes of illutration, a polygonal-shaped core section, which gives the maximum cross section area for a given enclosing circle is shown. Strips of tapered width and strips of uniform width are employed selectively in proper combination to produce the desired core section. A strip of uniform width throughout its length will form a rectangular or square core section, while a polygonal-shaped core section, such as that shown herein, requires the utilization of two tapered elements designated 1 and 3, respectively, and one element designated 2, which is of uniform width, joined together in end to end relationship to form one continuous strip, with the grain of the metal running longitudinally. The resulting taper is not great, as will be understood from consideration of the final shape of the core section to be achieved, but this taper is gradual as indicated in Fig. 1 of the drawings.

In forming a magnetic core by the method of the present invention, the strips 1, 2 and 3 of magnetic steel are joined together by welding and then wound into an annular form of the required dimensions, by first passing the cold strip through a solid dielectric, of low melting point, such as paraffin, while said dielectric is in its liquid state so as to form a film on the cold strip, and so as to separate the resulting laminations and provide a lubricant to facilitate the process of formation, and then placing the coiled strip in a press such as shown in Fig. 7 of the drawings, to press and form into a rectangular shape. It is then placed in an annealing frame, also represented by the device shown in Fig. 7 of the drawings, to support it during the annealing of the formed cores.

At the beginning of the annealing process the dielectric of low melting point is drained off for

re-use, and this draining off produces a space for expansion in annealing and produces a space between the laminations when the form cools, for reception of a film of penetrating and hardening dielectric to flow between the laminations, so that in the same operation it is made possible to reduce the hysteresis losses by removing elastic stresses in the molecular structure, and to reduce eddy current losses by separating the laminations with dielectric 3'.

After the formed cores have been finished and tested, they are assembled and held together by suitable devices (not shown) such as clamps or steel wires, to maintain the symmetry of the leg or core on which the coils are to be applied. When the core section is clamped in the combined core section mounting device and winding device illustrated in Figs. 9 through 12, the core section is ready for application of the coils and insulation 4, by means of the collapsible winding form 13 which comprises the segments 5 banded together with wire 10' lying in circumferential grooves 11', the segments 5 being tongue and groove connected as shown in Fig. 10.

The segments 5 have rack teeth 7' formed at their opposite ends which form a circular rack 12 which is operatively engaged by the spur gears or pinions 7 which are fixedly mounted on the rotatable rods 6, the rotation of which produces rotation of the coil winding form 13.

The rotatable rods 6 are equally radially spaced from a stationary shaft 5' which is supported by passing through the stationary support 8 and the adjustable support 8', alongside of the rods 6 which turn in the elements 8 and 8'. Mounted on the right hand end of the shaft 5' is the idler gear 6' which is meshed with the pinions 9 which are fastened to the projecting ends of the shafts 6, whereby all of the shafts 6 are rotated at the same speed when a crank or other rotating mechanism is applied to any one of the shafts 6, for rotating the coil form 13 at the desired speed and in the desired direction. As shown in Fig. 9 of the drawings, the support 8 is stationary with the base 15 and this base is provided with a pair of tracks 16 with which slidably engage the openings in the lower part of the adjustable support element 8', which part of the support 8' is equipped with a clamping bolt 17 to be turned down against the top of the base to lock the support element 8' in the adjusted position on the base, suitable to accommodate the length of the core sections and coil forms to be wound. Of course, the stops 18 on the shaft 5' and 19 on the shafts 6 are provided with clamping bolts 20 and 21, respectively, to enable adjustment of the stops along the respective shafts to accommodate the adjustment of the support 8'.

On the facing sides of the respective supports 8 and 8' and arranged in number and position in accordance with the number and arrangement of the core sections to be mounted and wound, are the holding blocks 22 which slide between pairs of guides 23 and are held in position by adjustable bolts 24 which are threaded in lugs 25 on the sides of the support elements, the working faces of the blocks 22 being shaped to conform generally with the portion of the core sections to be engaged. In the present instance, three of the arrangements just described are provided to accommodate the three core sections employed in the illustrated example, and these are equally spaced angularly and will be adjusted to cause the blocks 22 to be at equal radial distances from the center of the shaft 5', so that the core sections engaged by the facing pairs of holders will be properly positioned relatively to each other for the winding operation. The arrangement of the core sections around the shaft 5' and the manner in which these sections are clamped toward the center of the arrangement by the blocks 22 and bolts 24 is more readily observable from Fig. 10.

With the core section in place in the combined core section mounting and winding device as described, and with the coil form 13 rotated at the proper speed, and with the proper wire fed around and along the form 13, by paying the wire from a suitable reel or the like (not shown) the coil will be wound on the form 13, whereupon the wires 10' are cut and withdrawn, so as to permit removal of the winding drum segments 5. When the segments have been removed, the insulated fillers 26 and 27 (Fig. 3) are put into place between the formed coil 28 and the lengthwise surfaces of the opening of the core section. Similarly, insulated fillers 29 are inserted at one or both ends of the core opening between the coil 28 and the inner surface of the core. In this manner the coil, including its insulation envelope 4, is assembled with the core sections, and the assembly is made rigid. The insulation envelope 4 may be in any desired form. For example, in accordance with common practice it may consist of a toroidal wrapping of varnished cambric tape applied to the coil 28 by winding such tape around the bundle of wires forming the coil and proceeding progressively around the coil, the successive turns of tape being suitably lapped. It will be necessary, of course, to perform the wrapping operation at an exposed portion of the coil 28 between core sections and to turn the coil in the core windows gradually until tape has been wrapped along the entire periphery of the coil 28. The insulated fillers 26 and 27 are obviously not put in place until the tape wrapping 4 has been applied, as the fillers 26 and 27 not only serve as additional insulation but also help to hold the coil 28 in a fixed position. Owing to the fact that the core strip material is tapered toward both ends, the core section 31 of the core has its outer and inner strip turns progressively narrower than the median strip turns, that is has the cross-sectional shape of a geometric figure, the sides of which are slanting or inclined with the width of cross-section decreasing towards the ends of the cross-section so that, as shown in Fig. 1, the cores may be fitted closely together and into the coil window in order to obtain a high space factor of the magnetic material, that is, so as to make the cross sectional area of the core material a relatively high fraction of the cross sectional area of the opening or window in the conductive winding structure or coil 28. The necessary wedges 32 are then installed between the inner periphery of the coil 28 and the two adjacent core sections as illustrated in Fig. 1 of the drawings. Figs. 2 and 3 show particularly the arrangement of the fillers. It is to be noted that the segments 5 forming the winding form 13 have slots in the ends thereof and opening into the grooves 11' to facilitate cutting of the wires 10' therein in the operation of collapsing the winding form. Such slots consist of the spaces between the teeth 7' of the rack 12, for as shown in Fig. 11 these spaces extend through the segments 5 of the winding form 13.

In the present general transformer practice followed by all manufacturers, the magnetic circuit

consists of I, L, or E-shaped laminations punched or sheared from large sheets of metal assembled in various forms with both single and multiple circuits, and from formed strips assembled concentrically with the ends overlapping, all functioning in the same general way, which is to form a closed loop or flux path around a coil placed on a part of the same which is called the core, while the other parts are designated as outer legs or as a yoke. In any case there is at least one, and in most cases there are two to four breaks in each individual lamination circuit, each adding to the total reluctance of the path.

By the use of continuous core loops or sections each wound from continuous strips, these joints are eliminated as well as other undesirable features, and it is made possible to use cylindrical coils which provide the shortest mean turn of copper and a more perfect winding with greater facility. Absence of these joints also eliminates magnetic hum or noise. Furthermore, the loops can be annealed and core loss tests made before applying the coils and insulation, thereby assuring uniform performance within close limits. The composite result of these provisions is a reduction in size, weight, and losses for a given core, coil and insulation combination, affording the designer a means of maintaining performance with an appreciable reduction in size and weight and a more symmetrical, uniform and rugged product.

Obviously, for a given core section and coil space, the weight of iron, copper, and insulation is reduced appreciably, and waste encountered in customary practice is entirely eliminated. Expensive dies or special equipment for stamping or cutting laminations are not required in the present invention, and it is, therefore, possible to use laminations of maximum thickness within the limits imposed by eddy current conditions and maximum content of elements such as silicon or nickel for improvement of magnetic properties. Furthermore, it is possible to gain satisfactory results with less material or better results with the same material heretofore used for a given rating. The time saved in core assembly more than compensates for any extra time required for coil and insulation application. Also, the coils may be removed and rewound without dismantling the core in case of trouble requiring repairs.

The combined forming clamp and annealing frame shown in Figs. 7 and 8 comprises essentially the top and bottom members **35** and **36** which are connected by the clamping rods **37** and **38** which are adjustable to produce the desired clamping action against the ends of the core section, the core section in its annular form being designated by the numeral **31'** in Fig. 7, wherein it is shown in dotted lines. Between the elements **35** and **36** are the elements **39** and **40** which are traversed by clamping rods **41** and **42** which like the clamping rods **37** and **38** are arranged in pairs on opposite sides of the core section, with the pairs of rods **41** and **42** located outside of the pairs of clamping rods **37** and **38**, as shown in Fig. 7 of the drawings. The dotted lines designated **31** show the final shape of the core section as affected by the proper operation of the clamping rods.

Although I have shown and described herein preferred embodiments of the invention, as a transformer, and as apparatus for producing the same, and as a procedure for achieving such a transformer, it is to be definitely understood that I do not desire to limit the application of the invention thereto, but any change or changes may be made in the materials and in the structure and arrangement of parts, as well as in the sequence and duration of operation concerned, within the spirit of the invention and the scope of the subjoined claims.

What I claim as new and desire to secure by Letters Patent of the United States is:

1. A method of making an inductive unit for a transformer or the like, said unit having a continuous magnetic circuit and a continuous electrical circuit, said method comprising supporting at least two closed loop core sections in radial, circumferentially spaced positions with one side of each core section disposed adjacent the center of an imaginary circle with relation to which the core sections are supported, and then winding a continuous wire through said core sections and around said one side thereof by providing and rotating a coil form encircling said one side of the core sections while paying out the wire onto the coil form, then removing the coil form when the coil is made and assembling the coil with relation to the said one side of the core sections.

2. A method of making an inductive unit for a transformer or the like, said unit having a continuous magnetic circuit and a continuous electrical circuit, said method comprising supporting at least one closed loop core section with one side disposed adjacent the center of an imaginary circle, and then winding a continuous wire through said core section and around said one side thereof by providing and rotating a coil form encircling said one side of the core section while paying out the wire onto the coil form, then removing the coil form when the coil is made and assembling the coil with relation to the said one side of the core section.

3. In combination at least three closed loop core sections, and a substantially circular coil wound through the core sections and around an inner side of each core section, the inner sides forming a central core leg within the coil, said core sections each being of substantially annular form and having a cross-section shaped to decrease in width towards the ends of the cross-section, said core sections each being composed of a substantially continuous magnetizable strip tapered in width toward both ends and wound upon itself to provide outer and inner strip turns progressively narrower than the median strip turns, the said core sections being radially arranged and circumferentially spaced, with the said inner sides interfittingly juxtaposed within the coil so that their outward surfaces roughly conform to the inner surface of the coil, whereby relatively high space factor of the core material within the coil is obtained, and the cross-sections of said core sections being substantially the same around the periphery of the annular core sections, whereby substantially uniform flux density is obtained around the periphery of the core sections to provide most efficient utilization of the core material and minimum losses.

HOMER M. SANDERS.