July 27, 1965 D. E. WINGFIELD 3,197,695

CONTINUITY PROGRAMMING DEVICE HAVING PLURAL STEPPING SWITCHES STEPPED IN RESPONSE TO CONTINUITY BETWEEN CORRESPONDING CONTACTS OF SAID SWITCHES

Filed Nov. 2, 1961 4 Sheets-Sheet 1

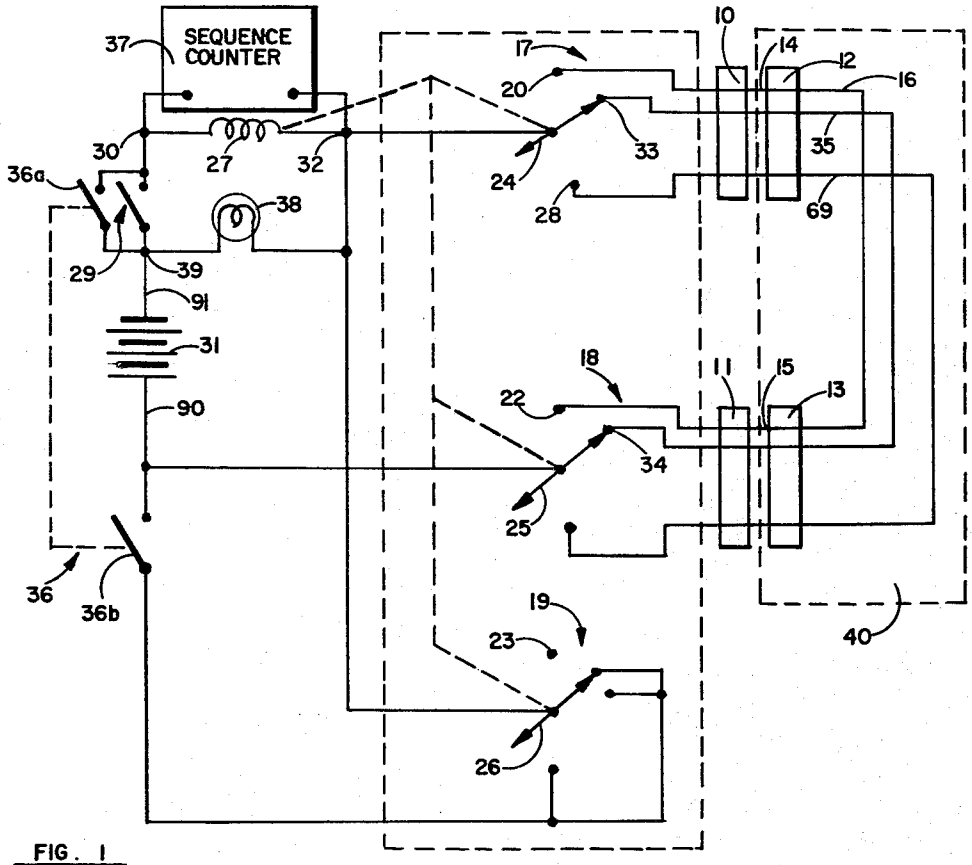

FIG. 1

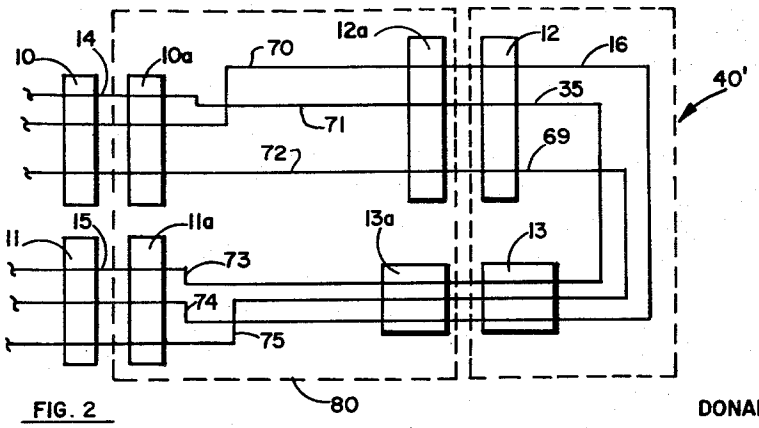

FIG. 2

INVENTOR.
DONALD E. WINGFIELD

BY

Allan Rothenberg

ATTORNEY

July 27, 1965 D. E. WINGFIELD 3,197,695

CONTINUITY PROGRAMMING DEVICE HAVING PLURAL STEPPING SWITCHES STEPPED IN RESPONSE TO CONTINUITY BETWEEN CORRESPONDING CONTACTS OF SAID SWITCHES

Filed Nov. 2, 1961 4 Sheets-Sheet 2

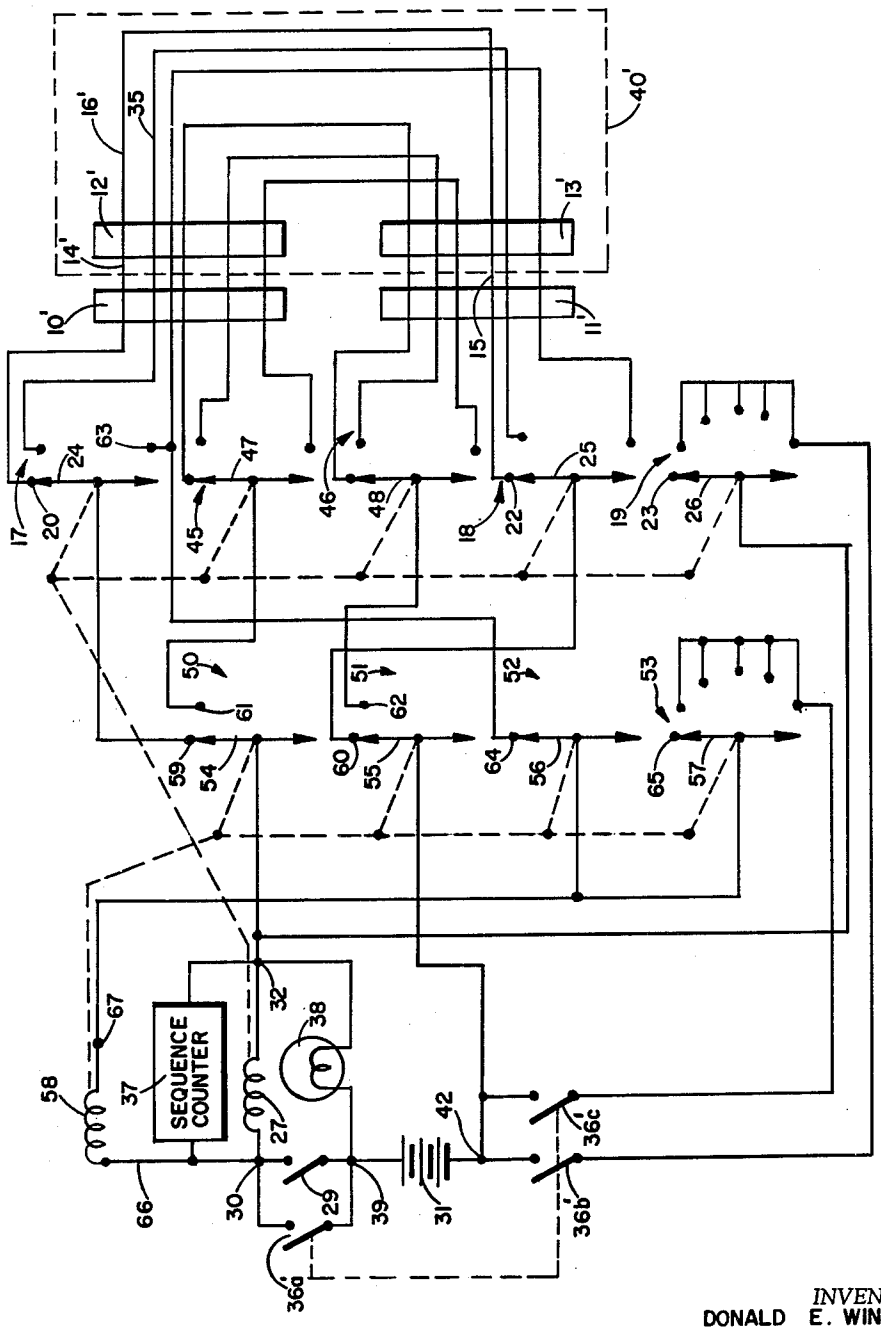

FIG. 3

INVENTOR.
DONALD E. WINGFIELD

BY
Allan Rothenberg
ATTORNEY

July 27, 1965 D. E. WINGFIELD 3,197,695

CONTINUITY PROGRAMMING DEVICE HAVING PLURAL STEPPING SWITCHES STEPPED IN RESPONSE TO CONTINUITY BETWEEN CORRESPONDING CONTACTS OF SAID SWITCHES

Filed Nov. 2, 1961 4 Sheets-Sheet 3

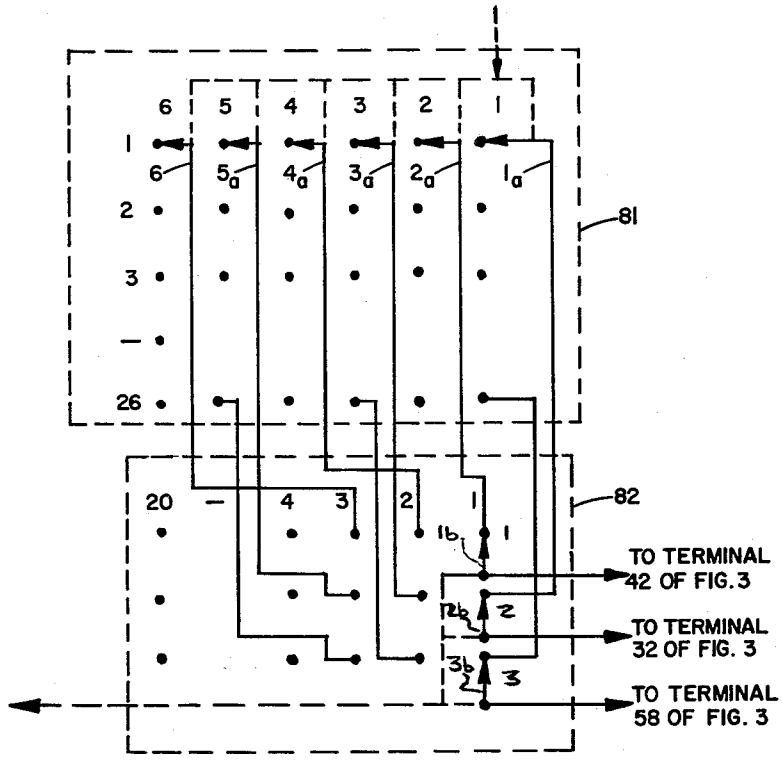

FIG. 4

INVENTOR
DONALD E. WINGFIELD

BY

Allan Blattenberg

ATTORNEY

July 27, 1965 D. E. WINGFIELD 3,197,695

CONTINUITY PROGRAMMING DEVICE HAVING PLURAL STEPPING SWITCHES STEPPED IN RESPONSE TO CONTINUITY BETWEEN CORRESPONDING CONTACTS OF SAID SWITCHES

Filed Nov. 2, 1961 4 Sheets-Sheet 4

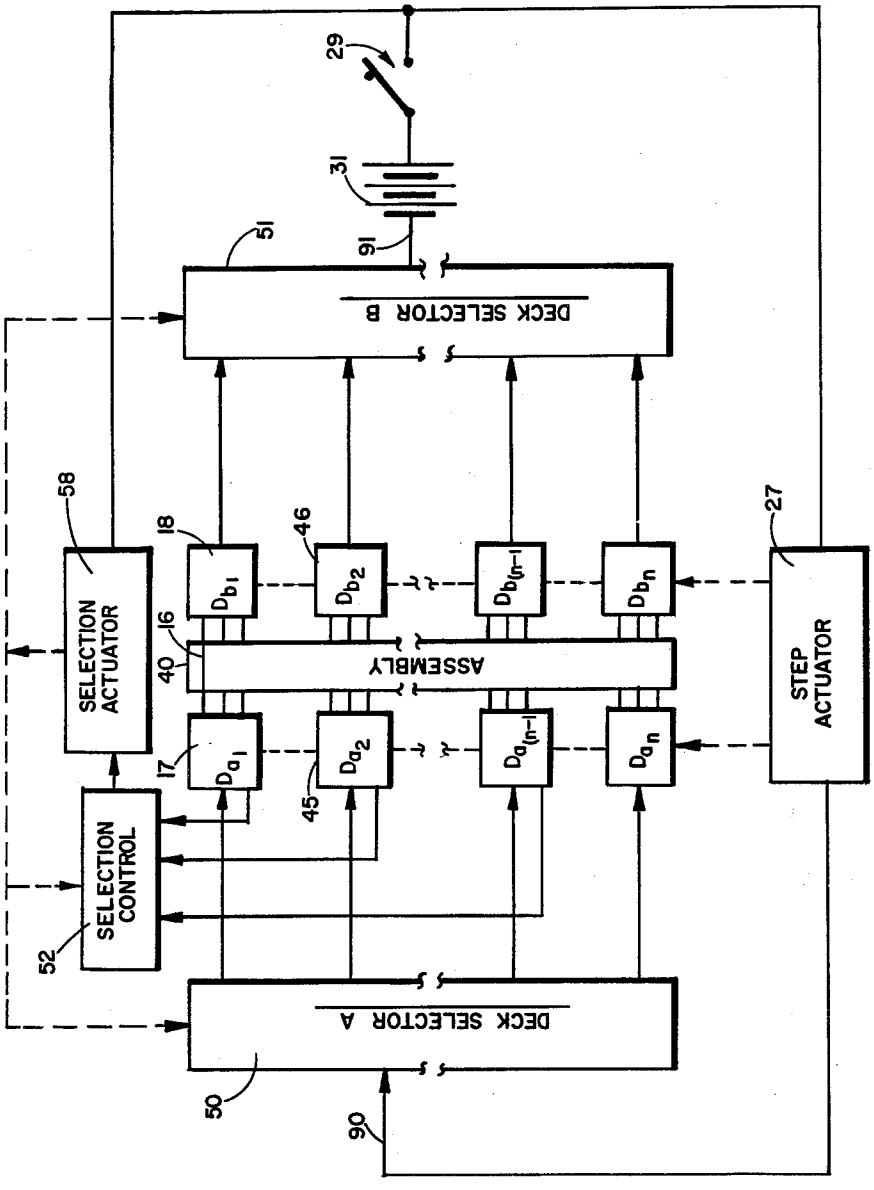

FIG. 5

INVENTOR.
DONALD E. WINGFIELD

BY

Allan Rothenberg

ATTORNEY

United States Patent Office 3,197,695 Patented July 27, 1965

3,197,695

CONTINUITY PROGRAMMING DEVICE HAVING PLURAL STEPPING SWITCHES STEPPED IN RESPONSE TO CONTINUITY BETWEEN CORRESPONDING CONTACTS OF SAID SWITCHES

Donald E. Wingfield, Artesia, Calif., assignor to North American Aviation, Inc.

Filed Nov. 2, 1961, Ser. No. 149,737
7 Claims. (Cl. 324—51)

This invention relates to a device for checking circuit continuity, and more particularly to a device for automatically programming the continuity checking of circuits

The complexity and size of many current electronic systems requires the design and use of many equipment modules and consoles in a single integrated installation, each component console of which is interconnected with a cooperating console or module by means of a multi-conductor cable having a multi-terminal connector at either end. In the large scale production and preventative maintenance of such complex systems, efficient means are required for reliably checking-out the circuit connections of such multi-terminal connectors and multi-conductor cables to assure that they are properly connected. Past production techniques have employed wiring lists and charts for instructing factory personnel on the wiring of cable harnesses of multiple conductors to multiple terminal connectors, and have employed automatic check-out equipment to check-out the completed wiring of the cable harnesses and connectors only after the completion of a given cable harness set by the wireman or factory worker.

Such a production technique appears to allow each step of the production work flow to proceed at a maximum rate, e.g., the wireman proceeds without interruption, and the subsequent check-out process proceeds uninterrupted by means of high speed automatic check-out equipment employing circuit continuity indicators. However, if and when a wiring error is subsequently found by aid of the automatic testing, then one must determine the code indication of the erroneous connection indicated by the test equipment, and then spend a great deal of effort to identify and physically locate the actual wire connection indicated by the code from among the many other connections present, effect a repair, and retest the assembly in order to verify that the desired repair was properly made and that no other additional damage was suffiered in effecting the repair. Further, the difficulties involved in locating the wire connection of interest and making a repair are aggravated because of the usually decreased access available upon completion of the wiring operation. In other words, many times it is more difficult to fix a wiring job than it is to undertake to start a wiring job anew. Therefore, it is a broad object of this invention to provide means for both indicating a particular wiring procedure or step of a wiring sequence or program, and then subsequently checking the result of such work step before programming the next step in sequence.

In carrying out the principles of this invention in accordance with a preferred embodiment thereof, there is provided a pair of multi-terminal standard plug receptacles for receiving connectors to be wired and tested, the connectors having terminals between which wiring is to be connected. Also provided are stepping switch means cooperating with the standard plug receptacles for connecting a source of electrical current to successive preselected pairs of programmed terminals to be wired, a first indicator responsive to the stepping switch means for indicating a pair of terminals to be wired, and a second indicator in cooperation with said stepping switch means and pair of standard plug receptacles for indicating the existence of electrical continuity between a selected pair

of terminals. Control means for operating the stepping switches is arranged in cooperation with said switches and pair of plugs such that such control means cannot be operated for subsequent programming of further wiring and whereby further testing procedures cannot be conducted until the immediately preceding step of the program has been properly performed.

By means of the above described arrangement, the operator or wireman may operate the control means only one step at a time and in the desired sequence to obtain an indication of which sequence of wiring operations is to be performed. The operator further receives an indication as to whether the desired connection or wiring step of the sequence has been properly performed, and cannot cause the device of the invention to function and test a subsequent step or sequence until the present wiring step of the program has been properly performed. In this way, the work of the wireman is automatically programmed, concurrently checked, and proceeds at a rate dictated by the wireman himself.

Because the work sequence is programmed, a program can be selected or established for optimum access, ease and convenience in the performance of each of the wiring operations. Further, because the control means cannot be made to operate and program a subsequent sequence unless continuity exists between a presently programmed preselected pair of terminals, the performance of the wireman tends to be self-checking.

Accordingly, it is an object of the device of this invention to provide means for programming a sequence of wiring operations between preselected wiring terminals.

It is another object of the device of this invention to provide means for indicating the existence of the circuit continuity between a preselected pair of wiring terminals.

It is a further object of the device of this invention to provide means for programming a preselected sequence of preselected pairs of terminals and indicate the existence of circuit continuity between each preselected pair of terminals.

It is yet a further object of the device of this invention to provide a substantially error proof method and apparatus for wiring of electrical equipment.

It is still another object to provide means for indicating the existence of circuit continuity between a preselected pair of terminals of a programmed sequence of preselected terminal pairs, and preventing the further programming of subsequent preselected terminal pairs upon the failure of an indication of such circuit continuity.

These and other objects of the invention will become apparent from the following description taken in connection with the accompanying figures in which:

FIG. 1 is an illustration of an exemplary embodiment of the the principles of the invention.

FIG. 2 is an illustration of an adapted cable assembly for use with the device of FIG. 1.

FIG. 3 is an illustration of a preferred embodiment of the invention.

FIG. 4 is an illustration of the switching matrix interconnection between the stepping switches of FIG. 2.

FIG. 5 is an illustration of a system employing the device of FIG. 4.

In the figures, like reference characters refer to like parts.

Referring to FIG. 1, there is illustrated an exemplary embodiment of the principles of the invention. There is provided a pair of multi-terminal standard plug receptacles 10 and 11 for receiving connectors 12 and 13 respectively to be wired and tested, a terminal on one and a corresponding terminal on the other of the standard plug receptacles comprising a preselected pair of terminals. For example, terminal 14 on receptacle 10 corresponds to terminal 15 of receptacle 11 between

which a connecting conductor 16 is to be installed according to the method and apparatus of this invention, whereby terminals 14 and 15 comprise a preselected pair pair of terminals.

There is also provided a multi-deck stepping switch for connecting a source of potential across successive preselected pairs of terminals of a programmed sequence of preselected pairs. Such stepping switch is of a type well-known in the telephone switching art, for example, and is comprised of at least three like decks of similarly arranged switching contacts, including a first pair of first and second decks 17 and 18 and a homing deck 19, a corresponding switching contact on each of said decks comprising a single set of switch contacts. For example, contacts 20, 22 and 23 on decks 17, 18 and 19 respectively comprise a single set of switch contacts. Each of decks 17 and 18 has a number of contacts each connected to a terminal of its corresponding standard plug receptacle. For example, contact 20 of deck 17 is connected to terminal 14 of plug 10 and contact 22 is connected to terminal 15. Also included are ganged swingers equal in number to the number of decks and each associated with a corresponding deck. The swingers include at least a first, second and homing swinger 24, 25, and 26 associated with decks 17, 18 and 19 respectively. A two-terminal control coil 27 (in cooperation with a ratchet mechanism not shown) is employed for incrementally unidirectionally driving the swingers in unison to successive sets of switch contacts. The sets of switch contacts are almost semi-circularly arranged such that when one extremity of a swinger (say swinger 24) is in contact with the last switch contact (contact 28) of the associated deck (deck 17) that the opposite extremity is not engaged with the first switch contact of that deck (contact 20) and cannot be made to engage such contact without disengaging the first extremity of the swinger from the last switch contact (contact 28). In other words, a swinger is made to touch a single switch contact of the associated deck to the mutual exclusion of other contacts associated with that deck. Hence, in the step-by-step unidirectional operation of the swinger by means of control coil 27, each successive switch contact on a given deck is engaged in a cyclical manner. For example, contact 20 of deck 17 is engaged by swinger 24 and contact 28 is disengaged upon the incremental step motion of swinger 24 in a clockwise direction as shown in FIG. 1.

A control circuit is comprised of a step control switch 29 interposed between one terminal 30 of control coil 27 and a source of potential 31 for operation of the stepping switch, the connection of first swinger 24 to a second terminal 32 of control coil 27, and the connection of second swinger 25 to potential source 31. However, the control circuit is completed for a given switch contact position of the swingers only by the existence of circuit continuity between corresponding pairs of terminals for connectors 12 and 13 occurring by means of the proper connection of the conductor associated with such terminal pair. For example, for the position illustrated in FIG. 1 for swingers 24 and 25, engaging contacts 33 and 34 respectively, control coil 27 will be energized upon closing switch 29 only if conductor 35 is properly connected, thereby providing circuit continuity between switch contacts 33 and 34. Upon the energizing of coil 27, ganged swingers 24, 25 and 26 will be made to move in a clockwise direction to engage the next succeeding set of contacts. If such continuity were not present, the swingers would not move.

There is also provided in the arrangement of FIG. 1 a multi-pole homing switch 36 having at least a first and second pole 36*a* and 36*b*. The first pole or switch unit 36*a* is connected in parallel with control switch 29 and the second pole or switch unit 36*b* is adapted for commonly connecting all but first contact 23 of the switching contacts of homing deck 19 to a second terminal of potential source 31. Homing swinger 26 is connected to second terminal 32 of control coil 27. The purpose of the homing deck and its associated circuit is to provide automatic means for returning the swingers of the stepping switch to an index reference or home position upon the completion of a test sequence. Such return is effected by further unidirectional stepping action of the stepping switch, as will be explained more fully hereinafter.

There is further provided a sequence indicator 37 connected in parallel circuit with control coil 27 for providing a visual indication of the particular set of switching contacts engaged by the swingers at a given time. Such sequence counter may be an electromagnetically-actuated Veeder-Root counter or other means well-known in the art for counting sequences. Further, the counting device will automatically recycle upon the unidirectional indexing or homing of the stepping switch. Alternatively the indicator is capable of being reset manually by an operator.

A continuity indicator 38 is connected across the input terminal 39 of step control switch 29 and second terminal 32 of control coil 27 for indicating the existence of electrical circuit continuity between first and second swingers 24 and 25 when switch 29 is open.

In operation of the device described and illustrated in FIG. 1, control switch 29 is opened and homing switch 36 is closed. If the swingers are at the position of the first set of contacts (e.g., in the index or home position engaging contacts 20, 22 and 23), then control coil 27 is not energized and no stepping switch action occurs. If the swingers are not at the index position (as shown in FIG. 1), then control coil 27 will be energized, the circuit control coil circuit being closed through switch 36*a*, coil 27, homing swinger 26, homing deck 19, and switch 36*b*. Accordingly, the swingers will be made to step clockwise toward the next adjacent set of switching contacts, causing the homing swinger 26 to break contact with homing deck 19 prior to engaging the next adjacent contact on deck 19. The interruption of the control coil circuit at the homing deck allows the unidirectional ratchet mechanism associated with control coil 27 to reset for a subsequent cycle. The engagement of homing swinger 26 with the next adjacent contact of the homing deck restores the circuit and causes the incremental stepping cycle to repeat. This cyclical action continues until homing swinger 26 engages open-circuit terminal 23 on homing deck 19, at which point, the homing stepping action stops.

The operator then opens homing switch 36 and sets sequence counter 37 to the index sequence (in the case of a manually-set counter). Subsequent stepping of the stepping switch is accomplished by closing switch 29 and then opening switch 29 each time an incremental step is desired. The sequence counted by the sequence counter (and, accordingly, the sequence of contacts of decks 17 and 18 engaged by the swingers) is tabulated in a table of wiring instructions to indicate to the operator which terminal pairs are to be wired for a given step. In this way, the corresponding terminal pairs for a particular wiring sequence are identified. By using a different table for different multi-conductor cables, the device of FIG. 1 provides a standard test device which is made universally useful.

For a particular step of the sequence, the circuit for control coil 27 is completed as shown in FIG. 1 by switch 29, coil 27, swinger 24, contact 33, conductor 35, contact 34, and swinger 25. However, before control switch 29 is closed by the operator, such continuity between swingers 24 and 25 due to the connection of conductor 35 as shown will be registered by second indicator 38. If such continuity is lacking, then the stepping switch control coil cannot be actuated by closing switch 29 until conductor 35 has been properly connected as indicated by the reference table correlating conductor 35 with the indication shown by sequence counter 37.

Upon an indication of continuity by lamp 38, the operator may then close and open switch 29, causing control coil 27 to step the swingers to the next adjacent set of switching contacts corresponding to a preselected pair of terminals to be wired. Upon completion of the required wiring sequence, the operator closes homing switch 36 to index or "home" the stepping switch (switch 29 being open). The completed and tested wiring harness 40 may then be disconnected from standard receptacles 10 and 11, and a second pair of connectors (between which wiring is to be installed and tested) may be detachably connected to elements 10 and 11 respectively.

In the use of the device of FIG. 1, two measures of compatibility are required of the connectors between which wiring is to be connected. First, connectors 12 and 13 of the unit being assembled (e.g., element 40) are required to be compatible with the operational equipment with which cable harness 40 is intended to be used. For example, a given terminal member of connector 12 may not be necessarily wired to the same corresponding terminal member of connector 13, but may be required to be wired to a different terminal member of connector 13. Further, dissimilar sizes and styles of connectors may be used, whereby the corresponding terminals of a preselected pair of terminals cannot be determined from the symmetry of the comparative arrangements of the terminals. In other words, the style of each of connectors 12 and 13 and the correspondence of a terminal of one connector to a terminal on the other connector for a given preselected pair of terminals may vary as required.

The second measure of compatibility required of each of connectors 12 and 13 concerns the compatibility of connectors 12 and 13 with the standard receptacles 10 and 11, not only as to the ability to detachably engage or mate, due to a correspondence between the geometry of the devices, but also in the order in which specific test terminals engage specific terminals of the standard connectors whereby a specific switching sequence of test terminals is indicated by the successive sets of switch contacts of switching decks 17 and 18. In other words, the compatibility of the cable harness with the testing device requires convenient means for adapting the terminal connectors 12 and 13 of the cable harness for mating with the standard connectors 10 and 11 respectively, including providing the desired sequence of connections.

Such compatibility and adaptation can be conveniently provided by adapter cables. Such an adapter cable may comprise a plurality of conductors and have a first connector at one end which mates with the standard plug, and a second connector at the opposite end which mates with the connector on the cable harness to be tested, a single one of the plurality of conductors connecting corresponding terminals of the two connectors to provide the desired sequence of terminal pairs. In this way, the universal utility of the standard test set is realized, as shown in FIG. 2.

Referring to FIG. 2, there is illustrated a set of adapter cables for interconnecting the standard plug receptacles of FIG. 1 with the cable harness assembly to be wired. There are provided connectors 10*a* and 12*a* adapted for matingly engaging standard connector 10 and first connector 12 of cable harness 40', respectively, and having a first, second and third interconnecting conductors 70, 71 and 72 for interconnecting preselected ones of the terminals of standard connector 10 and respective ones of the terminals of connector 12. There are also provided connectors 11*a* and 13*a* adapted for matingly engaging standard connector 11 and second connector 13 of cable harness 40', respectively, and having a fourth, fifth and sixth interconnecting conductors 73, 74 and 75 for interconnecting preselected ones of the terminals of standard connector 11 and respective ones of the terminals of connector 13.

The several illustrated shapes of the terminal connectors for cable harness 40' and the various illustrated spacing between the terminals of such connectors relative to the shape and terminal spacing of the standard connectors, as shown in FIG. 2, are intended to indicate a variety of styles of connectors for which adapter connections are required. It is to be further noted that the exemplary number of three conductors of element 40', represented by conductors 16, 35 and 69, interconnect different terminals of connectors 12 and 13 in FIG. 2, rather than interconnecting corresponding terminals thereof as in FIG. 1. Therefore, further adaptation must also be provided for this difference in the arrangement of element 40', and is also included in the interconnection of the conductors of adapter cable assembly 80.

For example, conductor 35 of cable harness 40' is connected across first terminals 14 and 15 of standard connectors 10 and 11 respectively by means of adapter conductor 70 (which connects terminal 14 of connector 10 to one end of conductor 35 at connector 12) and adapter conductor 73 (which connects terminal 15 of connector 11 to the other end of conductor 35 at connector 13). Conductor 16 is similarly connected across a second terminal of standard connectors 10 and 12 by means of adapter conductors 71 and 74. Hence, means is provided (1) for adapting the standard connectors to different styles of connectors having a variety of connections, and also (2) for adapting the sequencing operation to any desired sequence.

In the event that the number of conductors of a multiconductor cable exceeds the number of switch contacts on each of decks 17 and 18 in FIG. 1, then additional pairs of switching decks of switching contacts are required, together with control means for switching to successive pairs of decks, as shown in FIG. 3.

Referring to FIG. 3, there is illustrated a preferred embodiment of the principle of the invention. There is provided a pair of multi-terminal standard plug receptacles 10' and 11' for receiving connectors 12' and 13' respectively to be wired and tested, a terminal on one receptacle and a corresponding terminal on the other of the standard plug receptacles comprising a preselected pair of terminals.

There is also provided a first multi-deck stepping switch for connecting a source of potential across successive preselected pairs of terminals of a programmed sequence of preselected terminal pairs. Such first stepping switch is comprised of at least five like decks of similarly arranged switching contacts, including a first pair of first and second decks 17 and 18, a second pair of third and fourth decks 45 and 46, and a homing deck 19, a corresponding switching contact on each of said decks comprising a single set of switching contacts, a corresponding contact of a first and second deck of a given pair of decks comprising an exclusive preselected pair of contacts. Also included are a corresponding number of ganged swingers as decks associated with said decks, including at least a first, second, third, fourth and a homing swinger 24, 25, 47, 48 and 26. Unidirectional control of the ganged swingers of the first stepping switch is achieved by means of control coil 27.

There is also provided a step control switch 29 for connecting terminal 39 of a potential source 31 to terminal 30 of first stepping switch coil 27, swinger 26 of homing deck 19 of the first stepping switch being connected to a second terminal 32 of coil 27.

There is further provided a second multi-deck stepping switch for connecting a first and second swinger associated with a first and second deck respectively of a mutually exclusive pair of decks of the first stepping switch to potential source 31. Such second stepping switch is comprised of a pair of first and second switching decks 50 and 51, a third control deck 52 and a homing deck 53; swingers 54, 55, 56 and 57 associated with decks 50, 51, 52 and 53 respectively; and a control coil 58 for incremental unidirectional control of swingers 54, 55, 56 and 57.

A corresponding contact of first and second decks 50 and 51 is connected to the associated swinger of a first and second deck respectively of each pair of decks of the first stepping switch. For example, swingers 24 and 25 of first and second decks 17 and 18 of the first pair of decks of the first stepping switch are connected to first contacts 59 and 60 respectively of the first and second decks 50 and 51 of the second stepping switch. Swingers 47 and 48 of decks 45 and 46 respectively of the first stepping switch are connected to second contacts 61 and 62 respectively of decks 50 and 51 respectively of the second stepping switch.

Each of successive contacts of control deck 52 of the second and third pole 36*a'*, 36*b'*, and 36*c'*. The first pole of a first deck respectively of successive pairs of decks of the first stepping switch, but for the last pair. For example, in FIG. 3, the last contact 63 of deck 17 of the first stepping switch is connected to first contact 64 of deck 52 of the second stepping switch.

A multi-pole homing switch 36' having at least a first, second and third pole 36*a'*, 36*b'*, and 36*c'*. The first pole or switch unit 36*a'* is connected in parallel with step control switch 29. The second pole or switch unit 36*b'* is adapted for commonly connecting all but first contact 23 of the switching contacts of homing deck 19 of the first stepping switch to a second terminal 42 of potential source 31. The third pole or switch unit 36*c'* is adapted for commonly connecting all but a first contact 65 of homing deck 53 of the second stepping switch to the second terminal of potential source 31.

A first terminal 66 of control coil 58 of the second stepping switch in FIG. 2 is connected to the first terminal 30 of coil 27. A second terminal 67 of coil 58 is commonly connected to swingers 56 and 57 of decks 52 and 53 respectiveily of the second stepping switch.

The above described arrangement, illustrated in FIG. 3, is operated in essentially the same manner as the device of FIG. 1 and performs the same functions. The significant difference in the function of the device of FIG. 3 is the improved means of effecting testing of an increased number of conductors, the number of which exceeds the number of switching contacts on a single deck (e.g., the number of preselected terminal pairs exceeds the preselected pairs of switching contacts available on a single pair of switching decks). In operation, successive closing and opening of switch 29 will cause swingers 24 and 25 (both of which are ganged to swingers 26, 47 and 48) to connect potential source 31 across such successive preselected pairs of terminals of connectors 10' and 11' as are connected to decks 17 and 18 where continuity exists between such terminals, as shown in FIG. 3, in the same manner as occurred in the functioning of the device of FIG. 1.

Such similar functioning occurs because the position of swingers 54 and 55 of the second stepping switch, in the position shown in FIG. 3, engage contacts 59 and 60 respectively of decks 50 and 51 respectively of the second stepping switch, thereby operatively connecting swingers 24 and 25 to the second terminal of coil 27 and potential source 70 respectively.

When the swingers 24, 25, 26, 47 and 48 associated with the decks of the first stepping switch have progressed to the last set of switching contacts on the decks of the first stepping switch, then coil 58 of the second stepping switch is energized and causes swingers 54 and 55 (both of which are also ganged to swingers 56 and 57) of the second stepping switch to move clockwise to the next adjacent set of switching contacts 61 and 62, thereby disconnecting the first pair of swingers 24 and 25 of the first stepping switch and operatively connecting the second pair of swingers 47 and 48 of the first stepping switch. At the same time, the swingers of the first stepping switch move one more step, engaging the first set of switching contact points. The second pair of decks of the first stepping switch now operatively engage the first preselected pair of contacts of the second pair of decks as the next preselected pair in the programmed sequence of terminal pairs. Successive testing will then cause the second pair of decks to function in the previous manner of the first pair of decks.

Upon completion of a specified testing sequence, the operater closes the homing switch 36' to cause the two stepping switches to independently and concurrently progress to an index reference or homing position in the manner described in connection with the device of FIG. 1.

While the increased testing capability of device of FIG. 3 has been described in terms of two pairs of decks for the test function of the first stepping switch, it is to be readily appreciated that the concept of such improvement may be applied to an arrangement employing still further pairs of decks for the first stepping switch or by employing yet another multi-deck stepping switch whose control coil is in parallel with control coil 27 of the first stepping switch, whereby the additional stepping switch would be operated in conjunction with the first stepping switch. The additional contacts on decks 50, 51 and 52 of the second stepping switch in FIG. 3 would be employed to accommodate the increased pairs of decks, as shown more clearly in FIG. 4.

Referring to FIG. 4, there is illustrated a switching matrix for the device of FIG. 3, wherein the first stepping switch may be comprised of adidtional pairs of switching decks or of several parallel-controlled multi-deck stepping switches (the homing deck of each of the first and second stepping switches having been omitted for clarity of illustration).

The switching matrix of FIG. 4 is comprised of a first stepping switch matrix 81 and a second stepping switch matrix 82. First stepping switch 81 is comprised of at least six decks of switching contacts (exclusive of the homing deck), indicated by the horizontal array of numerals 1–6 running from right to left across the top of matrix element 81. Numerals 1 and 2 designated a first pair of decks, numerals 2 and 3 a second pair of decks, and numerals 4 and 5 a third pair. Each deck is comprised of a plurality of equally spaced switch contacts, being 26 in number for the exemplary embodiment illustrated, indicated by the vertical array of numbers running down the left side of matrix 81 (contacts 4–25 being omitted for the sake of clarity of the drawing). Each deck has as associated swinger in cooperative relation therewith, the reference character of the swinger being that of the associated deck with an "*a*" appended thereto. For example, swinger 1*a* is associated with the first deck of matrix 81.

Such matrix representation of the first stepping switch is related to the corresponding parts of the embodiment of FIG. 3. For example, the first contact of deck numeral 1, and associated swinger 1*a* of matrix 81 in FIG. 4 corresponds to first contact 20 of first deck 17 and swinger 24 respectively of the first stepping switch in FIG. 3.

The second stepping switch matrix 82 is comprised of at least three decks (exclusive of the homing deck), indicated by the vertical array of numbers 1–3, running down the right side of matrix 82. Numerals 1, 2 and 3 correspond to decks 50, 51 and 52 respectively of the second stepping switch in FIG. 3. Each deck is comprised of a plurality of switching contacts equal in number to at least one less than the number of pairs of decks of the first stepping switch, a correspondingly numbered contact in each deck comprising a set of contacts, as indicated by the array of numerals from right to left across the top of matrix 82. Each deck has an associated swinger in cooperative relation therewith, the reference character of the swinger being that of the associated deck with a "*b*" appended thereto. For example, swinger 1*b* is associated with the first deck of matrix 82. The matrix representation of second stepping switch 82 in FIG. 4 is related to correspondingly numbered parts of the second stepping switch of FIG. 3. For example, con-

tact numeral 1 of deck numeral 1 and asosciated swinger 1*b* of matrix 82 correspond to contact 59 of deck 50 and swinger 54 respectively of FIG. 2.

Each set of corresponding contacts of matrix 82 further corresponds to a given pair of decks of matrix 81. For example, contact numeral (set) 1, 2 and 3 of matrix 82 correspond to first pair of decks 1 and 2, second pair of decks 3 and 4, and third pair of decks 5 and 6 respectively of matrix 81. Interconnection of matrix 81 and matrix 82 includes the connection of the last terminal of the first one of a given pair of decks to the corresponding contact of deck numeral 3 (e.g., the control deck) of matrix 82, and the connection of each of the swingers associated with such pair of decks to a mutually exclusive one of the corresponding contact of deck numerals 1 and 2, all first swingers of the pairs of swingers of matrix 81 being connected to a common deck of matrix 82. For example, swingers 1*a* and 2*a* of a first pair of swingers of matrix 81 are connected to switch contact numeral 1 of deck numerals 2 and 1 respectively of matrix 82, while switch contact numeral 26 of deck numeral 1 of matrix 81 is connected to switch contact numeral 1 of deck numeral 3 of matrix 82. In this way, the number of pairs of decks of a combination of first stepper switches which may be thus operated is limited to one pair more than the number of switch contact points per deck of the second stepping switch.

For the exemplary second stepping switch 82 of FIG. 4, shown as having twenty contacts per deck, the maximum number of pairs of decks of matrix 81 which may be controlled would be twenty-one. Hence, a maximum number of conductors or pairs of terminal points to be programmed by the device is equal to twenty-one multiplied by the number of contacts per deck on the first stepping switch matrix 81. For the exemplary first matrix 81 in FIG. 2, shown as having twenty-six contacts per deck, this would be 546 conductors or pairs of points. In other words, by means of the above described arrangement the maximum number of pairs of wiring points to be programmed is equal to one plus the number of contacts per deck of the second stepping switch matrix multiplied by the number of contacts per deck of the first stepping switch matrix, as shown in FIG. 5.

Referring to FIG. 5, there is illustrated a block diagram of a continuity testing programmer device employing the principles illustrated in FIG. 4. There is provided a first stepping switch means including a step actuator 27 in driving relationship with a plurality of pairs of switching decks, comprised of a plurality of switching contacts adapted for connecting potential source 31 across the terminals of respective conductors of cable harness assembly 40. The decks of each pair are designated D*a* and D*b* respectively with a numeral indicating the particular deck pair. For an arrangement of *n* decks, the last two pairs are designated $Da_{(n-1)}$, $Db_{(n-1)}$ and Da_n, Db_n. Decks Da_1 and Db_1 correspond to decks 17 and 18 of FIG. 3.

Normally-open switch 29 and actuator 27 are interposed in series circuit between source 31 and a first deck of each of said pairs of decks. There is further provided a second or deck selection stepping switch means comprised of selection actuator 58 in driving relationship with deck selector A or first deck selection means 50, deck selector B or second deck selection means 51 and selection control means 52. Selection actuator 58 is responsively connected to source 31 by means of switch 29. First and second selection means 50 and 51 are arranged to operatively select a first and corresponding second deck respectively of a pair of decks of the first stepping switch means, in response to the sequential operation of selection control means 52, corresponding to the function of first and second decks 50 and 51 of the second stepping switch in the illustrated embodiment of FIG. 3. Selection control means 52 is responsively connected to a mutually exclusive one of the last switching contact on the first deck of all but the last pair of decks, and is arranged in operative cooperation with selection actuator 58 for driving deck selectors 50 and 51, corresponding to the cooperation of control deck 52 with element 58 of FIG. 3. The homing functions of the first stepping switch and of the deck selection switch have been omitted for convenience in exposition and illustration.

In operation, the device of FIG. 5 functions in the same manner as the device of FIG. 3. Closing and opening control switch 29 will cause step actuator 27 to be energized only if internal continuity exists between a preselected pair of corresponding terminals of assembly 40. If such internal continuity does not exist, then step actuator 27 becomes inoperative. If such continuity does exist, then the resulting energization of step actuator 27 will cause lines 90 and 91 to be connected through successive mutually exclusive switch contact pairs of a given pair of decks (say, decks Da_1 and Db_1) to corresponding successive pairs of terminals of assembly 40, as long as internal continuity of assembly 40 exists for each successive terminal pair. When the last switch contact pair of a given pair of decks is engaged, for which a corresponding internal continuity exists in assembly 40, then the next successive operation of control switch 29 causes selection actuator 58 to step, as well as causing step actuator 27 (via selection control 52 and its connections) to operate, whereupon deck selectors 50 and 51 are caused to operatively disengage the gvien pair of decks (decks Da_1 and Db_1) and operatively engage the next successive deck pair (say, decks Da_2 and Db_2). At the same time step actuator 27 effects operative engagement of the first contact of each deck of such successive pair of decks. Successive operation of switch 29 causes such successive deck pair to operate in like manner as the preceding pair.

Hence, it is to be appreciated that a series of stepping switches may be employed to achieve the capability for continuity testing any desired number of terminal pairs. Thus, it will be seen that the device of the invention provides improved means for programming the wiring and continuity checking of circuits.

Although the invention has been described and illustrated in detail, it is to be clearly understood that the same is by way of illustration and example only and is not to be taken by way of limitation, the spirit and scope of this invention being limited only the terms of the appended claims.

I claim:

1. In a system for automatically programming the continuity checking of circuits by sequentially connecting each of the circuits to be checked to a source of current until a discontinuity is detected the combination comprising a source of current.

a pair of stepping switches, each switch having a number of contacts, each contact of one stepping switch corresponding to a contact of the other stepping switch, and each switch having a swinger, said swingers being mechanically connected to each other in order to be simultaneously stepped to corresponding contacts,

actuating means for stepping said pair of swingers from one pair of corresponding contacts to another in response to a flow of current, said means comprising a solenoid coil having first and second terminals,

means for connecting the first terminal of said coil to one of said swingers,

a control switch connecting the second terminal of said coil to said source of current,

means connected to the other of said swingers for providing a return current path to said source,

and means for connecting circuits to be checked between said stepping switches, each circuit having one terminal connected to a contact of one stepping switch and another terminal connected to a corresponding contact of the other stepping switch whereby said actuating means steps said pair of swingers from one pair of corresponding contacts to

another each time said control switch is closed only if the circuit connected to the one pair of corresponding contacts has continuity.

2. A wiring programmer comprising a plurality of terminal connecting switch means each comprising a first and second multi-contact stepping switch terminal deck, each having a swinger associated with a number of contacts, each contact of the first terminal deck and a corresponding contact of the second terminal deck forming one of a number of contact pairs, said contact pairs being adapted to be connected to respective end terminals of respective ones of a number of electrical circuits to be wired; a source of electric potential; deck selector means for selectively connecting different swingers of said terminal connecting switch means to said source, said deck selector means comprising first and second multi-contact stepping switch selector decks, each having a swinger associated with a number of contacts, each contact of the first selector deck and a corresponding contact of the second selector deck forming one of a number of contact pairs, said contact pairs being connected to respective swingers of respective ones of said terminal decks associated in pairs; step actuator means for stepping the swingers of said terminal connecting switch means; selection actuator means for stepping the swinger of said deck selector means; and selection control means comprising a multi-contact stepping switch terminal deck having a swinger connected to said selection actuator means, and having each contact connected to a predetermined contact of said first multi-contact stepping switch terminal deck of each of said plurality of terminal connecting switch means for actuating said selection actuator means in response to stepping of at least one swinger of said terminal connecting switch means to said predetermined contacts.

3. Programming means comprising: a stepping switch having at least three like decks of switching contacts, including at least a first pair of first and second decks and a homing deck, mutually corresponding switching contacts on each of said decks comprising a single set of switch contacts, a corresponding number of swingers as decks associated with said decks, including at least a first, second and homing swinger, and a two-terminal control coil for incrementally unidirectionally driving said swingers so successive sets of switch contacts; a pair of first and second multi-terminal standard plug receptacles responsively connected to a first and second one respectively of a pair of said decks, each terminal of each said plug being connected to a corresponding mutually distinct switch contact of said deck; a step control switch having an input terminal connected to one terminal of a two-terminal source of potential and an output terminal connected to a first terminal of said control coil of said stepping switch; said first and homing swingers of said stepping switch being commonly connected to a second terminal of said control coil; said second swinger of said stepper switch being connected to a second terminal of said source of potential; a sequence indicator connected in parallel circuit with said control coil for providing an indication of the particular set of switching contacts engaged by said swingers at a given time; and a continuity indicator connected across said input terminal of said control switch and said second terminal of said control coil for indicating the existence of electrical circuit continuity between said pair of swingers.

4. The device of claim 3 further comprising a second stepping switch having a first, second and homing deck, corresponding switching contacts on each of said second stepping switch comprising a single set of switching contacts, a corresponding number of swingers as decks associated with said second stepping switch, including a first, second and homing swinger, and a two-terminal control coil, one terminal of said control coil of said second stepping switch being connected to a first terminal of said control coil of said first mentioned stepping switch, another terminal of said control coil of said second stepping switch being connected to said homing swinger of said second stepping switch; said first mentioned stepping switch further comprising successive pairs of first and second decks of switching contacts and successive pairs of first and second swingers associated with said first and second decks of said second stepping switch; the first swinger of each of said first pair and said successive pair of swingers of said first mentioned stepping switch being respectively connected to a first and successive switch contacts of said first deck of said second switch, said second swinger of said first and successive pairs of swingers of said first mentioned stepping switch being connected to a first and successive switch contacts of the second deck of said second stepping switch.

5. Programming means comprising: a stepping switch having at least three like decks of switching contacts, including at least a first pair of first and second decks and a homing deck, corresponding switching contacts on each of said decks comprising a single set of switch contacts, a corresponding number of swingers as decks associated with said decks, including at least a first, second and homing swinger, and a two-terminal control coil for incrementally unidirectional driving said swingers to successive sets of switch contacts; a pair of first and second multi-pin standard plug receptacles responsively connected to a first and second one respectively of a pair of said decks, each pin of each said plug being connected to a corresponding mutually distinct switch contact of said deck; a step control switch having an input terminal connected to one terminal of a two-terminal source of potential and an output terminal connected to a first terminal of said control coil of said stepping switch; said first and homing swingers of said stepping switch being commonly connected to a second terminal of said control coil; said second swinger of said stepping switch being connected to a second terminal of said source of potential; a multi-pole homing switch having at least a first and second switching pole, said first pole of said switch being connected in parallel with said control switch and said second pole adapted for commonly connecting all but a first one of the switch contacts of said homing deck of said second swinger; a sequence indicator connected in parallel circuit with said control coil for providing an indication of the particular set of switch contact points engaged by said swingers at a given time; and a continuity indicator connected across said input terminal of said control switch and said second terminal of said control coil for indicating the existence of electrical circuit continuity between said pair of swingers.

6. The device of claim 5 further comprising a second stepping switch having a first, second and homing deck, corresponding switching contacts on each of said decks comprising a single set of switching contacts, a corresponding number of swingers as decks associated with said decks, including a first, second and homing swinger, and a two-terminal control coil, one terminal of said control coil of said second stepper being connected to a first terminal of said control coil of said first mentioned stepping switch, another terminal of said control coil of said second stepping switch being connected to said homing swinger of said second stepping switch; said first mentioned stepping switch further comprising successive pairs of first and second decks of switching contacts and successive pairs of first and second swingers associated with said first and second decks respectively; the first swinger of each of said first pair and said successive pairs of swingers of said first mentioned stepping switch being connected to a first and successive switch contacts of said first deck of said second switch, said second swinger of said first and successive pairs of swingers of said firt mentioned stepping switch being connected to a first and successive switch contacts of the second deck of said second stepping switch; said multi-pole homing switch further comprising a second pole commonly connecting all but a first one of said switch

contacts of said homing deck of said second stepping switch to said second swinger of said first stepping switch.

7. Programming means comprising: a pair of multi-terminal standard plug receptacles for receiving connectors to be wired and tested, a terminal of one and a corresponding terminal of the other of said standard receptacles comprising a preselected pair of terminals, a first multiple-deck stepping switch comprising at least two pairs of switching decks and a homing deck of switching contacts, corresponding switching contacts on each of said decks comprising a single set of switch contacts, a corresponding number of swingers as decks associated with said decks, and a two-terminal control coil for incremental unidirectional driving of said swingers to successive sets of switch contacts; a corresponding contact of a first and second deck of a given pair of decks comprising a mutually exclusive preselected pair of contacts, a first and second terminal of each preselected pair of terminals being connected to a corresponding contact respectively of a mutually exclusive preselected pair of contacts; a step control switch having an input terminal connected to one side of a source of potential and an output terminal connected to said control coil of said first stepping switch; the swinger associated with the homing deck of said first stepping switch being connected to a second terminal of said control coil of said first stepping switch, a second multi-deck stepping switch for connecting a first and second swinger associated with a first and second deck respectively of a mutually exclusive pair of decks of said first stepping switch to a source of potential, said second stepping switch comprising at least one pair of switching decks, a control deck and a homing deck of switching contacts, corresponding switching contacts on each of said decks comprising a single set of switch contacts, a corresponding number of swingers as decks associated with said decks, and a two terminal control coil for incremental unidirectional driving of said swingers to successive sets of switch contacts, a corresponding contact of a first and second deck of said pair of switching decks being connected to the associated swinger of a first and second deck respectively of each pair of decks of said first stepping switch, each of successive contacts of the control deck of said second stepping switch being connected to the last contact of a first deck respectively of successive pairs of decks but for the last pair of said decks of said first stepping switch, a multi-pole homing switch having at least a first, second and third switching pole, said first pole being connected in parallel with said control switch, said second and third pole being connected in series with all but a first one of the switch contacts of the homing deck of said first and second stepping switch respectively to said source of potential, one terminal of the control coil of said second stepping switch being connected to said one terminal of the control coil of said first stepping switch, a second terminal of said control coil of said second stepping switch being connected to said swingers associated with said control deck and said homing deck of said second stepping switch, the first and second swingers of said second stepping switch being connected to the second terminal of said control coil of said first stepping switch and of said potential source respectively.

References Cited by the Examiner

UNITED STATES PATENTS

2,849,677	8/58	Hannon	324—73
2,869,076	1/59	Evans et al.	324—73 X
3,014,163	12/61	Berryhill et al.	317—139

WALTER L. CARLSON, *Primary Examiner.*