(12) INTERNATIONAL APPLICATION PUBLISHED UNDER THE PATENT COOPERATION TREATY (PCT)

(19) World Intellectual Property Organization
International Bureau

(43) International Publication Date
3 November 2005 (03.11.2005)

PCT

(10) International Publication Number
WO 2005/102004 A2

(51) International Patent Classification: Not classified

(21) International Application Number:
PCT/US2005/013161

(22) International Filing Date: 18 April 2005 (18.04.2005)

(25) Filing Language: English

(26) Publication Language: English

(30) Priority Data:

60/563,766	20 April 2004 (20.04.2004)	US
10/981,413	4 November 2004 (04.11.2004)	US

(63) Related by continuation (CON) or continuation-in-part (CIP) to earlier application:

US	10/981,413 (CON)
Filed on	4 November 2004 (04.11.2004)

(71) Applicant *(for all designated States except US)*: **CTB, INC.** [US/US]; State Road 15 North, P.O. Box 2000, Milford, IN 46542 (US).

(72) Inventors; and

(75) Inventors/Applicants *(for US only)*: **GROSSMAN, Rodney, B.** [US/US]; 18010 CR 42, Goshen, IN 46526 (US). **HOLMES, Justin, M.** [US/US]; 851 Harrison Boulevard, Valparaiso, IN 46385 (US).

(74) Agents: **FOSS, Stephen, J.** et al.; Harness, Dickey & Pierce, P.L.C., P.O. Box 828, Bloomfield Hills, MI 48303 (US).

(81) Designated States *(unless otherwise indicated, for every kind of national protection available)*: AE, AG, AL, AM, AT, AU, AZ, BA, BB, BG, BR, BW, BY, BZ, CA, CH, CN, CO, CR, CU, CZ, DE, DK, DM, DZ, EC, EE, EG, ES, FI, GB, GD, GE, GH, GM, HR, HU, ID, IL, IN, IS, JP, KE, KG, KM, KP, KR, KZ, LC, LK, LR, LS, LT, LU, LV, MA, MD, MG, MK, MN, MW, MX, MZ, NA, NI, NO, NZ, OM, PG, PH, PL, PT, RO, RU, SC, SD, SE, SG, SK, SL, SM, SY, TJ, TM, TN, TR, TT, TZ, UA, UG, US (patent), UZ, VC, VN, YU, ZA, ZM, ZW.

(84) Designated States *(unless otherwise indicated, for every kind of regional protection available)*: ARIPO (BW, GH, GM, KE, LS, MW, MZ, NA, SD, SL, SZ, TZ, UG, ZM, ZW), Eurasian (AM, AZ, BY, KG, KZ, MD, RU, TJ, TM), European (AT, BE, BG, CH, CY, CZ, DE, DK, EE, ES, FI, FR, GB, GR, HU, IE, IS, IT, LT, LU, MC, NL, PL, PT, RO, SE, SI, SK, TR), OAPI (BF, BJ, CF, CG, CI, CM, GA, GN, GQ, GW, ML, MR, NE, SN, TD, TG).

Declarations under Rule 4.17:

— *as to applicant's entitlement to apply for and be granted a patent (Rule 4.17(ii)) for the following designations AE, AG, AL, AM, AT, AU, AZ, BA, BB, BG, BR, BW, BY, BZ, CA, CH, CN, CO, CR, CU, CZ, DE, DK, DM, DZ, EC, EE, EG, ES, FI, GB, GD, GE, GH, GM, HR, HU, ID, IL, IN, IS, JP, KE, KG, KM, KP, KR, KZ, LC, LK, LR, LS, LT, LU, LV, MA, MD, MG, MK, MN, MW, MX, MZ, NA, NI, NO, NZ, OM, PG, PH, PL, PT, RO, RU, SC, SD, SE, SG, SK, SL, SM, SY, TJ, TM, TN, TR, TT, TZ, UA, UG, UZ, VC, VN, YU, ZA, ZM, ZW, ARIPO patent (BW, GH, GM, KE, LS, MW, MZ, NA, SD, SL, SZ, TZ, UG, ZM, ZW), Eurasian patent (AM, AZ, BY, KG, KZ, MD, RU, TJ, TM), European patent (AT, BE, BG, CH, CY, CZ, DE, DK, EE, ES, FI, FR, GB, GR, HU, IE, IS, IT, LT, LU, MC, NL, PL, PT, RO, SE, SI, SK, TR), OAPI patent (BF, BJ, CF, CG, CI, CM, GA, GN, GQ, GW, ML, MR, NE, SN, TD, TG)*

— *as to the applicant's entitlement to claim the priority of the earlier application (Rule 4.17(iii)) for the following designations AE, AG, AL, AM, AT, AU, AZ, BA, BB, BG, BR, BW, BY, BZ, CA, CH, CN, CO, CR, CU, CZ, DE, DK, DM, DZ, EC, EE, EG, ES, FI, GB, GD, GE, GH, GM, HR, HU, ID, IL, IN, IS, JP, KE, KG, KM, KP, KR, KZ, LC, LK, LR, LS, LT, LU, LV, MA, MD, MG, MK, MN, MW, MX, MZ, NA, NI, NO, NZ, OM, PG, PH, PL, PT, RO, RU, SC, SD, SE, SG, SK, SL, SM, SY, TJ, TM, TN, TR, TT, TZ, UA, UG, UZ, VC, VN, YU, ZA, ZM, ZW, ARIPO patent (BW, GH, GM, KE, LS, MW, MZ, NA, SD, SL, SZ, TZ, UG, ZM, ZW), Eurasian patent (AM, AZ, BY, KG, KZ, MD, RU, TJ, TM), European patent (AT, BE, BG, CH, CY, CZ, DE, DK, EE, ES, FI, FR, GB, GR, HU, IE, IS, IT, LT, LU, MC, NL, PL, PT, RO, SE, SI, SK, TR), OAPI patent (BF, BJ, CF, CG, CI, CM, GA, GN, GQ, GW, ML, MR, NE, SN, TD, TG)*

Published:

— *without international search report and to be republished upon receipt of that report*

For two-letter codes and other abbreviations, refer to the "Guidance Notes on Codes and Abbreviations" appearing at the beginning of each regular issue of the PCT Gazette.

(54) Title: GRANULAR MATERIAL STORAGE CONTAINER AND ASSOCIATED METHOD

(57) Abstract: A granular material storage container and associated method. The storage container includes a foundation, a peripheral wall supported on the foundation, a plurality of vertical stiffeners attached to the peripheral wall, and a horizontal connector connecting the peripheral wall to the foundation. The horizontal connector extends between at least a pair of vertical stiffeners and operates for load transfer from the peripheral wall to the foundation during single pass sweeping.

WO 2005/102004 A2

GRANULAR MATERIAL STORAGE CONTAINER AND ASSOCIATED METHOD

CROSS-REFERENCE TO RELATED APPLICATIONS

[0001] This application claims the benefit of U.S. Provisional Application No. 60/563,766, filed on April 20, 2004, and U.S. Utility Application No. 10/981,413, filed on November 4, 2004. The disclosures of the above applications are incorporated herein by reference.

INTRODUCTION

[0002] Storage containers for bulk granular material, such as grain bins, are subjected to considerable loads in a variety of directions and combinations. These loads include environmental loads, such as snow, wind and seismic loads, the weight of the granular material stored in the container, the weight of the container, and the weight of supported structures, such as conveyors, walkways, etc. The loads on a prior art grain bin 50, a portion of which is illustrated in FIG. 1, are transferred to the foundation 52, which supports the grain bin 50, through the roof (not shown), the peripheral wall 54 and the vertical stiffeners 56 of the grain bin 50. Therefore, adequate anchorage of the grain bin 50 to the foundation 52 is essential to prevent displacement of the grain bin 50. Historically, anchorage is provided by the vertical stiffeners 56 along the periphery of the grain bin 50. The vertical stiffeners 56 are bolted along their length to the peripheral wall 54 of the grain bin 50 with horizontal bolts 58, and also to the foundation 52 with a horizontal plate 60, which extends from each vertical stiffener 56. The horizontal plate 60 is bolted to the foundation 52 with vertical anchor bolts 62 which are sized to transmit shear (horizontal) and tension (vertical uplift) loads. Conventional grain bins may also include angle irons or standard roll-formed base flanges that extend from the peripheral wall to provide moisture protection or backing for a sealant against moisture.

[0003] Referring to prior art grain bins 50 in FIGS. 2, 3A, 3B and 3C, in addition to the loads described above, large prior art grain bins 50 (i.e., grain

bins having a diameter larger than about 70 feet) can, in particular, be subjected to substantial horizontal loads that are generated during bin sweeping. After the grain bin 50 is emptied via gravity through a well or sump 66 in the center 70 of the foundation 52, a grain pile 64 remains in the grain bin 50 and must be swept into the well 66. The remaining grain pile 64 defines an inverted cone shape determined by an angle of repose β, which has a value characteristic of the particular granular material. Typical angles of repose for grains are about 27°-30°.

[0004] Bin sweeping is conventionally done with a horizontal auger 68 pinned at the center 70 of the foundation 52 and slowly rotating around the grain bin 50. The auger 68 draws grain from the grain pile 64 toward the center 70 and down the well 66. As the auger 68 travels, eliminating the grain pile 64, the auger 68 creates an asymmetrical pile of grain 72 with a resultant horizontal force H, which is at a maximum when the grain bin 50 is about half-swept. To reduce horizontal loads generated during bin sweeping and the effect of such loads on large diameter grain bin structures, augers 68 with sectional/extendable lengths have been used, such that the emptying of the grain bin 50 can be completed in two or more passes of the auger 68, thereby reducing the magnitude of the horizontal force H. For a double pass sweep, FIG. 3A, 3B and 3C illustrate respectively the grain pile 64 before the first pass sweep, after the first pass sweep, and after the second pass sweep.

[0005] Attempts to accommodate the horizontal loads by increasing the number and size of anchor bolts 62 can still result in shear failures of the anchor bolts 62 under shear loads produced by single pass sweeping, especially in grain bins of a diameter greater than about 72 feet. Failure of the anchor bolts 62 progresses to the horizontal bolts 58 along the length of the vertical stiffeners 56 causing "unzipping" of vertical stiffeners 56 from the base plate 60 upwards, and/or causes extensive damage

[0006] Although double or multiple pass augers 68 have been used to reduce the magnitude of the horizontal force, their use requires bin entry by operators between passes to extend the length of the auger 68. There is, therefore, a need for improved and cost efficient large grain bins that reduce or

eliminate the need for bin entry during bin sweeping, and thus, improve safety during grain unloading.

SUMMARY

[0007] The present teachings provide a granular material storage container that includes a foundation, a peripheral wall supported on the foundation, a plurality of vertical stiffeners attached to the peripheral wall, and a horizontal connector connecting the peripheral wall to the foundation. The horizontal connector extends between at least a pair of vertical stiffeners and operates for load transfer from the peripheral wall to the foundation during single pass sweeping.

[0008] The present teachings also provide a method of adapting a granular material storage container for single pass sweep. The method includes providing the storage container with a primary support structure structurally sufficient for forces generated by multiple pass sweeping, but structurally insufficient for forces generated by single pass sweeping, and providing the storage container with a secondary support structure, which, in combination with the primary support structure, is structurally sufficient for forces generated by single pass sweeping.

[0009] Further areas of applicability of the present invention will become apparent from the detailed description provided hereinafter. It should be understood that the detailed description and specific examples, while indicating the preferred embodiment of the invention, are intended for purposes of illustration only and are not intended to limit the scope of the invention.

BRIEF DESCRIPTION OF THE DRAWINGS

[0010] The present invention will become more fully understood from the detailed description and the accompanying drawings, wherein:

[0011] FIG. 1 is a perspective view of a portion of a prior art grain bin;

[0012] FIG. 2 is a side view of a prior art grain bin illustrating bin sweeping;

[0013] FIG. 3A is a side view of the prior art grain bin showing a grain pile before a first pass of a double pass sweep;

[0014] FIG. 3B is a side view of the prior art grain bin of FIG. 3A showing the grain pile after the first pass of the double pass sweep;

[0015] FIG. 3C is a side view of the prior art grain bin of FIG. 3A after a second pass of the double pass sweep;

[0016] FIG. 4 is a partial perspective view of a granular material storage container according to the present teachings;

[0017] FIG. 5 is a perspective view of a horizontal connector according to the present teachings;

[0018] FIG. 6 is cross-sectional view of the horizontal connector of FIG. 5;

[0019] FIG. 7 is a perspective view of a horizontal connector according to the present teachings;

[0020] FIG. 8 is a perspective view of a horizontal connector according to the present teachings;

[0021] FIG. 9 is an exemplary diagram illustrating shear loads generated after one half of a grain bin is swept by single pass sweeping;

[0022] FIG. 10A is a side view of a grain bin showing a grain pile before a pass of a single pass sweep according to the present teachings;

[0023] FIG. 10B is a side view of the grain bin of FIG. 10A, after one half of the grain bin is swept by one-half of a single pass sweep; and

[0024] FIG. 10C is a side view of the grain bin of FIG. 10B, after a complete single pass sweep.

DETAILED DESCRIPTION

[0025] The following description is merely exemplary in nature and is in no way intended to limit the invention, its application, or uses. For example, although a grain bin is illustratively described, the present teachings are not limited to grain bins, but can be used for any storage containers of bulk granular material.

[0026] Referring to FIG. 4, an exemplary granular material storage container 100 according to the present teachings, illustrated as a grain bin, includes a foundation 102, a peripheral wall 104 and a plurality of vertical stiffeners 106. The peripheral wall 104 can be constructed of sidewall sheets, which can be conventionally made of corrugated galvanized steel or other structural material. One or more sheets can be laminated together to provide greater strength for tall grain bins 100. In one aspect, the foundation 102 can be made of concrete or other suitable materials. The vertical stiffeners 106 are attached to the peripheral wall 104 along their entire length with a series of spaced horizontal bolts 108. The vertical stiffeners 106 can be made, for example, of galvanized steel or other suitable structural materials, and can have a cross-sectional profile selected for a desired load carrying capacity. Available profiles with various load carrying capacities, include, for example, Z-type, channel type, hat type, and Brock® type. The vertical stiffeners 106 can be installed outside the grain bin 100, on the outer side 120 of the grain bin 100, as illustrated in FIG. 4. Each vertical stiffener 106 is attached to the foundation 102 with a horizontal base plate 110, which can be integral to the vertical stiffener 106 or can be part of a bracket 114 which is attached to the base portion 116 of the vertical stiffener 106. An anchor bolt 112 attaches the base plate 110 to the foundation 102.

[0027] Referring to FIGS. 1-8, the grain bin 100 includes a horizontal connector 180 that extends between at least two vertical stiffeners 106 and connects the peripheral wall 104 to the foundation 102. The horizontal connector 180 can be made of galvanized structural steel or other appropriate structural material. The horizontal connector 180 is a structural support member with a load-carrying capacity that functions as a horizontal stiffener and horizontal load transfer member. The horizontal connector 180 is attached to the peripheral wall 104 with a plurality of wall bolts or similar wall fasteners 182, and to the foundation 102 with a plurality of base fasteners 184.

[0028] Referring to FIGS. 4, 5 and 6, the horizontal connector 180 includes a web 190 for attachment to the peripheral wall 104 of the grain bin 100, and a flange 192 for attachment to the foundation 102. The web 190 and

the flange 192 define an angle α which can be selected such that the web 190 conforms or mates with the profile of the peripheral wall 104, which can have a corrugated shape. The web 190 can include a plurality of pre-drilled holes 194 for receiving the wall fasteners 182. Similarly, the flange 192 can include a plurality of pre-drilled holes 196 for receiving the base fasteners 184. As seen in FIG. 4, both the web 190 and the flange 192 are attached on the outer side 120 of the peripheral wall 104.

[0029] The horizontal connectors 180 of the grain bin 100 of the present teachings provide additional load transfer paths first through the wall fasteners 182 and then through the base fasteners 184, thereby reducing the load transferred through the horizontal bolts 108 and the anchor bolts 112 that attach the vertical stiffeners 106 to the foundation 102.

[0030] In alternative embodiments, the horizontal connectors 180 can be attached to the grain bin 100 such that the peripheral wall 104 rests on the flange 192, while the flange 192 remains outside the grain bin 100 and the web 190 remains inside the grain bin 100, or conversely. Such attachment is also possible for retrofitting an existing multiple pass sweep grain bin 50, because the peripheral wall 54 can be locally lifted to insert the horizontal connectors 180 under the peripheral wall 54, with the web 190 and the flange 192 on opposite sides of the peripheral wall 54.

[0031] Referring to FIGS. 7 and 8, the horizontal connector 180 can have end cutouts 200 to accommodate the base plates 110 of two vertical stiffeners 106. The horizontal connector 180 can also be sized to extend over a distance spanned by three vertical connectors 106, by including an intermediate cutout 202. It will be appreciated that the horizontal connectors 180 can be placed end to end to cover the entire periphery 204 of the grain bin 100. It will be appreciated, however, that the horizontal connectors 180 can also be placed selectively between selected vertical stiffeners in locations where the horizontal loads are anticipated to be consistently high, such as about locations where the start and end points of the sweep motion can be made to occur.

[0032] Referring to FIG. 9 and FIGS. 10, shear loads generated by the grain load when half the grain bin is swept by a single pass sweep of a single pass auger 69 are represented by a solid line 300. In this example, a grain bin of a diameter of 90 feet is modeled for computational purposes using the software package RISA-3D (Version 4.5) available from RISA Technologies, Lake Forest, California. The concentric circles 310 represent the magnitude of shear loads in uniform increments. Sweeping starts at angle 0° indicated by position "A" and proceeds in the clockwise direction. At angle 180° indicated by position "B", half of the grain bin is swept, and the grain pile is concentrated in the area between 0° and 180° (upper area of the diagram of FIG. 9, and FIG. 10B). The maximum shear loads in the direction indicated by axis "Y" develop symmetrically at about 15° and 165°, or 15° away from the start position A and the half-way position B of sweeping toward the grain pile.

[0033] In the example of FIG. 9, one or more horizontal connectors 180 could be placed selectively between the vertical stiffeners 106 that are positioned between 150°-200° and symmetrically opposite locations. Such selective positioning of horizontal connectors can be used in combination with a manual or automated/programmable controller 400 can be placed outside the grain bin 100 and connected to the single pass auger 69. The controller 400 can be operated to control various aspects of the motion of the single pass auger 69, including insuring a specific location of the auger 69 when single pass sweeping starts, such as the start position A of FIG. 9.

[0034] The horizontal connectors 180 can be conveniently attached outside the grain bin 100. The horizontal connectors 180 define a secondary structure that can be attached to an existing grain bin 50, which has a primary structure defined by vertical stiffeners 56 that is structurally sufficient for forces generated during double or multiple pass sweep, but is not structurally sufficient for forces generated during single pass sweep. By adding the horizontal connectors 180 to the primary structure of the grain bin 50, the grain bin 50 can be adapted for single pass sweep. In the present context, a structure is "structurally sufficient" for a force or load when the structure can withstand repeated application of the load during normal use without failure or

other undesirable deformation/fracture during the structure's conventional life expectancy.

[0035] For very large diameter grain bins, such as grain bins of a diameter greater than about 100 feet, additional reduction of horizontal force loads carried by the anchor bolts 112 during bin sweeping can be achieved by increasing the dimensions of the horizontal connector 180 and, in particular, the distance "d" of the wall bolt 194 on the web 190 from the flange 192 to reduce the length of load path of the horizontal forces through the wall fasteners 182 and base fasteners 184, and/or by increasing the number of wall fasteners 182 and base fasteners 184 per unit length of the horizontal connector 180.

[0036] The horizontal connector 180 can be easily manufactured from a flat pattern that can be roll-formed to define the web 190 at an angle to the flange 192, or by any other known method, and can be sized for use with newly-constructed granular storage containers/grain bins 100 of different sizes and with existing grain bins 50. Therefore, any size grain bin can be used for a single pass sweep, as taught herein. Furthermore, the present teachings provide a cost-efficient single pass sweep grain bin 100, which improves safety by eliminating the need for bin entry during unloading, and which provides greater resistance to seismic loads, allowing taller grain bins to be used in zones of high seismic activity.

[0037] Various methods associated with the use of the disclosed horizontal connectors 180 are apparent from the discussion herein. More specifically, the present teachings provide a method for adapting a grain bin for single pass sweep, such as converting the prior art grain bin 50 to the grain bin 100 of the present teachings. The method includes providing a grain bin 50 that has a primary support structure of vertical stiffeners 56 that is structurally sufficient for forces generated by multiple pass sweeping, but structurally insufficient for forces generated by single pass sweeping. The method includes adding a secondary support structure of substantially horizontal connectors 180 and their attachments, which, in combination with the primary support structure of the prior art grain bin 50, is structurally sufficient for forces generated by single pass sweeping. The horizontal connectors 180 can be attached to the

outside of an existing peripheral wall 104. Alternatively, the grain bin 100 can be raised to attach the flange 190 onto the interior of the peripheral wall 104.

[0038] While particular embodiments have been described in the specification and illustrated in the drawings, it will be understood by those skilled in the art that various changes may be made and equivalents may be substituted for elements thereof without departing from the scope of the invention as defined in the claims. In addition, many modifications may be made to adapt a particular situation or material to the present teachings without departing from the essential scope thereof. Therefore, it is intended that the present teachings not be limited to the particular embodiments illustrated by the drawings and described in the specification, but that the present teachings will include any embodiments falling within the foregoing description and the appended claims.

CLAIMS

What is claimed is:

1. A granular material storage container comprising:

a foundation;

a peripheral wall supported on the foundation;

a plurality of vertical stiffeners, the stiffeners being attached to the peripheral wall; and

a horizontal connector connecting the peripheral wall to the foundation and extending between at least a first and a second of the plurality of vertical stiffeners, the horizontal connector operable for load transfer from the peripheral wall to the foundation during single pass sweeping.

2. The storage container of claim 1, wherein the horizontal connector is disposed outside the grain bin.

3. The storage container of claim 1, wherein the horizontal connector comprises a web attached to the peripheral wall and a flange attached to the foundation.

4. The storage container of claim 3, wherein the web is attached to the peripheral wall with a plurality of wall fasteners between the first and the second vertical stiffeners.

5. The storage container of claim 4, wherein the flange is attached to the foundation with a plurality of base fasteners between the first and the second vertical stiffeners.

6. The storage container of claim 5, wherein the web is attached outside the storage container and the flange is attached inside the storage container.

7. The storage container of claim 5, wherein the web is attached inside the storage container and the flange is attached outside the storage container.

8. The storage container of claim 3, wherein the web is shaped to conform to a portion of the peripheral wall.

9. The storage of claim 3, wherein the flange is shaped to accommodate at least one of the plurality of vertical stiffeners.

10. The storage container of claim 3, wherein the flange includes two end cutouts accommodating portions of the first and the second vertical stiffeners.

11. The storage container of claim 10, wherein the flange includes an intermediate cutout for accommodating a portion of a third vertical stiffener of the plurality of vertical stiffeners.

12. The storage container of claim 5, wherein the plurality of vertical stiffeners are structurally sufficient for loads generated by multiple-pass sweeping, but not structurally sufficient for loads generated by single pass sweeping, and the combination of the plurality of vertical stiffeners with the plurality of wall fasteners and the plurality of base fasteners is structurally sufficient for loads generated by single pass sweeping.

13. The storage container of claim 1, wherein the plurality of vertical stiffeners are structurally sufficient for loads generated by multiple-pass sweeping, but not structurally sufficient for loads generated by single pass sweeping, and the combination of the plurality of vertical stiffeners with the horizontal connector is structurally sufficient for loads generated by single pass sweeping.

14. The storage container of claim 1, wherein the horizontal connector is attached about a location of maximum shear load predicted from a starting point of single pass sweeping.

15. A method of adapting a granular material storage container for single pass sweep, the method comprising:

providing the storage container with a primary support structure that is structurally sufficient for forces generated by multiple pass sweeping, but structurally insufficient for forces generated by single pass sweeping; and

providing the storage container with a secondary support structure, which, in combination with the primary support structure, is structurally sufficient for forces generated by single pass sweeping.

16. The method of claim 15, wherein providing a primary support structure comprises attaching a plurality of vertical stiffeners to a peripheral wall of the storage container.

17. The method of claim 16, wherein providing a secondary support structure comprises attaching a horizontal connector to the peripheral wall and to a foundation of the storage container, the horizontal connector extending between at least first and second of the plurality of vertical stiffeners, the horizontal connector operable for load transfer from the peripheral wall to the foundation.

18. The method of claim 17, wherein attaching a horizontal connector comprises attaching a web of the horizontal connector to the peripheral wall and attaching a flange of the horizontal connector to the foundation.

19. The method of claim 18, wherein attaching a web comprises attaching the web with a plurality of wall fasteners.

20. The method of claim 19, wherein attaching a flange comprises attaching the flange with a plurality of base fasteners.

21. The method of claim 16, wherein providing a secondary support structure comprises attaching a plurality of horizontal connectors to the peripheral wall and to a foundation of the storage container, each horizontal connector extending between at least a pair of the plurality of vertical stiffeners, such that the plurality of horizontal connectors surrounds the storage container, each horizontal connector operable for load transfer from the peripheral wall to the foundation.

22. The method of claim 21, further comprising attaching the horizontal connectors outside the storage container.

23. The method of claim 21, further comprising attaching the horizontal connectors about a location of maximum shear load predicted from a starting point of single pass sweeping.

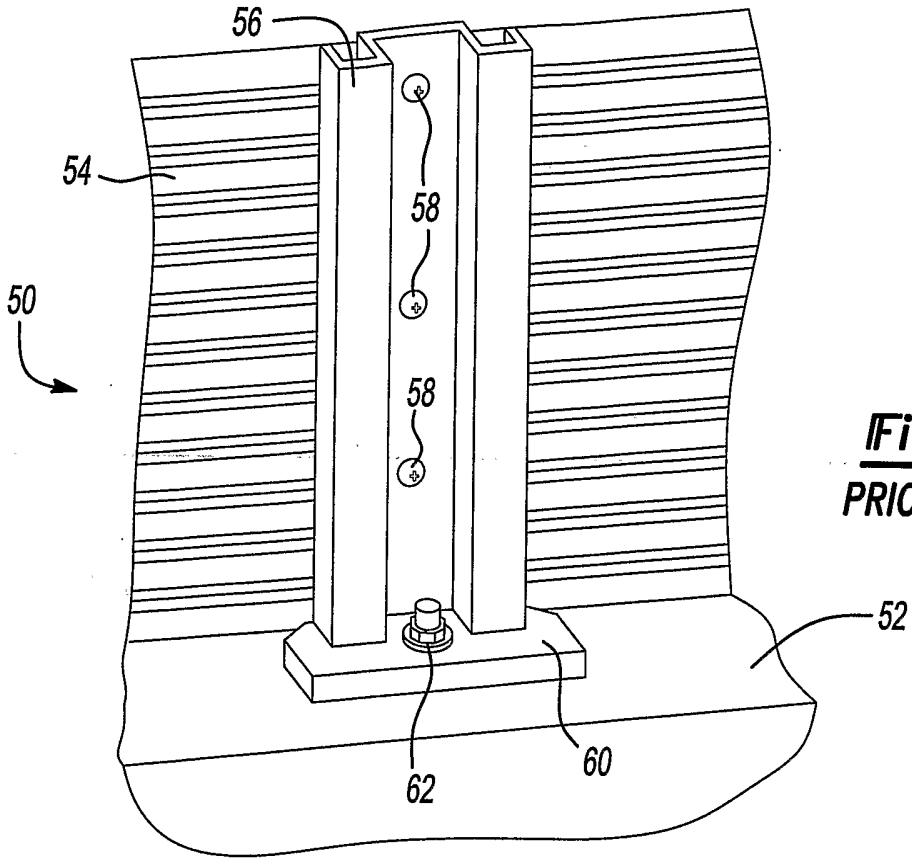

Fig-1
PRIOR ART

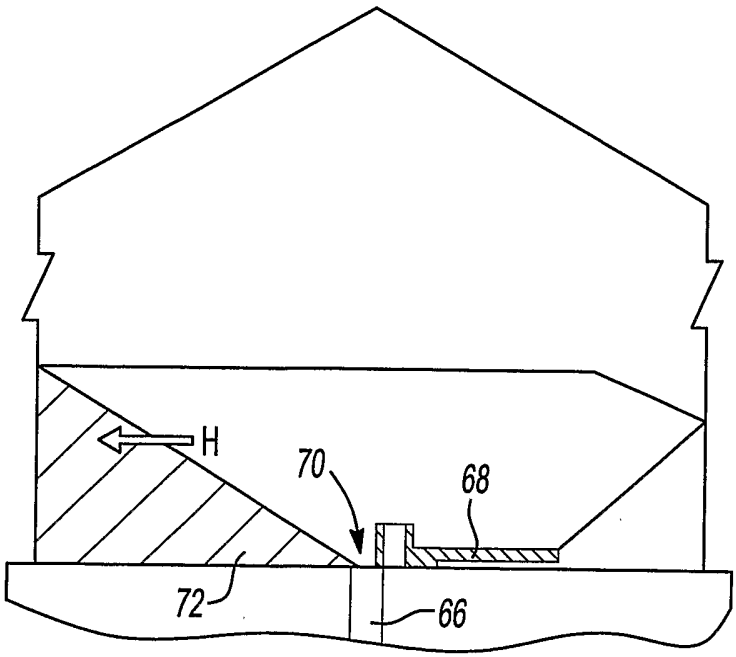

Fig-2
PRIOR ART

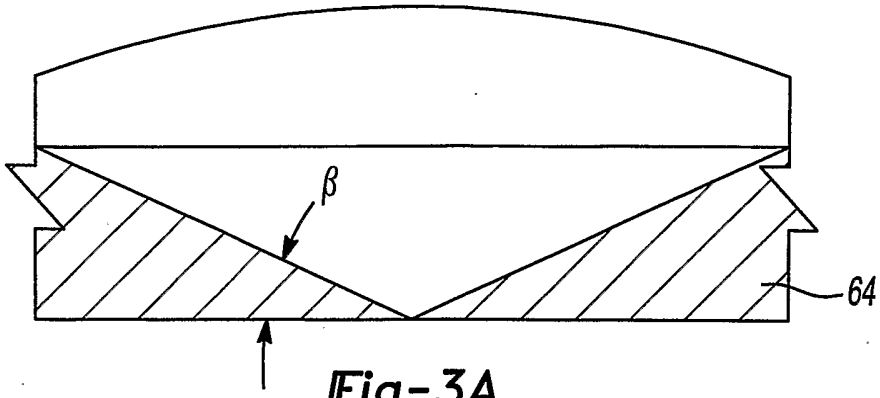

Fig-3A
PRIOR ART

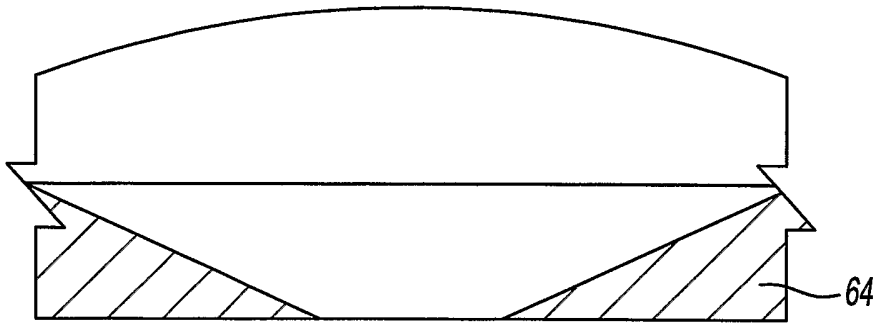

Fig-3B
PRIOR ART

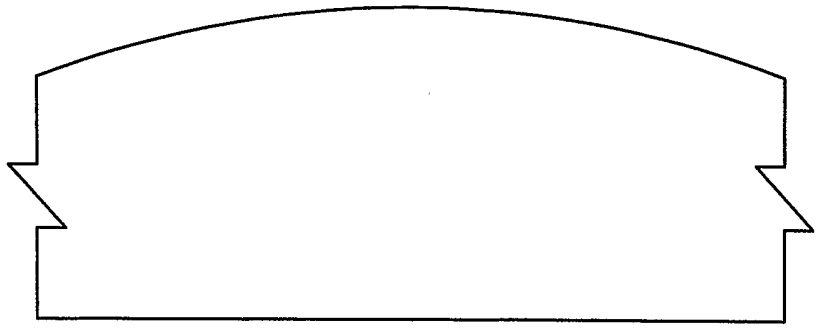

Fig-3C
PRIOR ART

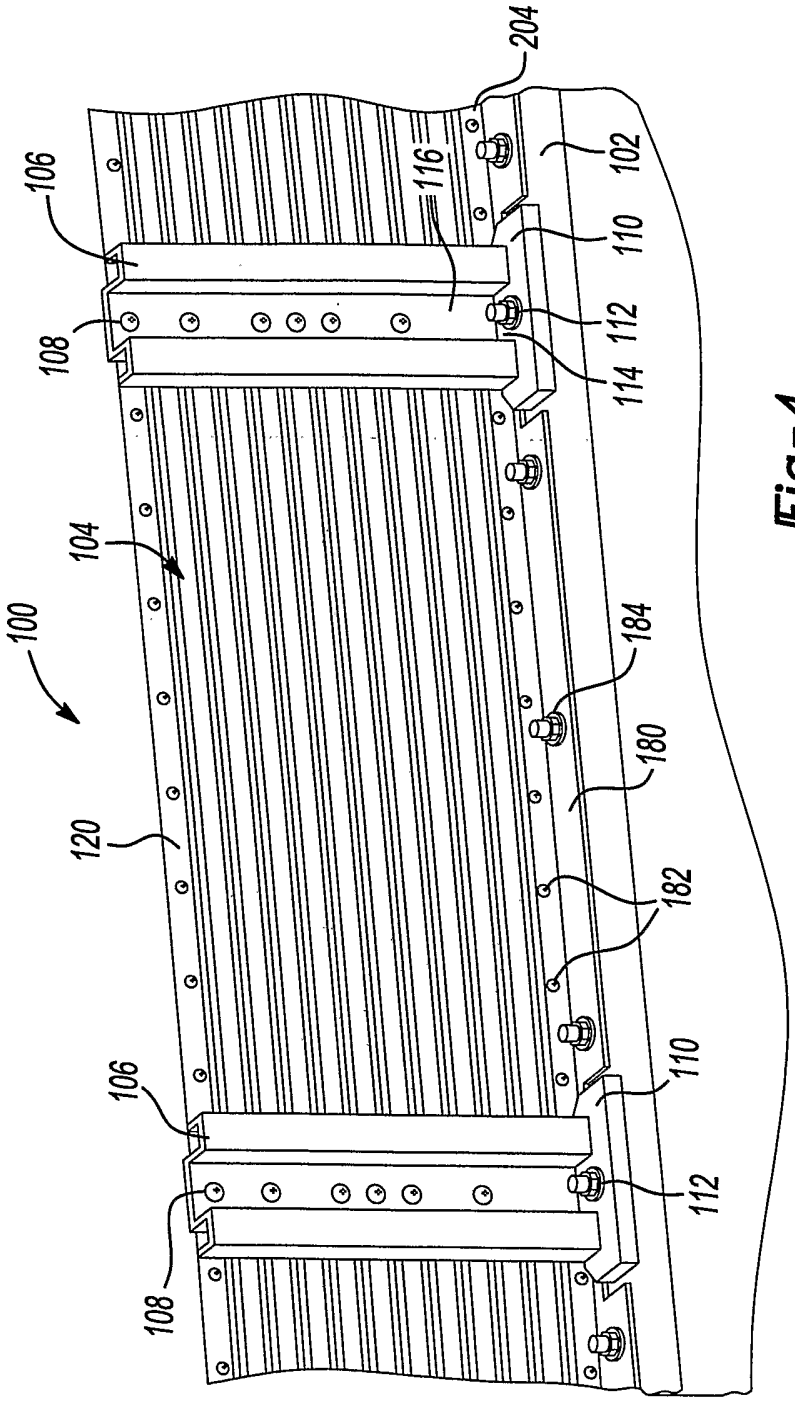
204
106
116
102
110
112
108
114
104
100
184
180
120
182
110
106
112
108

Fig-4

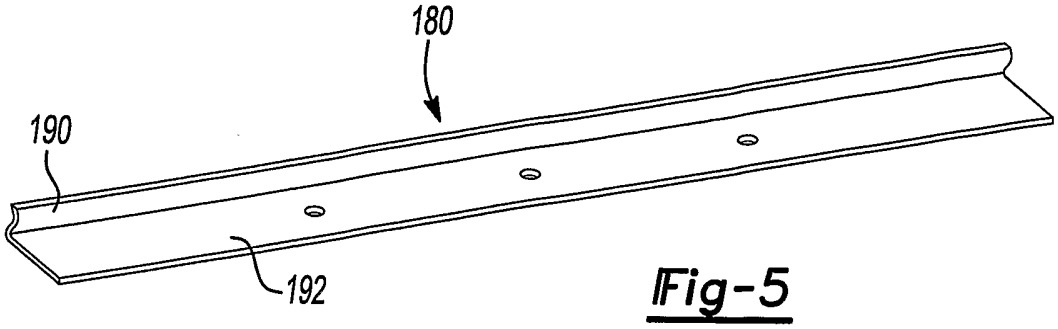

Fig-5

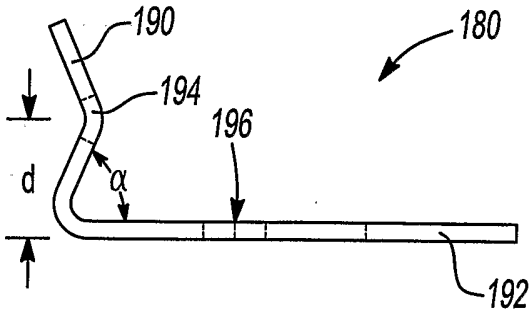

Fig-6

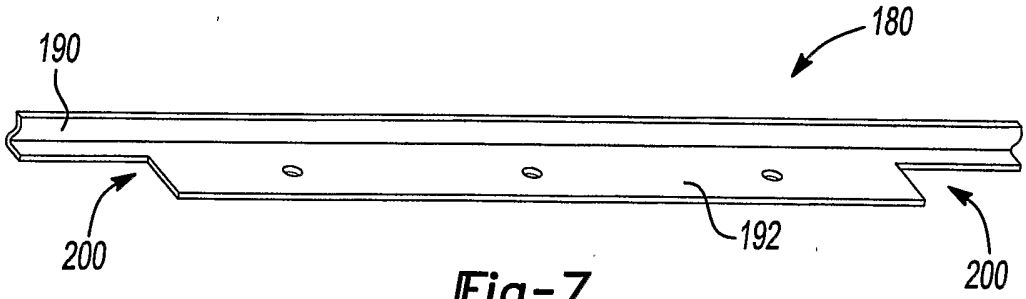

Fig-7

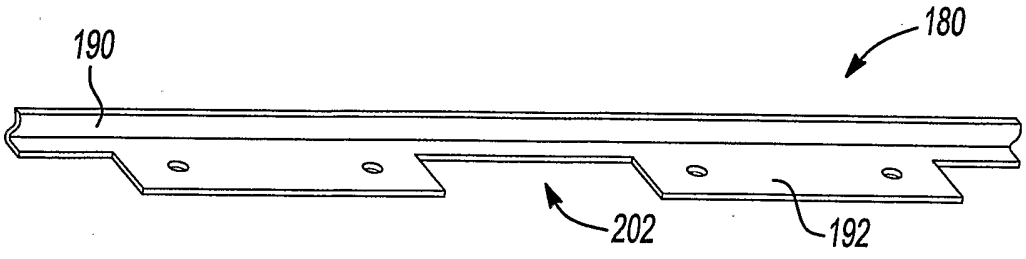

Fig-8

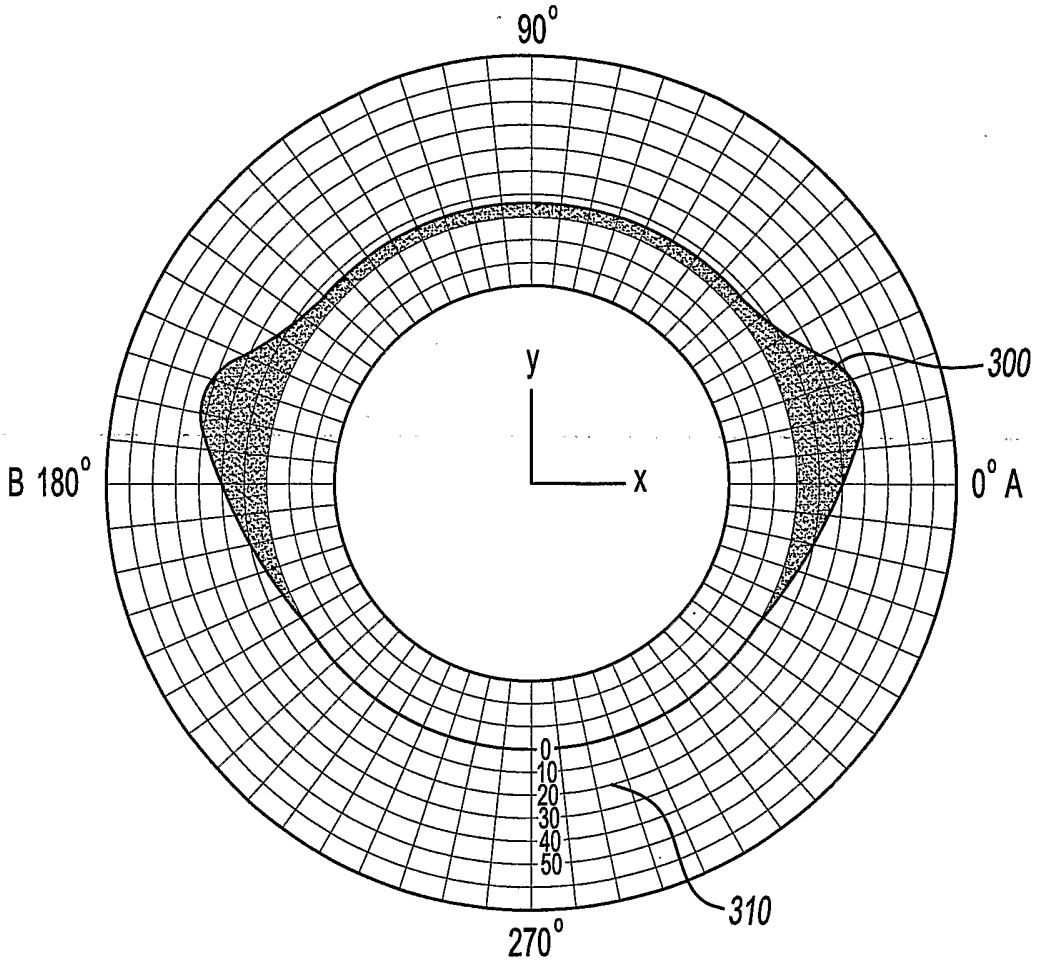

Fig-9

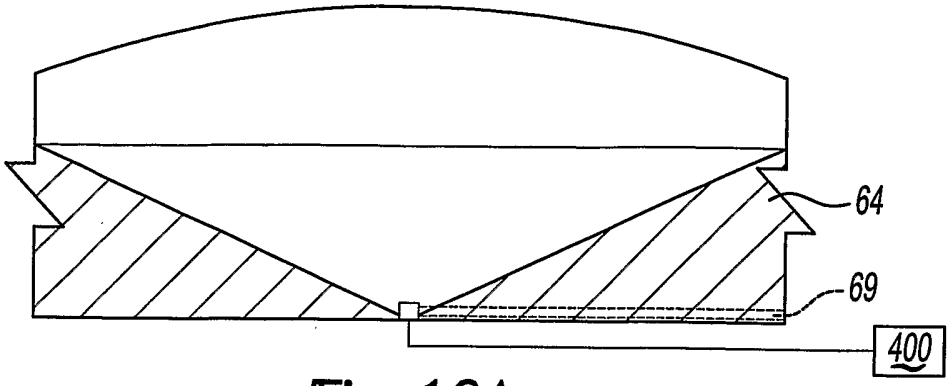

Fig-10A

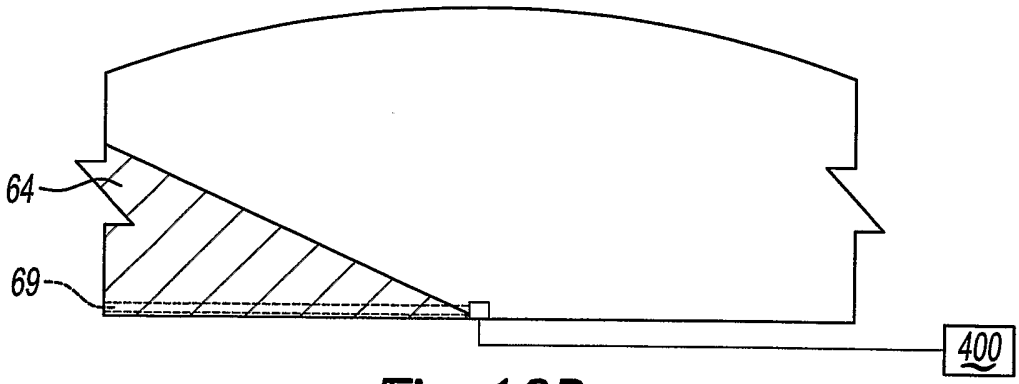

Fig-10B

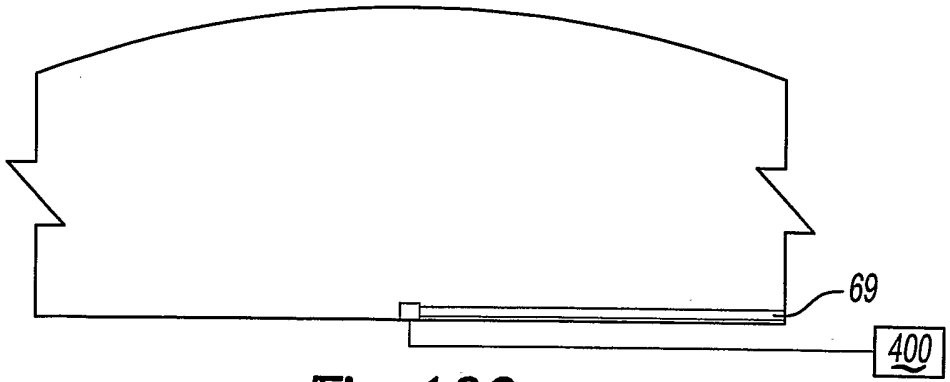

Fig-10C