Office de la Propriété Intellectuelle du Canada
Un organisme d'Industrie Canada

Canadian Intellectual Property Office
An agency of Industry Canada

CA 2401436 A1 2001/09/07

(21) 2 401 436

(12) DEMANDE DE BREVET CANADIEN
CANADIAN PATENT APPLICATION

(13) A1

(86) Date de dépôt PCT/PCT Filing Date: 2001/02/21
(87) Date publication PCT/PCT Publication Date: 2001/09/07
(85) Entrée phase nationale/National Entry: 2002/08/28
(86) N° demande PCT/PCT Application No.: CA 2001/000192
(87) N° publication PCT/PCT Publication No.: 2001/065655
(30) Priorité/Priority: 2000/02/28 (09/514,775) US

(51) Cl.Int.^{7}/Int.Cl.^{7} H02G 3/08, H02G 3/12

(71) Demandeur/Applicant:
HYDE, DOUGLAS, CA

(72) Inventeur/Inventor:
HYDE, DOUGLAS, CA

(74) Agent: BORDEN LADNER GERVAIS LLP

(54) Titre : CONNEXION RAPIDE DE BOITIER ELECTRIQUE UNIVERSEL ET CABLAGE
(54) Title: QUICK CONNECTING UNIVERSAL ELECTRICAL BOX AND WIRING SYSTEM

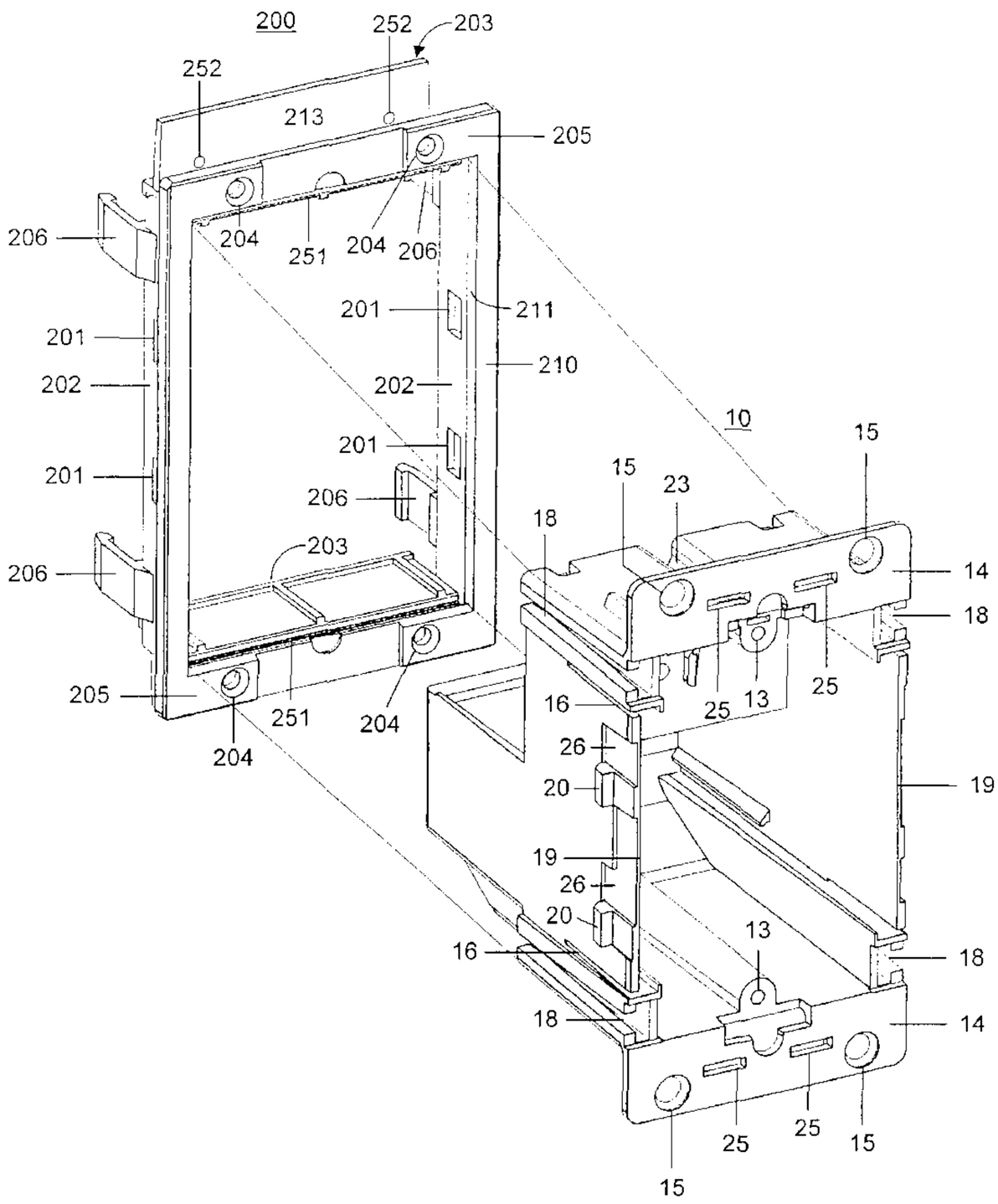

(57) Abrégé/Abstract:
A quick connecting universal electrical box system for the mounting of electrical sockets, switches or any electronic or communication component that is typically installed into a wall is disclosed. The system comprises a mounting frame and an electrical box, which can be pre-wired with any socket unit or component, such that installation of the electrical box into a wall is

CA 2401436 A1 2001/09/07

(21) 2 401 436

(13) A1

(57) Abrégé(suite)/Abstract(continued):
greatly simplified. The mounting frame is first inserted into a wall, followed by insertion of the electrical box into the mounting frame. The action of inserting the electrical box into the mounting frame forces flaps in the mounting frame to engage and lock the mounting frame into the wall. Retaining studs formed on flexible side panels of the electrical box then engage with corresponding openings in the mounting frame to secure the electrical box within the mounting frame. Secure installation of this electrical box is simple and quick without the need for any tools or fastening screws.

(12) INTERNATIONAL APPLICATION PUBLISHED UNDER THE PATENT COOPERATION TREATY (PCT)

(19) World Intellectual Property Organization
International Bureau

(43) International Publication Date
7 September 2001 (07.09.2001)

PCT

(10) International Publication Number
WO 01/65655 A3

(51) International Patent Classification[7]: H02G 3/08, 3/12

(21) International Application Number: PCT/CA01/00192

(22) International Filing Date: 21 February 2001 (21.02.2001)

(25) Filing Language: English

(26) Publication Language: English

(30) Priority Data:
09/514,775 28 February 2000 (28.02.2000) US

(63) Related by continuation (CON) or continuation-in-part (CIP) to earlier application:
US 09/514,775 (CIP)
Filed on 28 February 2000 (28.02.2000)

(71) Applicant and
(72) Inventor: **HYDE, Douglas** [CA/CA]; Unit B, 335 Roosevelt Avenue, Ottawa, Ontario K2A 1Z2 (CA).

(74) Agents: **FRITZ, Joachim, T.** et al.; Borden Ladner Gervais LLP, 1000-60 Queen Street, Ottawa, Ontario K1P 5Y7 (CA).

(81) Designated States *(national)*: AE, AG, AL, AM, AT, AU, AZ, BA, BB, BG, BR, BY, BZ, CA, CH, CN, CR, CU, CZ, DE, DK, DM, DZ, EE, ES, FI, GB, GD, GE, GH, GM, HR, HU, ID, IL, IN, IS, JP, KE, KG, KP, KR, KZ, LC, LK, LR, LS, LT, LU, LV, MA, MD, MG, MK, MN, MW, MX, MZ, NO, NZ, PL, PT, RO, RU, SD, SE, SG, SI, SK, SL, TJ, TM, TR, TT, TZ, UA, UG, US, UZ, VN, YU, ZA, ZW.

(84) Designated States *(regional)*: ARIPO patent (GH, GM, KE, LS, MW, MZ, SD, SL, SZ, TZ, UG, ZW), Eurasian patent (AM, AZ, BY, KG, KZ, MD, RU, TJ, TM), European patent (AT, BE, CH, CY, DE, DK, ES, FI, FR, GB, GR, IE, IT, LU, MC, NL, PT, SE, TR), OAPI patent (BF, BJ, CF, CG, CI, CM, GA, GN, GW, ML, MR, NE, SN, TD, TG).

[Continued on next page]

(54) Title: QUICK CONNECTING UNIVERSAL ELECTRICAL BOX AND WIRING SYSTEM

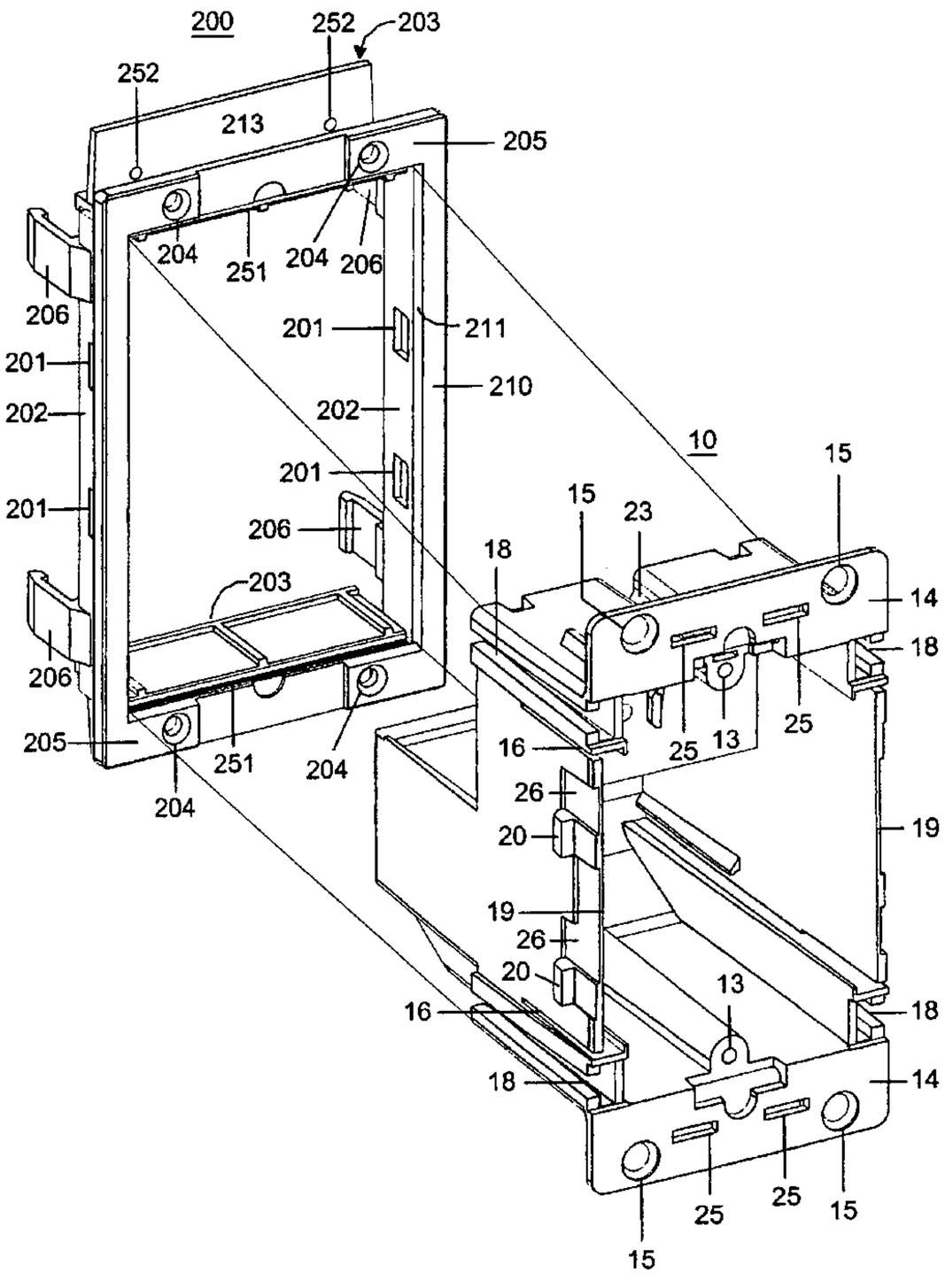

(57) Abstract: A quick connecting universal electrical box system for the mounting of electrical sockets, switches or any electronic or communication component that is typically installed into a wall is disclosed. The system comprises a mounting frame and an electrical box, which can be pre-wired with any socket unit or component, such that installation of the electrical box into a wall is greatly simplified. The mounting frame is first inserted into a wall, followed by insertion of the electrical box into the mounting frame. The action of inserting the electrical box into the mounting frame forces flaps in the mounting frame to engage and lock the mounting frame into the wall. Retaining studs formed on flexible side panels of the electrical box then engage with corresponding openings in the mounting frame to secure the electrical box within the mounting frame. Secure installation of this electrical box is simple and quick without the need for any tools or fastening screws.

WO 01/65655 A3

WO 01/65655 A3

Published:
— *with international search report*

(88) Date of publication of the international search report:
3 January 2002

For two-letter codes and other abbreviations, refer to the "Guidance Notes on Codes and Abbreviations" appearing at the beginning of each regular issue of the PCT Gazette.

TITLE OF INVENTION

Quick connecting universal electrical box and wiring system

FIELD OF APPLICATION

The present invention relates to electrical distribution systems and is particularly directed to the field of distribution systems for effecting the distribution and connection of electrical power or data such as telephone or computer network signals in commercial buildings, homes or cottages.

BACKGROUND OF THE INVENTION

In commercial and residential buildings, electrical boxes are used to house outlets that distribute power, switches that control lighting and virtually any type of receptacle that carries electrical signals. These electrical boxes are usually installed during construction of the buildings before walls or panels are secured to the joists and studs. Rectangular openings are cut out from the wall panels to allow access to the installed electrical boxes.

An example of this type of prior art electrical box is shown in US Patent 4,165,443 by Figart et. al. issued August 21, 1979, in which an electrical box system for mounting modular switch and receptacle units to a wall is disclosed. The receptacle units have special shapes with elongated terminals protruding from the backside, which fit into complementary openings within the electrical box. Power and distribution cables connect directly to access openings in the box, and are routed to the receptacle unit terminals through a bus plate array. The electrical box is mounted to a wall stud using a mounting bracket having mounting slots and lips that correspond to mounting slots and lips in the electrical box. Once the mounting bracket is secured to a wall stud, the electrical box can slide into its corresponding slots and lips. This system is disadvantageous in that there is no method to secure the electrical box to any structure other than a stud within a wall. This is not always acceptable since the placement of an electrical box is frequently determined by

function or desire rather than the location of existing wall studs. Another disadvantage is the necessity for screws and tools to fix the mounting bracket to the stud, which reduces the overall ease of installation of the electrical box.

The limited placement ability of the electrical box is addressed in US Patent 5,500,487 by Leon issued March 19, 1996 and US Patent 4,485,282 by Lee issued November 27, 1984. Leon discloses a simple electrical box having contacts inside the box for making electrical connection to removable switch or receptacle units. The switch and receptacle units have special shapes that allow them to be inserted within the box that avoids incorrect electrical connections. This electrical box has the capability of being installed at any position in a wall, but requires screws and tools to fasten its securing tabs to the wall.

Similar to Leon, Lee discloses a base, similar to an electrical box, with niches that can accommodate removable switch or receptacle units. A mechanical system ensures that the units can be locked into the base to prevent unwanted removal of the switch or receptacle units. This system also requires the base to be secured to a wall with screws.

Both Leon and Lee overcome the limited placement problem of Figart et. al., but still require screws and tools in order to secure the respective product into a wall, which is time-consuming and cumbersome. Furthermore, an electrical box secured to a wall by screws can become unstable after installation.

US Patent 4,500,746 by Meehan issued February 19, 1985 shows a self-contained electrical box that can either be a receptacle or switch. The power supply wires are pressed into the back of the receptacle without the need for stripping off the insulation from the wires to make electrical contact. A screw engages a pawl in the back of the unit that eventually sandwiches the wall between the pawl and an external securing tab of the electrical box. This particular feature is an improvement over the inventions of Leon and Lee in that the electrical box remains more stable and secure

in the wall. Installation of this electrical box is still somewhat time consuming since a tool is required for setting the screw.

US Patent 4,215,787 by Moran, Jr. et. al. issued August 5, 1980 discloses an electrical box with moulded wedge-shaped retaining stunts for easy insertion and securing of the electrical box at any position in a wall. The electrical box can accommodate any receptacle unit. As with Leon, Lee and Meehan, this electrical box does not have to be fixed to a stud. Additionally, the retaining stunts can ensure that the electrical box remains stable within the wall. The distinctive feature of this electrical box over the previous references is that no screws or tools are required for its installation within the wall. However, the stability of the electrical box depends on the precise opening in the wall. The opening must be complementary in size and configuration to the open front side of the box. A slightly enlarged opening can result in an electrical box that is unstable in either the vertical or horizontal directions within the wall. It is even possible for the electrical box to be pulled out from the opening in the wall during normal use as a power outlet if the opening is too wide. Therefore, this electrical box has a very low tolerance for variations in wall opening sizes, especially in the vertical direction, and is difficult to securely lock into place.

The system shown in US Patent 4,847,444 by Holland, issued July 11, 1989 includes an electrical box holder which can snap into an opening cut out from a wall. The electrical box, affixed with any receptacle unit, can be firmly secured by the holder within the wall. This is achieved by sandwiching a wall edge between outer lips and inner edges of the holder. Spacers can be attached to the inner edges of the holder to reduce the spacing between it and the outer lip in order to accommodate thinner walls. Although the holder is more stable than the electrical box of Moran, Jr. et. al., screws and tools are required to secure the electrical box to the holder.

US Patent 4,226,393 by Rardin et. al., issued October 7, 1980 discloses an anchoring device for securing an electrical box within a wall. The electrical box snaps into the anchoring device that comprises of wedge shaped resilient fingers for allowing easy entry into an opening cut out from a wall. Clamps are secured to the

anchor device via screws such that the wall is sandwiched between the fingers and clamps. Even though the electrical box is quickly secured into the anchoring device, the anchoring device itself will not remain secure within the wall until the clamps are screwed to the anchoring device to lock the anchoring device to the wall. This method of installation is still rather cumbersome and time consuming.

There is clearly a need for a quick connecting electrical box system in which an electrical box can be firmly and reliably secured within an opening in a wall without the use of any screws and tools.

SUMMARY OF THE INVENTION

It is an object of the invention to provide a quick connecting universal electrical box mounting system including a mounting frame, for the installation of electrical sockets, switches or any electronic component that is typically installed into a wall for users to access, and can be secured within an opening in a wall without the need of any screws or tools.

The mounting frame preferably has wall engaging means attached to the top and bottom sides of the frame for retaining the frame in a wall opening of appropriate size. The electrical box is preferably shaped and constructed to closely fit the mounting frame such that the electrical box can be inserted into the mounting frame. Retaining means on the electrical box co-operate with interlocking means in the mounting frame. The retaining means are preferably retaining studs formed on flexible side panels of the electrical box and the interlocking means are preferably openings formed in the side walls of the frame for receiving the retaining studs. The electrical box is preferably of standard size to accommodate virtually all types of electrical sockets or switches.

Once the mounting frame is inserted into an opening in a wall, the electrical box can be fully inserted into the mounting frame. The action of inserting the

electrical box into the mounting frame preferably forces the wall engaging means into a wall engaging position to lock the mounting frame in the wall opening.

In the preferred embodiment, the retaining studs on the flexible side panels of the preferred electrical box then engage corresponding openings in the preferred mounting frame to secure the electrical box within the mounting frame. No tools are required to secure the mounting frame and electrical box within the wall other than those required to create the wall opening. This system allows for a quick and efficient installation process.

BRIEF DESCRIPTION OF THE DRAWINGS

Exemplary embodiments of the invention will now be further described with references to the drawings in which same reference numerals designate similar parts throughout the Figures, and wherein:

Figure 1 shows an orthogonal exploded view of the preferred electrical box and mounting frame combination in accordance with the invention;

Figure 2 shows an orthogonal view of the electrical box of Figure 1, illustrating the front, top and left sides;

Figure 3 shows an orthogonal view of the electrical box of Figure 1, illustrating the front, top and right sides;

Figure 4 shows an orthogonal view of the electrical box of Figure 1, illustrating the back, top and left sides;

Figure 5 shows an orthogonal view of the electrical box of Figure 1, illustrating the back, top and right sides;

Figure 6 shows an orthogonal view of the electrical box of Figure 1, illustrating the back, bottom and right sides;

Figure 7 shows a front elevational view of the electrical box of Figure 1;

Figure 8 shows a cross sectional view of the electrical box of Figures 2 and 7 taken along line A-A;

Figure 9 shows a rear elevational view of the electrical box of Figure 1;

Figure 10 shows a top plan view of the electrical box of Figure 1;

Figure 11 shows a bottom plan view of the electrical box of Figure 1;

Figure 12 is a right side view of the electrical box of Figure 1;

Figure 13 shows a cross sectional view of the electrical box of Figure 12 taken along line B-B;

Figure 14 shows a cross sectional view of the electrical box of Figure 12 taken along line C-C;

Figure 15 shows an orthogonal view of a spline in accordance with the invention;

Figure 16 shows the spline of Figure 15 fully engaged with the electrical box of Figure 1;

Figure 17 shows a pair of electrical boxes before insertion of the splines of Figure 15 in accordance with the invention;

Figure 18 shows the pair of electrical boxes of Figure 17 after insertion of the splines of Figure 15;

Figure 19 shows a side elevational view of the electrical box mounting frame in the resting position;

Figure 20 shows a side elevational view of the electrical box mounting frame of Figure 19 in the retaining position;

Figure 21 is a top plan view of the electrical box mounting frame of Figure 19;

Figure 22 is a cross sectional view of the electrical box mounting frame of Figure 21 taken along line D-D;

Figure 23 is a top plan view of the electrical box mounting frame of Figure 20;.

Figure 24 is a cross sectional view of the electrical box mounting frame of Figure 23 taken along line D-D;

Figure 25 shows an orthogonal view of the electrical box mounting frame for the pair of electrical boxes of Figure 17;

Figure 26 shows an orthogonal view of an electrical box mounting frame and mounting bracket in accordance with the invention;

Figure 27 shows an exploded view of an electrical box and connection components in accordance with the invention;

Figure 28 shows an orthogonal view of the electrical box and assembled connection components of Figure 27 before installation into the mounting frame of Figure 19;

Figure 29 shows a left side elevational view of the electrical box of Figure 1 fully engaged in the mounting frame;

Figure 30 shows an orthogonal view of all components of a preferred electrical box system in accordance with the invention;

Figure 31 shows an orthogonal exploded view of the combination of the pair of electrical boxes of Figure 17 and mounting frame of Figure 25 in accordance with the invention;

Figure 32 is an exploded view of a male connector module in accordance with the invention;

Figure 33 is an exploded view of a female connector module in accordance with the invention;

Figure 34 shows an orthogonal view of the female connector module of Figure 33, illustrating the bottom side;

Figure 35 shows an orthogonal view of the male connector module of Figure 32, illustrating the bottom side;

Figure 36 is an exploded view of a female plug unit in accordance with the invention;

Figure 37 is an exploded view of a male plug unit in accordance with the invention;

Figure 38 shows an orthogonal view of the assembled male and female plug units of Figures 36 and 37;

Figure 39 shows an exploded view of a female plug module of a fixture receptacle base in accordance with the invention;

Figure 40 shows an exploded view of a male connector module of a fixture receptacle base in accordance with the invention;

Figure 41 shows an orthogonal view of a single fixture receptacle base in accordance with the invention;

Figure 42 shows an orthogonal view of male and female rectangular prongs with wire trap in accordance with the invention;

Figure 43 shows an orthogonal view of male and female round prongs with wire trap in accordance with the invention;

Figure 44 is a top plan view of the female rectangular prong with wire trap of Figure 42;

Figure 45 is a cross sectional view of the female round prong with wire trap of Figure 43 taken along line G-G;

Figure 46 shows a cross sectional view of the male connector module of Figure 35 inserted with female prongs of Figures 42 and 43, taken along line F-F;

Figure 47 shows a cross sectional view of the female connector module of Figure 34 inserted with male prongs of Figures 42 and 43, taken along line E-E;

Figure 48 is an enlarged cross-sectional view of Figure 46, showing a wire in the un-inserted and inserted positions;

Figure 49 shows an orthogonal view of male and female rectangular prongs with wire trap in accordance with an alternate embodiment of the invention;

Figure 50 shows an orthogonal view of male and female round prongs with wire trap in accordance with an alternate embodiment of the invention;

Figure 51 is a top plan view of the female round prong with wire trap of Figure 50;

Figure 52 is a cross sectional view of the female round prong with wire trap of Figure 50 taken along line H-H;

Figure 53 shows a cross sectional view of the male connector module of Figure 35 inserted with female prongs of Figures 49 and 50, taken along line F-F in accordance with an alternate embodiment of the invention;

Figure 54 shows a cross sectional view of the male connector module of Figure 34 inserted with male prongs of Figures 49 and 50, taken along line E-E in accordance with an alternate embodiment of the invention;

Figure 55 is an enlarged cross-sectional view of Figure 53, showing a wire in the un-inserted and inserted positions;

Figure 56 Shows the electrical wiring system of the invention used in a building floor-plan; and

Figure 57 is an elevated top view of male connector bodies with different prong orientations;

DETAILED DESCRIPTION OF THE INVENTION

In the preferred embodiment, the electrical box and mounting frame combination as shown in Figure 1 includes an electrical box **10** and a mounting frame **200** for insertion into a wall opening as will be further described in detail below. The mounting frame **200** includes wall engaging means such as securing flaps **203** which lock the frame in a wall panel or wall board in their retaining position as shown in Figure 1. The flaps **203** are automatically forced into and maintained in the retaining position by the electrical box in the assembled condition of the electrical box and frame combination.

The electrical box **10** shown in Figures 1 to 6 consists of a main rectangular enclosure **11** for the installation of an electrical socket, switch or other electrical connection or outlet, or a voice, data, video, or audio connection, in the following generally referred to as a "functional insert". A connector box **12** is attached to the rear of the enclosure **11** for installation of a fixture receptacle into receptacle housing **24**. Screw receiving bores **13** are provided in the enclosure **11** for the installation of a functional insert. Screw grooves **23** are provided to accommodate screws of various lengths that may be inserted into screw receiving bores **13**. Screw apertures **15** in electrical box retaining tabs **14** can be used for securing electrical box **10** to a wall with standard fitting screws, if desired. Each side wall **17** of enclosure **11** has a pair of spaced apart parallel slits **16** that extend perpendicularly from the front face of the enclosure to a substantial depth, preferably half the total depth, most preferably three quarters of the depth of the enclosure **11**. Slits **16** create gaps in the side walls **17** thereby forming flexible side panels **19** for limited deflection in a direction perpendicular to the plane of side wall **17** and at a front end of the panel. Rectangular retaining studs **20** protruding from the outer surface of the flexible side panels **19**, serve to secure the electrical box **10** to the mounting frame **200** in the assembled condition as will be discussed in more detail below. Formed in the electrical box retaining tabs **14** are horizontal slots **25** that allow an aesthetic cover **2**, with complementing protrusions, to be placed over the face of electrical box **10** (see Figure 30).

In Figure 1, electrical box mounting frame **200** is rectangular in shape to accommodate electrical box **10**. The frame **200** includes a rectangular mounting flange **210** for resting against a wall surface (not shown) in an installed condition of the frame. The flange **210** has a central, rectangular opening **211** for insertion of the electrical box **10**. Side walls **202** of the frame **200** extend perpendicularly from an inward edge of the mounting flange **210** to engage the edges of a wall opening (not shown). The flange **210** includes top and bottom retaining tabs **205**. Side walls **202** of mounting frame **200** have openings **201** for engagement by rectangular retaining studs **20** that protrude from the flexible side panels **19** on the electrical box **10**. The positions of the openings **201** in both frame side walls **202** correspond to the locations

of the rectangular retaining studs **20**. The frame also includes a pair of securing flaps **203**, which are shown in Figures 22 and 24, in the resting and retaining positions respectively. Securing flaps **203** are respectively connected to the top and bottom inward edges **251** of mounting flange **210** via a swivel connection, in this embodiment a living hinge **250**. Each securing flap **203** consists of a pair of rectangular panels connected together to form a right-angled member. One rectangular panel has two screw apertures **252**. Screw apertures **204** in frame retaining tabs **205** coincide with screw apertures **15** in the retaining tabs **14** of the electrical box **10** and screw apertures **252** in the securing flap **203**, when the securing flaps are in the fully engaged position as shown in Figure 24. Securing flap **203** further includes reinforcing webs **212** (see Figures 20 and 23) for reinforcement of the angled connection of the two flap panels.

Following is a description of the use of the electrical box support frame **200** with the electrical box **10**. Reference should be made to Figures 1 and 19 to 24. The inner edge of the flange **210** of the mounting frame **200** can be used as a template to draw a rectangle on a wall panel, such as dry wall, to indicate the position of the electrical box **10**. Once the rectangle is cut out from the wall, the support frame **200** is inserted into the wall. The electrical box **10** can then be inserted into the support frame **200**. As the electrical box **10** is pushed into the support frame **200**, fins **21** on the top and bottom walls of the electrical box **10** (see Figures 4 and 6) engage the hinged securing flaps **203** of the support frame **200**. This action forces the securing flaps **203** to rotate about their respective hinges **250** until the right angled panel **213** of securing flap **203** is spaced apart and parallel to the retaining tab **205** of the mounting flange **210**. Now the dry wall **215** is sandwiched between the frame retaining tabs **205** and the securing flaps **203** (see Figure 24). The size of the panels **213** of the securing flaps **203**, and the force applied by the securing flaps **203** to the top and bottom edges of the wall opening are sufficient to reliably maintain the support frame **200** secured in the wall opening against tearing out. The side walls **202** maintain the orientation of the frame **200** in the wall opening. Removal of the mounting frame **200** from the wall opening is not possible without removal of the electrical box **10** or tearing out significant portions of the wall panel.

The same action of pushing the electrical box **10** into the support frame **200** will bring the rectangular retaining studs **20** into registration with the support frame openings **201**. The retaining studs **20** snap into the openings **201** and lock the electrical box **10** within the mounting frame **200**. The rectangular retaining studs **20** preferably have bevelled forward edges **22** to allow easier insertion of the electrical box **10** into the support frame **200**. The electrical box **10** is now firmly secured to the support frame **200**, which is firmly secured to the dry wall.

Although not required for a secure installation of the electrical box **10** and frame **200** combination into a wall opening, screws may be used to fasten the support frame **200** and electrical box **10** together via aligned screw apertures **252**, **204** and **15** in the securing flaps **203**, support frame **200** and electrical box **10** respectively. Tightening of the screw will draw the retaining tabs **205** and the securing flaps **203** towards each other against the dry wall, providing an additional securing force against the dry wall. Figures 29 and 30 show the electrical box **10** fully engaged with the mounting frame **200**.

Extraction of the electrical box **10** from the wall only requires forcing the two flexible side panels **19** of the electrical box towards one another while gently pulling the electrical box out. Forcing the flexible side panels **19** together disengages the retaining studs **20** from the openings **201** in the support frame **200** to allow the electrical box **10** to be extracted.

Unless the optional fastening screws are used, installation of the support frame **200** and the electrical box **10** in the wall will not require the use of any tools, other than the tool for creating an opening in the wall. Hence the installation and removal of the electrical box, for maintenance, upgrades or repairs, can normally be done without any tools.

Frequently, electrical outlets and switches are ganged together at a selected location for easier access and use. For this setup, the electrical box **10** also has a pair of spaced apart parallel connection grooves **18** integrated into each side wall **17** which can accommodate splines **400** (Figure 15) to allow multiple electrical boxes **10** to be adjacently coupled or ganged together in a row. The structure of connecting grooves

18 is best shown in Figures 12 and 14. Connecting groove **18** extends from the front to the rear of the main rectangular enclosure **11** with a shallow vertical taper, and has a cross-sectional T-shape. A recess **27** is formed in the wall of connection groove **18** near a rear portion the main enclosure box **11**. Figure 15 shows a spline **400** and Figure 16 shows an electrical box **10** with splines **400** inserted into its connection grooves **18**. Extending perpendicularly from spline flange **404** are two arms **401** connected together by bridge **402**. Arms **401** extend past bridge **402** to form outwardly directed hook shaped ends **403** for engaging a recess **27** in each connecting groove **18**. Spline **400** has an "I" shaped cross section where the arms **401** and the bridge **402** are formed of a corresponding size to interlock with connection grooves **18**. The inside edge of arm **401** tapers towards its outside edge, and the top and bottom edges of arm **401** taper towards each other, as the arm **401** extends rearward from spline flange **404**. The taper of top and bottom edges of bridge **402** follows the taper of the top and bottom edges of arm **401**. The form of the spline ensures its ease of entry into a pair of adjacently placed groove structures **18**, even when the adjacent groove structures **18** are not precisely aligned with each other.

To allow tight ganging of electrical boxes **10,** the positions of the retaining studs **20** on one of the flexible side panels **19** are shifted, or offset, from the positions of the retaining studs **20** on the opposite flexible side panel **19** of the electrical box **10**. Furthermore, recesses **26** (see Figure 7) in the flexible side panels **19** allow additional electrical boxes to be closely adjacently placed without the retaining studs **20** of adjacent boxes coming into contact with each other and interfering with the ganging allowed by the connection grooves **18**. Figures 17 and 18 show two electrical boxes **10** ganged together in a row before and after the splines **400** are inserted into the connection grooves **18** respectively. When the splines **400** are fully inserted into the connection grooves **18** and the hooked ends **403** engage recesses **27**, the two electrical boxes **10** are effectively locked together as a single unit. This allows for easier insertion of both electrical boxes **10** into a correspondingly shaped mounting frame.

In a preferred variant, the mounting frame **200** is constructed to receive two or more electrical boxes **10** in accordance with the previously mentioned ganging feature

of electrical box **10**. Figure 25 shows a mounting frame **200'** formed for a pair of ganged electrical boxes **10**, as shown in Figures 17 and 18. Mounting frame **200'** incorporates the same features as mounting frame **200**, and functions in the same manner as mounting frame **200**, to lock a ganged pair of electrical boxes within a wall opening. Of course, mounting frames **200'** of a construction adapted to house more than two ganged electrical boxes are also encouraged. To accommodate different wall thicknesses, the spacing between right angled panel **213** of the securing flap **203** and the frame retaining tab **205** of flange **210** is preferably adapted to correspond to a selected wall thickness, or to a spacing slightly larger than the selected wall thickness, to keep the support frame **200** secured in a wall opening against tearing out. Alternatively, inserts can be placed between right angled panel **213** of each securing flap **203** and the associated retaining tab **205**, to make up for any difference between a wall thickness that is smaller than the size of the securing flaps **203**. The panels that together form securing flap **203**, can form an angle that is less than or greater than 90 degrees. Although the hinges used in the preferred embodiment are living hinges, other types such as continuous hinges can be used and suitable hinge constructions will be readily apparent to the person skilled in the art.

In some locations or jurisdictions, electrical boxes cannot simply be fixed to a wall panel, but must be fastened to the wall supporting structure, such as wood or metal studs. To accommodate this requirement, the invention provides a mounting bracket **220** as shown in Figure 26. The mounting frame **200** preferably includes inwardly directed hook shaped ends **207** which are formed onto each side-wall **202** of the frame **200** to engage with the stud mounting bracket **220**. Mounting bracket **220** is a right angled member that will fit around a front corner edge of a wall stud **3**. Two screw openings **221** allow one end of the mounting bracket to be fastened to the stud **3**, preferably by wood screws **226**. The bracket has slots **225** for the mounting arms **206** to permit insertion of the arms **206** into slots **225** which correspond in cross sectional shape with mounting arms **206**. Openings **224** at the end of slots **225** accommodate the hooked ends **207** of the mounting arms **206** for locking of the arms in the slots **225**. Angled screw openings **222** allow complete fastening of the bracket **220** to the wall stud **3** from the other side of the support frame **200**, as in the case

when a wall has been secured to the wall stud which inhibits access to the bracket **220**. In practical use, screws are first used to secure the mounting bracket **220** to the wall stud **3** using screw openings **221**. The hooks of the mounting bracket arms **206** can easily pass through the slots **225** because the material of the mounting bracket **220** should be flexible enough to allow for play between the mounting bracket **220** and the wall stud **3**. Once the mounting frame **200** is fully inserted into the mounting bracket slots **225** and the hooked ends rest in hook openings **224**, screws can be used to fasten the mounting bracket **220** to the wall stud **3** via angled screw openings **222**. The mounting frame **200** is then effectively locked into the mounting bracket **220** because the hooked ends can no longer pass through the slots **225**.

Figures 27 to 31 sequentially depicts the assembly of the electrical box and system as they would be used with each other for installing a fixture receptacle into a wall opening in accordance with the invention. Figure 27 shows an electrical box **10** with a receptacle base **100**, male and female plug units **310**, **320** which will be described in more detail below, and dust cover **4** prior to complete assembly. Fixture receptacle base **100** is inserted into the connector box **12** of electrical box **10**. Receptacle base **100** provides an interface between the electrical power or signal input/output supply and a functional insert in the electrical box **10**. Plug units **310** and **320** supply or transfer power or signals to and from the receptacle base **100**. A dust cover **4** is added to cover the connector box **12** and any plug units that may be inserted into the receptacle base **100** inserted therein. Dust cover **4** preferably also secures plug units inserted into the fixture receptacle base from being torn out by resting against a rear end of the male and female plug units **310**, **320**. Figure 28 shows the electrical box of Figure 27 after completed assembly, prior to insertion into mounting frame **200**. Figure 29 illustrates the electrical box **10** fully inserted into the mounting frame **200** and Figure 30 shows the electrical box **10** having a functional insert **1**, inserted into a mounting frame **200**, which is secured to mounting bracket **220**. An aesthetic cover **2** snaps into place to cover the face of electrical box **10**. Figure 31 shows a pair of ganged electrical boxes **10** prior to insertion into a mounting frame **200'** and placement of a matching aesthetic cover **2'** according to an embodiment of the present invention.

Preferred embodiments of the present invention have been described, but variations in the electrical box **10** and mounting frame **200** are possible in light of the above teachings. Although connector receptacle housing **24** (see Figures 2-5) is preferably positioned at the bottom of the electrical box rear wall (Figures 4 and 5) for ease of insertion of the electrical box into the mounting frame **200** when wired from above, the receptacle housing can be positioned at any vertical location along the rear wall or can be fully integrated into the electrical box **10** and oriented such that the face of the receptacle housing **24** is parallel to the face of main enclosure **11**. Receptacle housing **24** can also be open laterally or downwardly. Although slits **16** preferably extend from the face of main box **11** at right angles, angles other than 90 degrees are possible, as long as the slits extend to a depth sufficient to form flexible side panels in the side walls **17**. Separate panels can be connected to the side walls **17** with spring loaded hinges in place of the preferred integrally formed flexible side panels. To prevent dust entering the electrical box **10**, the slits are preferably narrow, however slits formed as wide gaps, and more than two slits **16** can be formed in each side wall **17** to form multiple flexible side panels **19**. In the case of multiple flexible panels, a single retaining structure is preferably formed on each flexible panel **19**, whereby the retaining structure is formed as openings instead of retaining studs **20** in the side wall **17**. The retaining structure can be formed as a single or multiple number of openings instead of the preferred protruding studs. The flexible panel and retaining structures can be formed on the top and bottom of the electrical box instead of the side walls **17**. Recesses **26**, or portions of the recesses in side wall **17**, can be openings to further facilitate the ganging feature of the electrical boxes **10**. Connection grooves **18** and corresponding spline arms **401** can have a circular or other geometric shape as long as the shape of the connecting grooves **18** is sufficiently complementary to the shape of the spline arms **401** to assure a reliable connection.

In an alternate embodiment of the mounting frame **200**, flange **210** does not form a full rectangle, but instead only includes four corners. Although the securing flaps **203** are preferably positioned at the top and bottom edges of the mounting frame **200**, they can be positioned along any two opposite sides of the frame and can even be

positioned on all sides of the frame. The size of securing flaps **203** can be shorter than an edge of the rectangular opening **211** it is connected to, or a multiple number of individually operative securing flaps **203** can be connected to an edge of the rectangular opening **211** in place of a single large securing flap. Securing flaps **203** can slide on rails to engage a wall opening when the electrical box **10** is inserted into the mounting frame. Side walls **202** do not form a continuous wall, but instead are formed as short segments at locations corresponding to positions of the electrical box retaining structures to reduce the use of material. The mounting frame of an alternate embodiment can be constructed to receive standard prior art metal electrical boxes.

In addition to the electrical box assembly, the present invention also provides a modular wiring system for fail-safe wiring connection of the electrical box and the functional insert respectively placed therein with a power, data, signal supply or control, or a data, power, signal, etc. consumer or controller. To avoid wiring errors, the wiring system of the invention provides male and female plug assemblies for permanent placement of wire or cable ends as will be further described in detail in the following. Furthermore, the shape and placement of the connector prongs in the plugs and the connector receptacle in the electrical box is keyed accordingly to the intended type of connection to prevent cabling errors.

The modular system of the invention includes male and female receptacles and male and female plugs, whereby the number of components of the system is reduced by the use of common components for both plugs and receptacles as well as male and female plugs. As is apparent from Figures 36 to 41, each receptacle includes a receptacle base (Figures 39 and 40) and male and female connector modules **300**, **301**. Furthermore, each plug unit (Figures 36 and 37) includes a plug housing **170**, **190** and one of the male and female connector modules **300**, **301**. The male connector modules in the plugs and receptacles are thereby of identical construction as are the female connector modules in the plugs and receptacles. Each male connector module **300** is constructed to interlock with a female connector module **301** as shown in Figure 38. Each connector module **300**, **301** includes a connector base **150**, a set of male prongs **142**, **143**, or female prongs **122**, **123**, and either a male connector body

120 or a female connector shroud **140**. The same connector base **150** is used for the male and female receptacles and the male and female plugs. Thus the complete modular system includes a reduced number of parts, which in the basic embodiment are, a connector base **150**, a male connector body **120**, a female connector shroud **140**, male and female plug housings **170**, **140**, a receptacle base **150** and male and female prongs **142**, **143**, **122**, **123**.

To avoid wiring or connection errors, the orientation of the contacts in the connector base **150** and the male connector body **120** are varied for different types of connections and different wiring schemes. This provides a keyed wiring and connector system as will be described in more detail further below.

Figure 32 shows an unassembled male connector module **300** with a corresponding male connector body **120** and a connector base **150**. Figure 33 shows an unassembled female connector module **301** with a corresponding plug shroud **140** and a connector base **150**. The male connector module **300** includes the male connector body **120**, the connector base **150**, three generally rectangular female prongs **122** and a generally round prong **123**. The male connector body **120** includes a cap shaped main body **126** having a triangular cross-section and a keying groove **121**. The male connector body **120** has a circumferential shoulder or base **124**, which also has a keying groove **127**, and overall has a slightly larger outline than the cap shaped main body **126** of the connector body **120**. Fixed to the perimeter of base **124** are locking tabs **125** for interlocking the base **124** with a complementary component as will be described further below. Openings **128** and **129** in the face of male connector body **120** are sized to receive the male prongs of a complementary female connector module as described below. Openings **151** in the face of connector base **150** are formed to receive the base of the female prongs **122** and **123** which is of identical construction for each prong and functions as a wire trap as will be described further below. The close fit of the prong bases in openings **151** ensures proper alignment of the female prongs **122** and **123** with the openings **128** and **129** respectively. Recess **152** is formed to accommodate retaining clips, which will be discussed later. The keying grooves **121** and **127** ensure that the male connector body

120 cannot be engaged with a complementary female connector module (discussed further below) in more than one orientation.

The female connector module **301** includes a female plug shroud **140** having an equilateral triangle shaped sleeve comprising a keying groove **141** extending inwardly, three rectangular male prongs **142** and one round male prong **143**. All of said prongs are recessed at the base **144** of the female plug shroud **140**. The shroud base **144** also has an inwardly directed keying groove **147**. The length of the prongs is fixed such that their tips remain below the top edge of the main body **146** of the shroud **140**. The shroud main body **146** is essentially a protective sleeve for the prongs **142** and **143**. Fixed to the perimeter of the shroud base **144** are locking tabs **125** for interlocking the shroud base **144** with a complementary component. Openings **151** in the face of connector base **150** are formed to receive the base of the male prongs **142** and **143** to ensure proper alignment of the male prongs **142** and **143** with corresponding openings in the base of shroud **140** (not shown). To further reduce the number of elements of the modular system of the invention, openings **151** in the face of connector base **150** are of the same size and orientation for both the male and female connector module of complementary connectors, and the bases of all female prongs and male prongs used are preferably of identical construction to reduce the number of components of the system and for ease of assembly.

Figures 34 and 35 show the assembled male connector module **300** and female connector module **301** respectively. Wiring access holes **108** are formed through the bottom of the connector bases **150** to allow insertion of wires that will be electrically coupled to the prongs encased within the modules. The detailed construction of the prongs will be discussed in more detail later.

The male connector body **120** and the female plug shroud **140** have been designed to be complementary units. The cap shaped main body **126** is smaller than the main body **146** of the female plug shroud **140** so that the male connector body can be inserted into the female plug shroud **140**. The male plug keying groove **127** is wider and deeper than the female plug shroud keying groove **147**. The lengths of the

main bodies and the perimeters of the bases are also the same so that engagement with the single type connector base **150** is possible.

Figure 36 shows an unassembled female plug unit **320** with a corresponding female connector module **301** and a female plug casing **190**. Figure 37 shows an unassembled male plug unit **310** with a corresponding male connector module **300** and a male plug casing **170**. Male plug casing **170** has an equilateral triangle shape and includes a rim **171** for receiving the base **124** of male connector body **120** and having openings **107** placed and shaped for receiving the locking tabs **125** on base **124** in the assembled condition of the male connector module **300**. During assembly, locking tabs **125** snap into openings **107** to hold the plug module **300** in the plug casing **170**. A wire feed opening **172** is provided in the back of the male plug casing **170** for connection of wires to the male connector module **300**. A male hook element **173** is formed on the male plug casing **170** at a location corresponding to the position of the keying groove **121** of the cap shaped main body **126**, and extends into that keying groove in the assembled condition of the male connector module **300**. Male hook element **173** has a hook **178** at a free end and is connected at its opposite end to the male plug casing **170**, and has a disengagement button **177**. Pressing down on the button will force the hook element **173** inwardly in the grooves **121** and **127**.

Female plug casing **190** is identical to the male plug casing **170** except for the female hook element **191**, which replaces the male hook element **173**. Female plug casing **190** accommodates base **144** of a female plug shroud **140** through locking engagement of base **144** with rim **171** and especially locking tabs **125** with openings **107**. The female hook element **191** includes a loop **192** at one end, and a lever **193** at its opposite end. At an intermediate location, the hook element is pivotally connected to the female plug casing **190**. Pressing down on lever **193** will force the hook element **191** to move away from base **144** and the grooves **141** and **147** therein. The connector bases **150** of the male connector module **300** and female connector module **301** are sized to fit inside their respective plug casings.

In practical use, using a male plug casing **190** and male connector module **300** by example, a cable containing wires is drawn through the wire feed opening **172**, after which stripped wire leads are inserted into the openings **108** in the base **150** of the pre-assembled male connector module **300** (see Figure 48). The connector module **300** is then snapped into the plug casing **190** to form an assembled male plug unit **310**. A plastic material is injected into the male connector **300** via wire feed opening **172** to provide additional electrical insulation and to prevent the cable from tearing out from the male connector **300**.

Fully assembled male and female plug units are shown in Figure 38. Male plug unit **310** with male plug casing **170** and male connector module **300** can be inserted into any female plug unit **320** with female plug casing **190** and female connector module **301**. The male hook element **173** will automatically interlock with the female hook element **191** to hold the male and female plug units together.

The male plug unit **310** can also be inserted into a female connector module **301** that is mounted inside a receptacle base **100**. The male hook element **173** will thereby automatically lock with a female retaining clip **103** inserted into the receptacle base **100**, to hold the male plug unit **310** in place. Similarly, the female plug unit **320** can be inserted into a male connector module **300** that is mounted inside a receptacle base **100**. The female hook element **191** will thereby automatically lock with a male retaining clip **102** inserted into the receptacle base **100**, to hold the female plug unit **320** in place.

Figures 39 and 40 show receptacle bases **100** with an assembled female connector module **301** and an assembled male connector module **300** respectively. Receptacle base **100** contains two, equilateral triangular shaped recesses **101**, each of which can accommodate either a male connector module **300** or a female connector module **301**. Foot **109** of female retaining clip **102** for the male connector module **300**, or foot **110** of the male retaining clip **103** for the female connector module **301** fits into the recess **152** in the connector base **150** of the male or female connector module, and is locked in a recessed side pocket **105** in the side wall of each triangular

recess **101**. When connector module **300** or **301** is snapped into the recess **101** with the foot **109** of a retaining clip **102** or **103** inserted into recess **152**, the retaining clip is effectively locked into position in the side pocket **105** and prevented from being pulled out. Flexible tabs **106** are formed at each corner of the receptacle base **100** and flare outwards from the base towards the top of the receptacle base. The design allows for easy insertion of the receptacle base **100** into receptacle housing **24** of the electrical box **10** (see Figure 27). But once the receptacle base **100** is inserted, the base locking tabs **106** will lock the receptacle base **100** into place. Openings **107** accommodate the locking tabs **125** of either the male connector module **300**, or female connector module **301** respectively, to hold the modules in place within the recess **101** once they are inserted. Coupling of wires to the connector modules **300** or **301** is done via a special self-gripping wire trap **160**, which will be discussed in more detail below.

Figure 27 illustrates a receptacle base **100** with fully assembled male and female connector modules before installation in the electrical box **10**. The male connector module can receive power or other signals for distribution to an installed functional insert or device, while the female connector module can be an output to redistribute the power. This allows multiple electrical boxes **10** to be connected in a daisy chain configuration, which uses less wiring cost than conventional methods in which each electrical box is wired separately, manually and often receives a power feed wire from the ceiling. If it becomes necessary to remove an electrical box from the wall for maintenance, the male and female plug units only need to be connected together so that the other electrical boxes connected in the chain can still receive power. The fixture receptacle base **100** of Figure 39 illustrates one possible configuration for the arrangement of the recesses **101**. A single recess receptacle connector can be formed as shown in Figure 41, as can receptacles with multiple recesses arranged in a circular configuration around a single round ground prong such as male prong **123** or female prong **143**. For example, by using equilateral shaped connector modules, it is possible to have a receptacle with six different corresponding triangular recesses, with respectively different prong orientations, each for a different wiring application, such as power, high voltage, low voltage, telephone, data etc.

The use of the modular connectors as previously described allows for quick and simple connection of power or other signals to the electrical box **10**. The shaped connector modules prevent incorrect connection of the plugs into their receptacles. All components of the modular system described above are commercially available from Electec Ltd., Ottawa, Ontario.

Connection to the prongs within connector modules **300** and **301** is achieved by way of self-gripping wire traps **160** formed on the base of male prongs **142** and **143**, and female prongs **122** and **123** as shown in Figures 42 and 43. Each self-gripping wire trap **160** is a stamped piece of metal preferably made of an alloy consisting of phosphor and bronze (available from Electec Ltd.), and consists of a bottom plate **161** and a top plate **162**, connected to an edge of bottom plate **161** by a curved spring segment **163**. The top and bottom plates are substantially parallel to each other. Side edges of bottom plate **161** have been bent up towards the top plate **162** to form curved partial side-walls **164**. An end portion of the top plate **162**, opposite to the edge attached to the spring segment **163**, has been folded down towards the bottom plate **161** to form a gripping tab **165**. The size of the top plate **161**, the bottom plate **162** and the spring segment **163** has been selected, for example, to be large enough to accommodate commonly used American 8 to 16 gauge copper wires **5**. The position of the spring segment **163** is centred about the edges of the top and bottom plates **161** and **162** to allow insertion of a wire to each side of the spring segment. The side-walls **164** serve to keep inserted wires within the wire trap **160** and below the associated gripping tab **165**. Top plate **161** is preferably angled downwards towards the bottom plate **162** to form a slight wedge with bottom plate **162** as shown in Figure 44. This is to allow the wire trap **160** to be inserted into correspondingly sized openings **151** of connector base **150**. Figure 48 shows a cross-section of a portion of male connector module **300** before and after a wire **5** is inserted into wiring access holes **108** to engage wire trap **160**. When wires **5** are inserted into the wire trap **160** as shown in Figure 48, they will engage and force open the gripping tab **165** to allow entry of the wires. The size of opening **151** of connector base **150** will limit the deflection of top plate **161**, allowing gripping tabs **165** to squeeze the wire with a force such that the tab edges will dig into the metal of the wires. Once inserted, the

wires are secured from accidental removal from the prongs within the connector modules. Since wires can be of different gauges, a single gripping tab **165** would not be effective in gripping both a smaller gauge wire and a larger gauge wire. This problem is solved by introducing slit **166** cut in the centre of gripping tab **165** to essentially create two separately operating gripping tabs that can individually engage wires of varying gauges. The wire trap **160** of this embodiment will function best when the size of openings **151** in the connector base **150** are formed to closely correspond to the size of the wire trap **160**. If the openings **151** are too large, wire trap **160** may not grip inserted wires with sufficient force to prevent them from being accidentally torn out when the spring segment **163** creates only a low spring force.

An alternate embodiment of the wire trap **160** is shown in Figures 49 to 52, where the side-walls **164'** of wire trap **160'** are formed to partially wrap around the top plate **161'**. Wire trap **160'** with side walls **164'** is not tolerant on the size of openings **151** in connector base **150**. The side-walls **164'** limits the deflection of top plate **161**. As shown in Figure 55, openings **151'** are much larger than the wire trap **160**, but since the side walls **164'** limits the deflection of top plate **161'**, the inserted wire **5** will be gripped with sufficient force to prevent it from being accidentally torn out.

The components of the electrical box wiring system previously described are preferably used together to wire a building, or edifice, in a reduced amount of time while ensuring error free connections to advance completion of the building or edifice construction. Components of the electrical wiring system of the present invention are used to distribute power and signals via wiring cables and distribution boxes throughout the building **500** shown in the layout of Figure 56. By using the wiring system of the present invention, many different keyed connector modules can be employed to provide error free connection of a power, data or telephone signal source to corresponding destinations. By varying the orientation of the rectangular male and female prongs **142**, **143** and **122**, **123** and the associated openings **128** in male connector body **120** and recesses **151** in connector base **150**, virtually infinite numbers of different keyed connector modules can be produced. It is thereby possible

to vary the position of only one, two or all three rectangular prongs. If the position of a prong is changed, the orientation of the prong is rotated 45° or 90° from the default position as shown in Figures 32, 33, 36 and 37. Although this limits the overall number of configurations possible, a large number of permutations can still be achieved while each prong orientation is sufficiently different from every other so that reliable keying is achieved with substantially no possibility of male and female connector modules of different prong orientations fitting together. Examples of different prong orientations are shown in Figure 57. Thus, a fool proof wiring system is provided, wherein not only keyed wires of different power, data or telephone supplies can be produced having plug and receptacle ends that will respectively not fit together with wires of other supply types, but also keyed wires for different tasks within each supply system. For example, wires connecting a power, data or telephone source with an outlet, with a switch and with a distribution box respectively or a switch with an outlet, a switch with another switch, an outlet with another outlet, etc. are possible applications. This will be better understood with reference to the building wiring system **500** shown in Figure 56. A first type of wire **510** having a first gage is used to connect the high voltage power supply panel **512** with the fluorescent light fixtures **514**. First set of keyed male and female connector modules are used on the wires **510** interconnecting the panel **512**, the distribution boxes **513** and the fixtures **514**, and a second set is used to interconnect the fixtures **514** and the associated wall switch **516**. A second type of wires **520** with third and fourth sets of keyed male and female connector modules are used to interconnect the emergency lighting power panel **522** with the light fixture **524**, distribution box **525** and exit signs **526**. A third set of wires **530** with fifth, sixth, seventh and eighth sets of keyed male and female connector modules are used to interconnect the general power supply panel **532**, the lighting fixtures **534**, plugs **536**, switches **538** and distribution boxes **539**. A fourth set of wires **540** with ninth, tenth and eleventh keyed male and female connector modules are used to interconnect the data supply panel **542**, the data outlets **544** and the distribution boxes **546**. Finally, a set of phone wires **550** with twelfth, thirteenth and fourteenth keyed male and female connector modules is used to interconnect the telephone board **552**, the phone plugs **554** and the distribution boxes **556**. The sets of first to fourteenth connector modules are identical in construction

except for the orientation of their rectangular prongs. The orientation of the prongs in each set is selected such that the respective male and female connector modules of the same set can be connected with one another but not with any other module of any other set. In this way, a fool proof wiring system is achieved which ensures quick and proper wiring of any building.

Applications for the mounting frame and quick connecting universal electrical box include commercial buildings, home or cottage for the distribution and connection of power or data such as telephone or computer network signals.

Claims

1. Electrical box mounting system, comprising

an electrical box for receiving a functional insert; and

a mounting frame for insertion into a wall opening for an electrical box;

the mounting frame having a body being shaped and constructed for receiving the electrical box, and having locking means for locking the mounting frame in the wall opening, the locking means being movable from an inactive position wherein the mounting frame is insertable into the wall opening to a locking position wherein the locking means retain the mounting frame in the wall opening, whereby the locking means are forced into the locking position upon insertion of the electrical box into the mounting frame.

2. Electrical box mounting system as defined in claim 1, wherein the functional insert is a power or data consumer or controller.

3. Electrical box mounting system as defined in claim 1, wherein the locking means are rotatable between the inactive and locking positions.

4. Electrical box mounting system as defined in claim 1, wherein the electrical box is a conventional electrical box for receiving one of an electrical outlet and a switch.

5. Electrical box mounting system as defined in claim 1, wherein the locking means are rotatable between the inactive and locking positions for releasably locking the mounting frame in the wall opening.

6. Electrical box mounting system as defined in claim 1, wherein the mounting frame has a wall surface engaging flange and a rim depending therefrom and extending in the direction of a wall thickness, the locking means being attached to the depending rim.

7. Electrical box mounting system as defined in claim 6, wherein the locking means are rotatably attached to the depending rim.

8. Electrical box mounting system as defined in claim 7, wherein the mounting frame is shaped and constructed for installation into a wall panel including the wall opening, the depending rim extending perpendicularly from the flange and having a depth at least equal to the thickness of the wall panel.

9. Electrical box mounting system as defined in claim 8, wherein the depending rim has a front edge attached to the flange and an opposite rear edge, the locking means being attached to the rear edge of the depending rim.

10. Electrical box mounting system as defined in claim 9, wherein the mounting frame is rectangular and the depending flange includes a pair of opposite wall sections, the locking means being attached to the wall sections.

11. Electrical box mounting system as defined in claim 10, wherein the wall sections are top and bottom wall sections respectively positioned at the top and bottom ends of the mounting frame when the frame is installed in the wall opening.

12. Electrical box mounting system as defined in claim 11, wherein the locking means are a pair of U-shaped claws rotatably affixed to the top and bottom wall sections, the claws having a pair of spaced apart legs, the spacing therebetween being equal to the thickness of the wall panel.

13. Electrical box mounting system as defined in claim 6, wherein the locking means are attached to the depending rim be an intermediate living hinge.

14. Electrical box mounting frame for retaining an electrical box in a wall opening, comprising:

a body being shaped and constructed for receiving the electrical box, and

locking means for locking the mounting frame in the wall opening, the locking means being movable from an inactive position wherein the mounting frame is insertable into the wall opening to a locking position wherein the locking means retain the mounting frame in the wall opening, whereby the locking means are

forced into the locking position upon insertion of the electrical box into the mounting frame.

15. Electrical box mounting frame as defined in claim 14, wherein the locking means are rotatable between the inactive and locking positions.

16. Electrical box mounting frame as defined in claim 15, wherein the electrical box is a conventional electrical box for receiving one of an electrical outlet and a switch.

17. Electrical box mounting frame as defined in claim 16, wherein the locking means are rotatable between the inactive and locking positions for releasably locking the mounting frame in the wall opening.

18. Electrical box mounting frame as defined in claim 17, further comprising a wall surface engaging flange and a rim depending therefrom and extending in the direction of a wall thickness, the locking means being attached to the depending rim.

19. Electrical box mounting frame as defined in claim 18, wherein the locking means are rotatably attached to the depending rim.

20. Electrical box mounting frame as defined in claim 19, wherein the mounting frame is shaped and constructed for installation into a wall panel including the wall opening, the depending rim extending perpendicularly from the flange and having a depth at least equal to the thickness of the wall panel.

21. Electrical box mounting frame as defined in claim 20, wherein the depending rim has a front edge attached to the flange and an opposite rear edge, the locking means being attached to the rear edge of the depending rim.

22. Electrical box mounting frame as defined in claim 21, wherein the mounting frame is rectangular and the depending flange includes a pair of opposite wall sections, the locking means being attached to the wall sections.

23. Electrical box mounting frame as defined in claim 22, wherein the wall sections are top and bottom wall sections respectively positioned at the top and bottom ends of the mounting frame when the frame is installed in the wall opening.

24. Electrical box mounting frame as defined in claim 23, wherein the locking means are a pair of U-shaped claws rotatably affixed to the top and bottom wall sections, the claws having a pair of spaced apart legs, the spacing therebetween being equal to the thickness of the wall panel.

25. Electrical box mounting frame as defined in claim 19, wherein the locking means are attached to the depending rim by an intermediate living hinge.

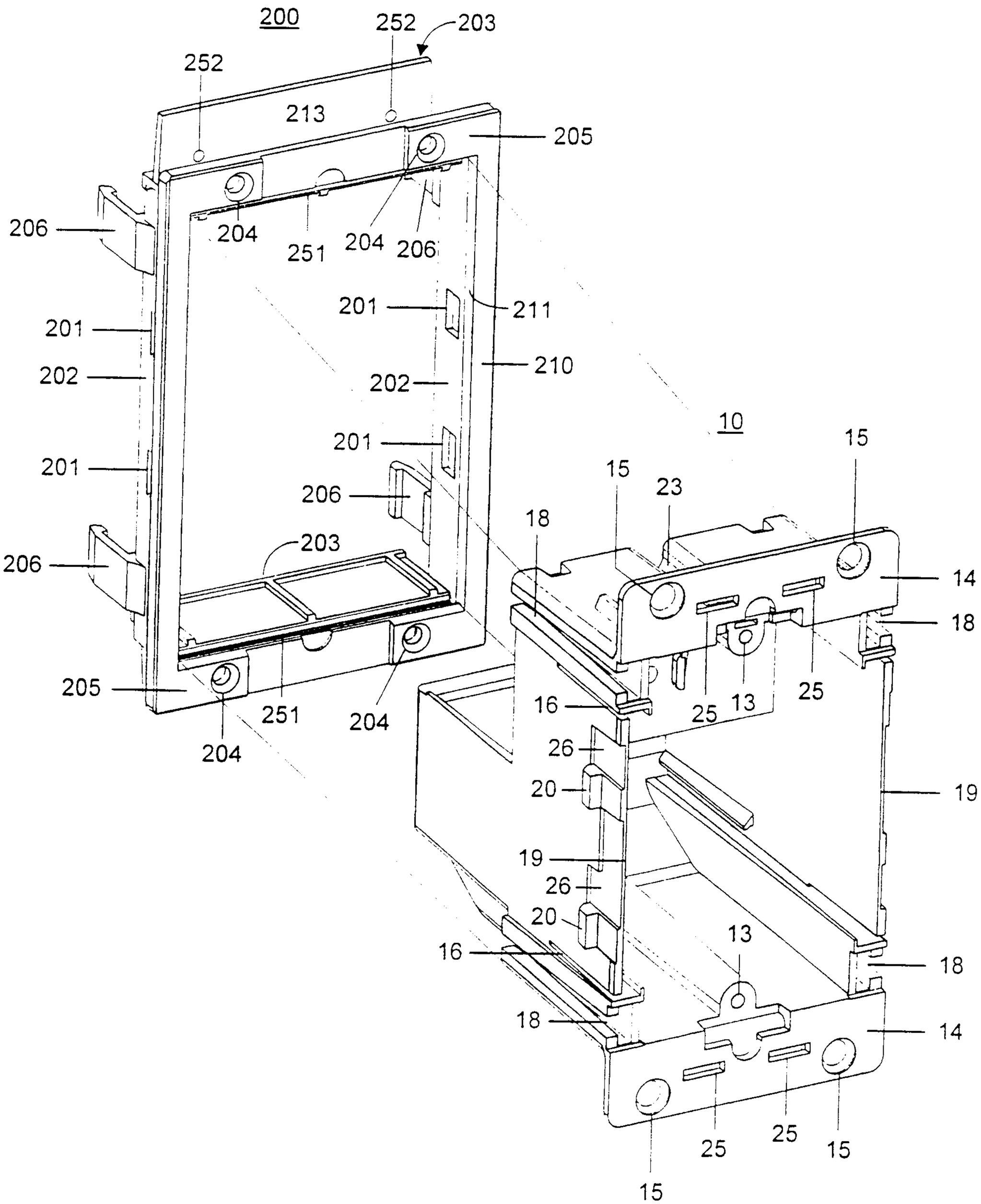
200
252
203
252
213
205
206
204
251
204
206
201
211
201
210
202
202
201
201
206
206
203
205
251
204
204
10
15
15
23
18
14
18
25
13
25
16
26
20
19
19
26
20
13
16
18
18
14
25
25
15
15

Figure 1

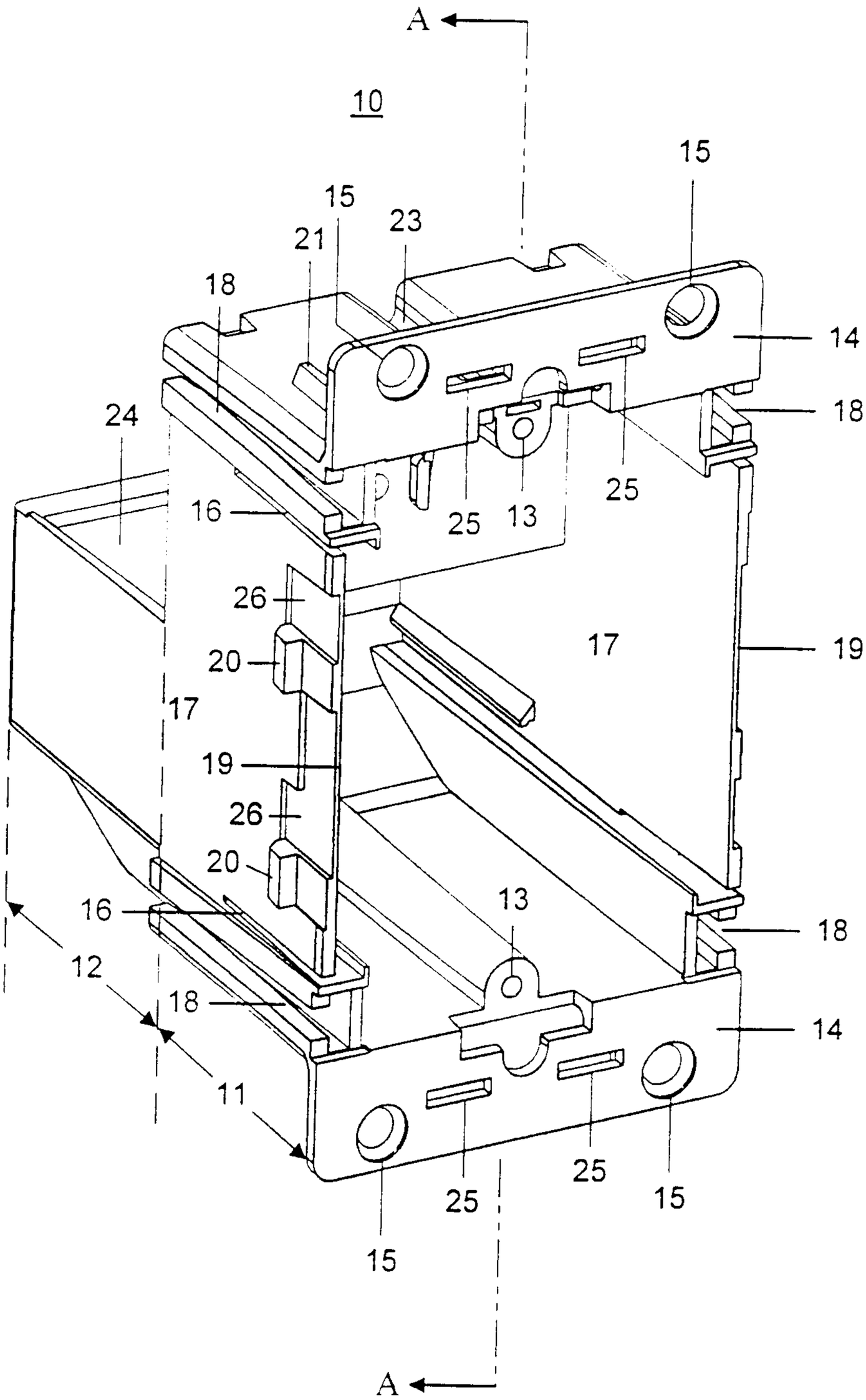
A
10
15
21
23
18
14
24
18
25
13
25
16
26
17
19
20
17
19
26
20
16
13
18
12
18
14
11
25
25
15
15
A

Figure 2

10

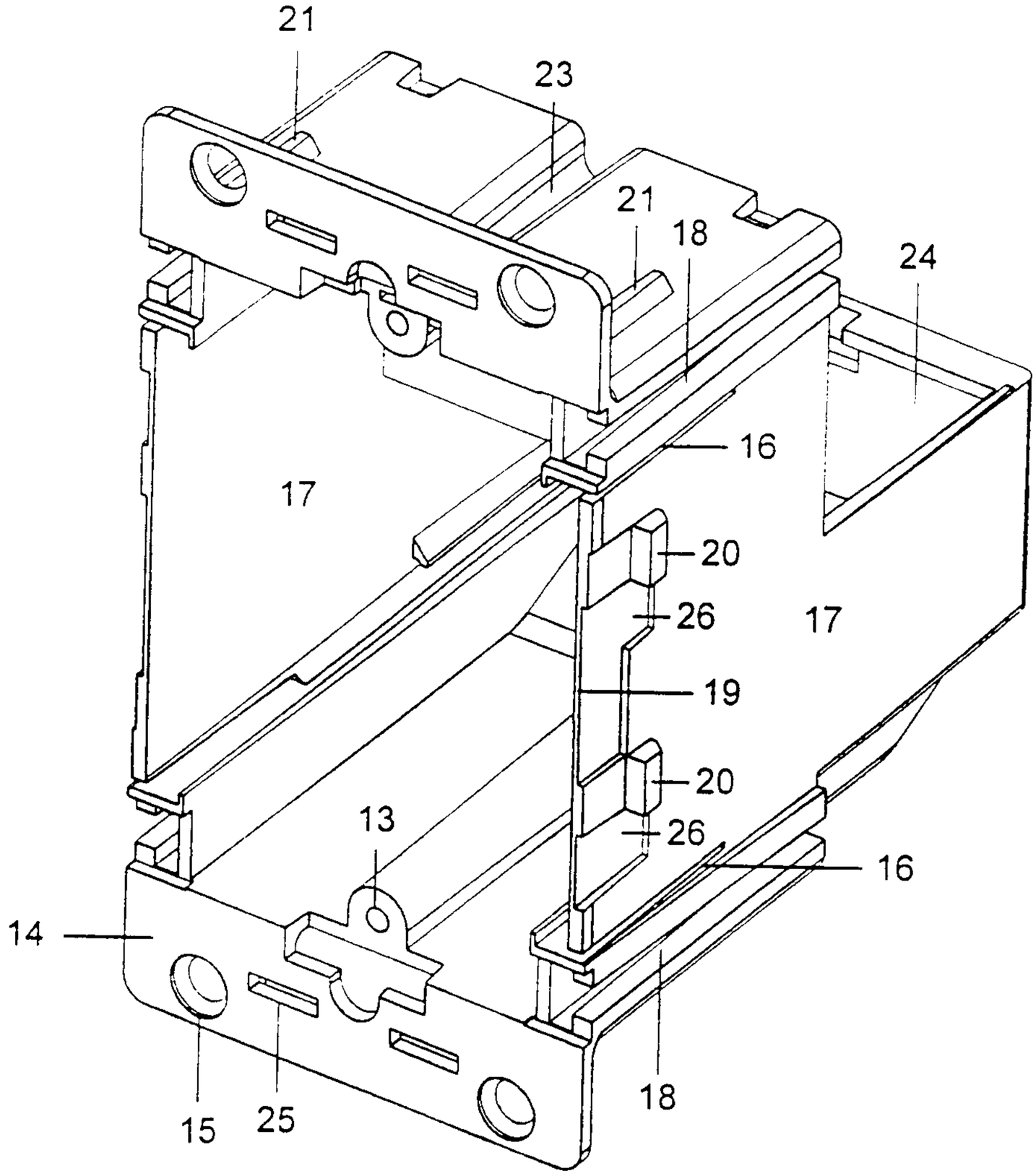

Figure 3

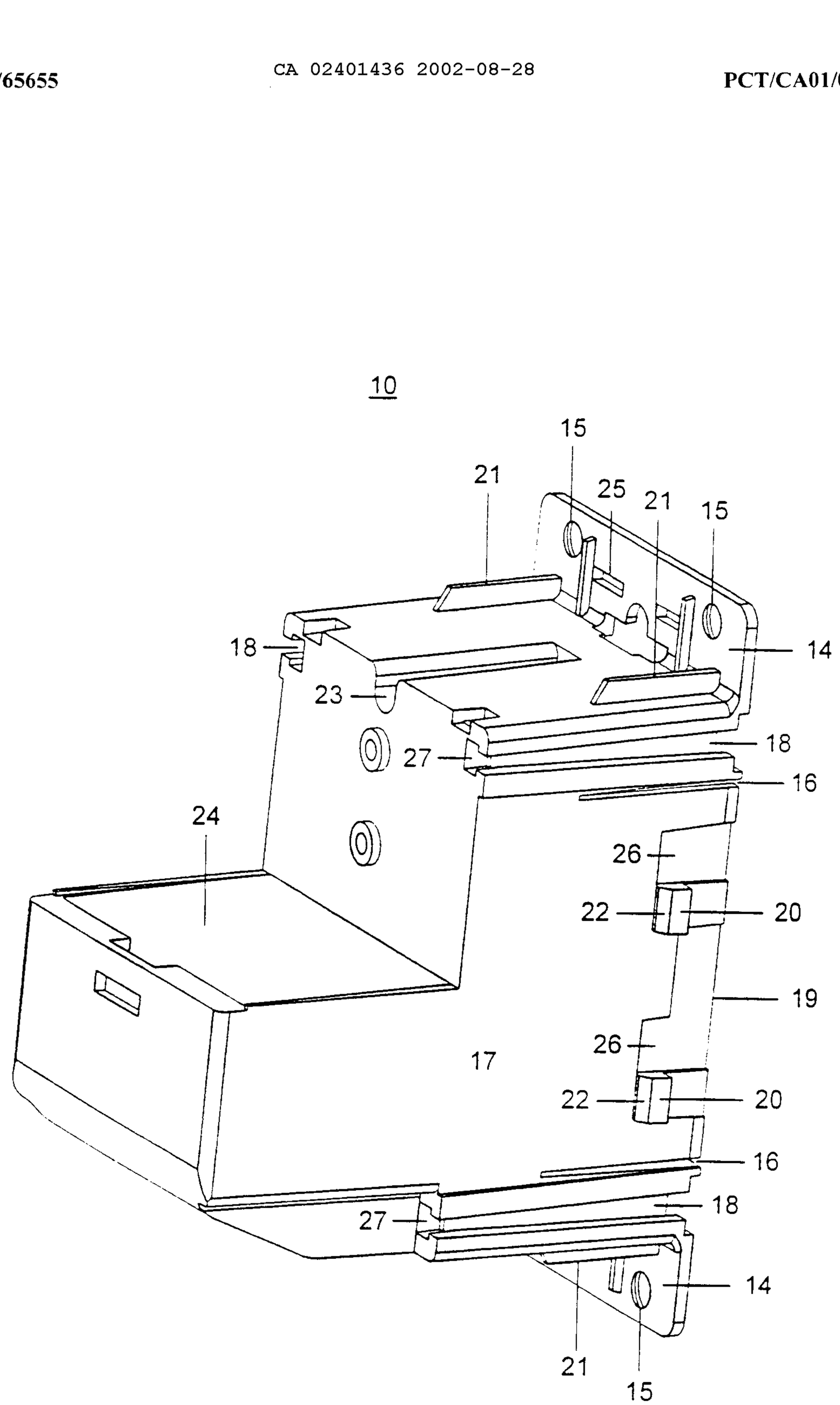
10
15
21
25
21
15
18
14
23
18
27
16
24
26
22
20
19
26
17
22
20
16
18
27
14
21
15

Figure 4

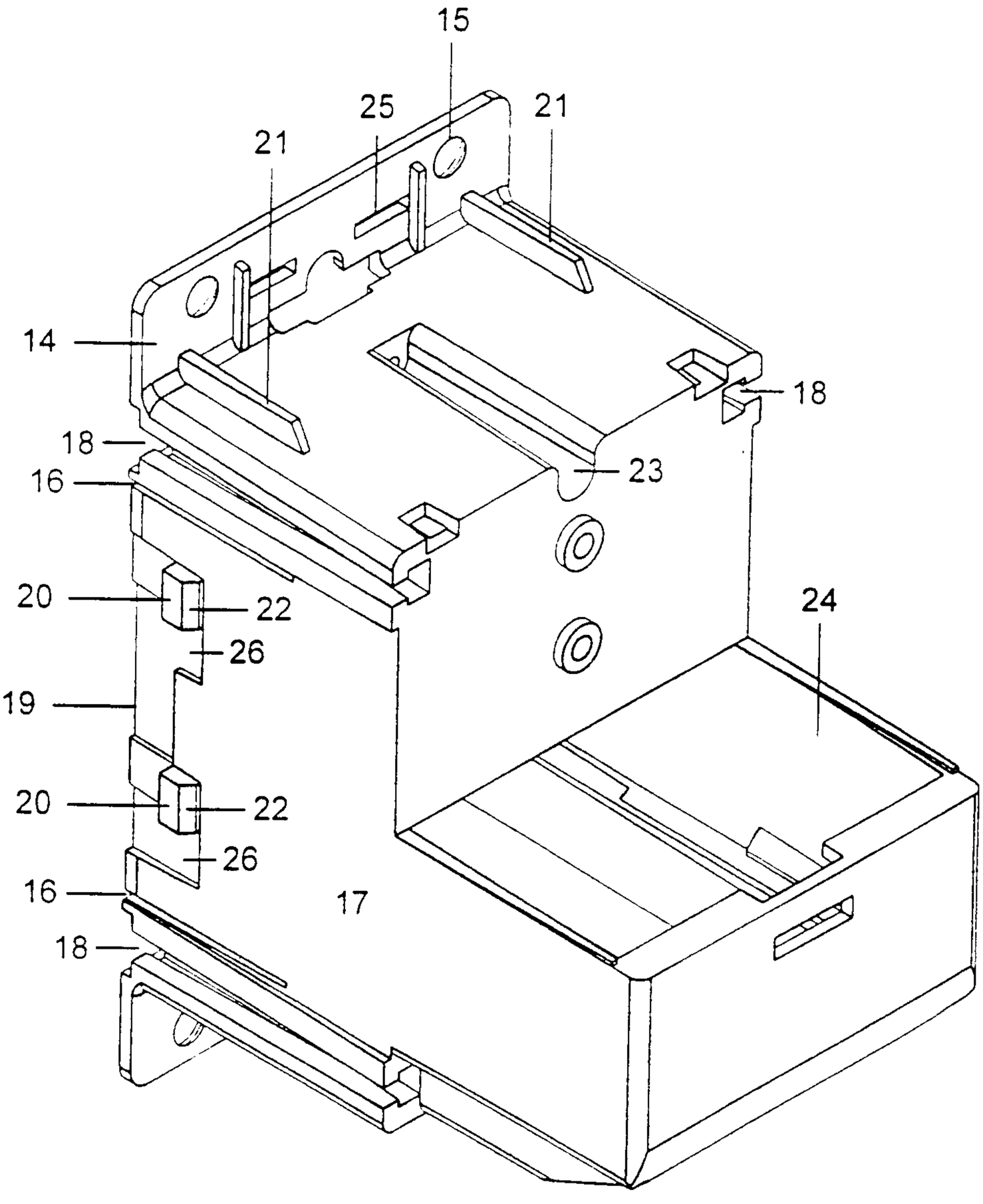

Figure 5

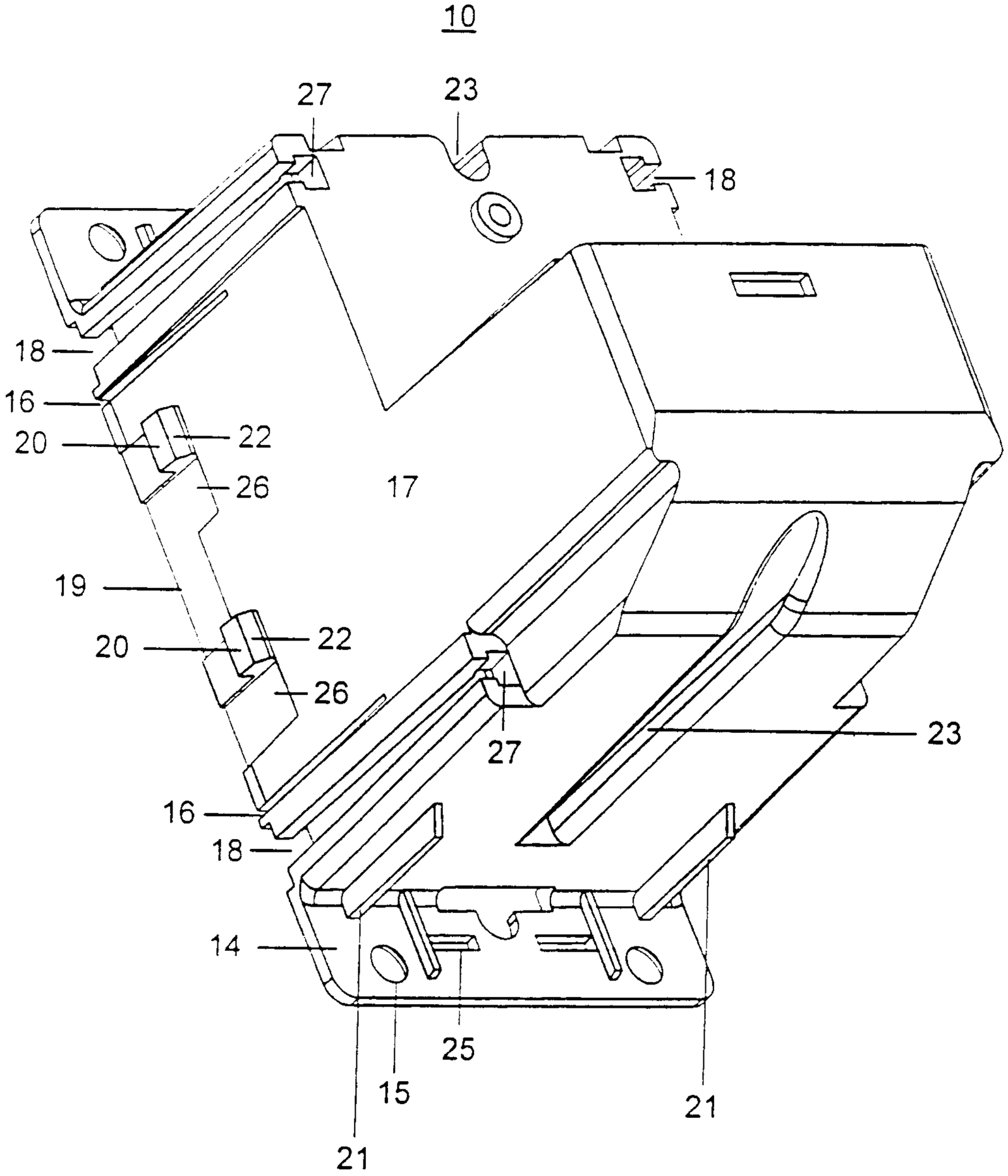

Figure 6

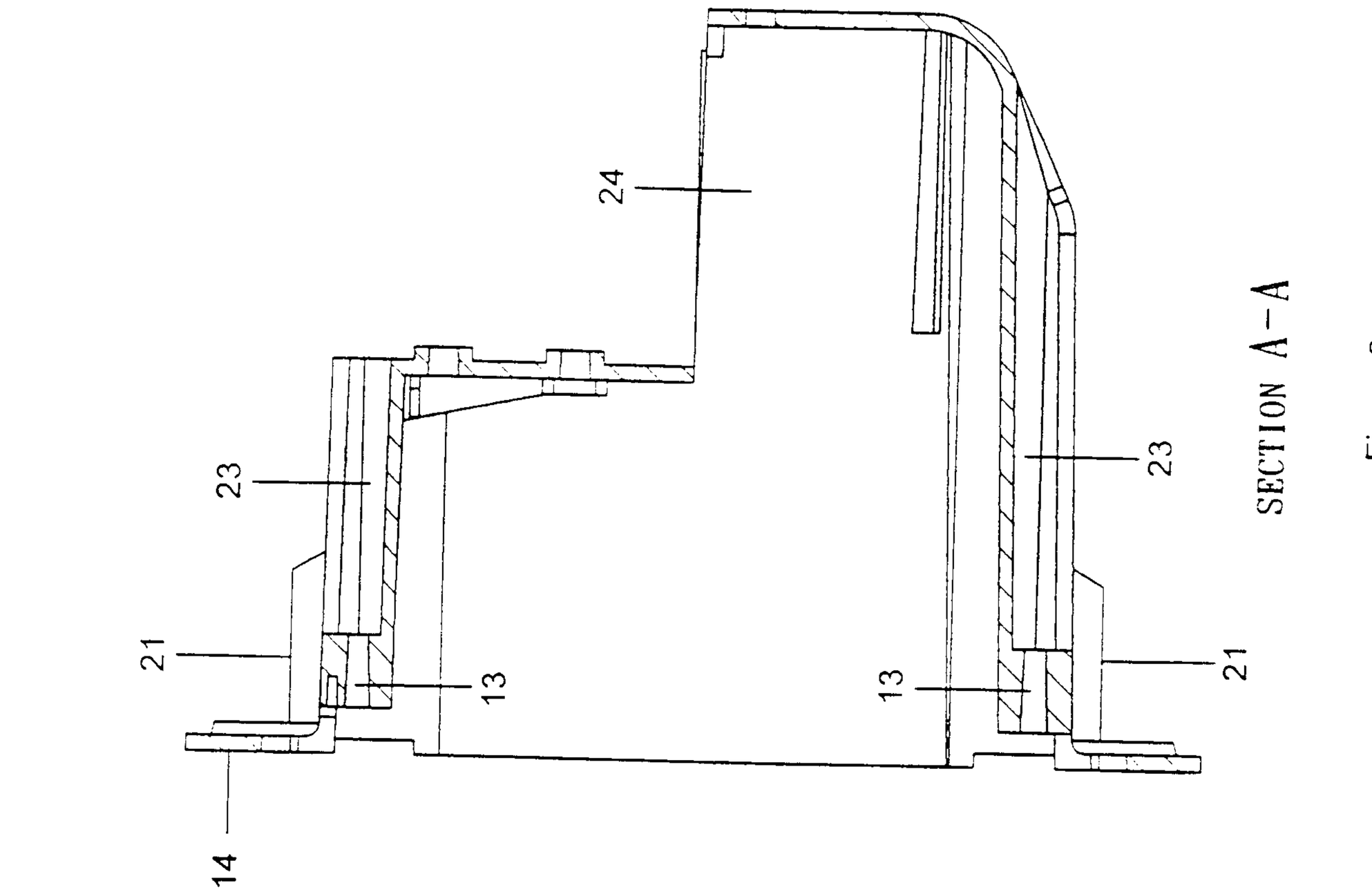

Figure 8

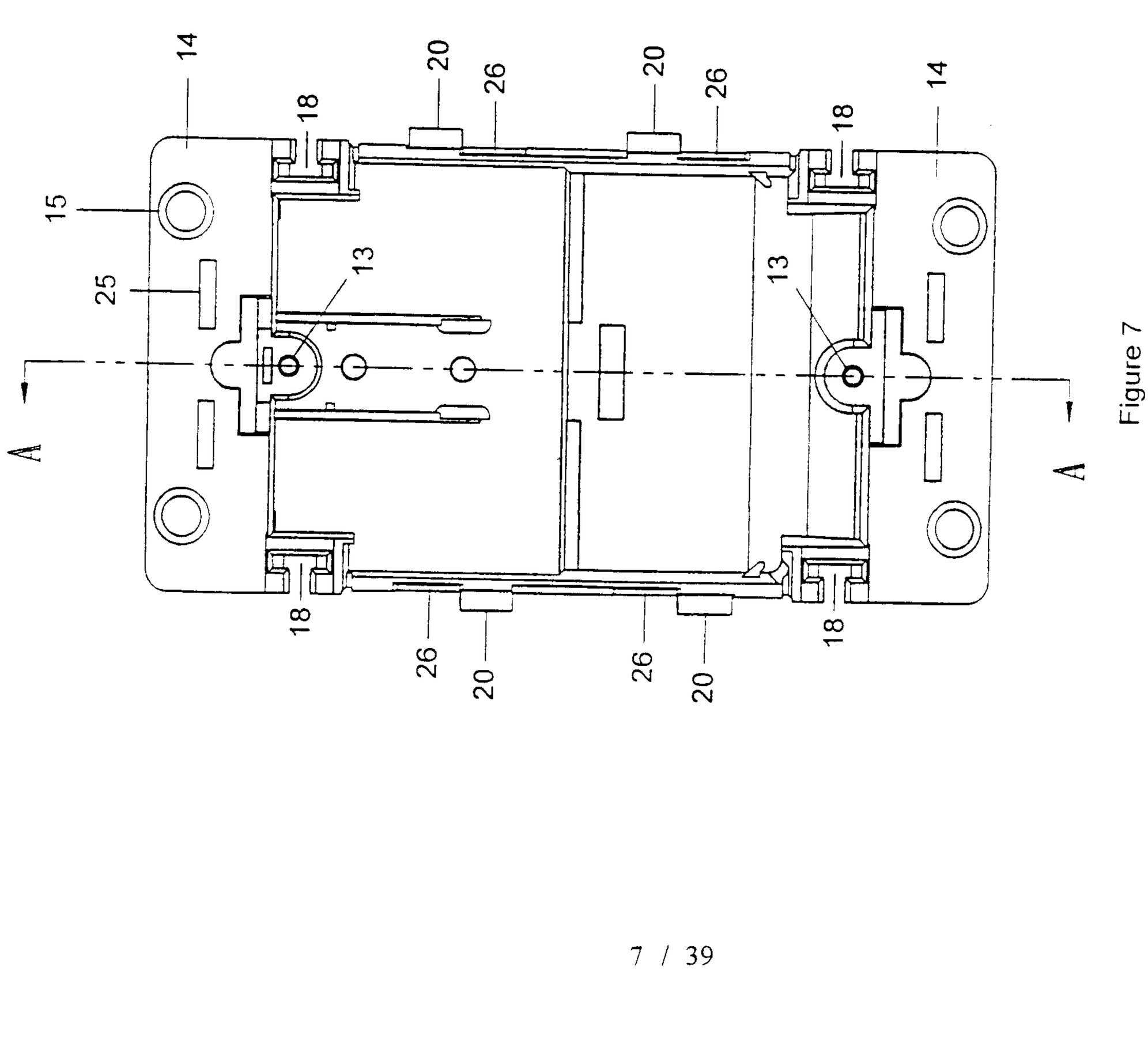

Figure 7

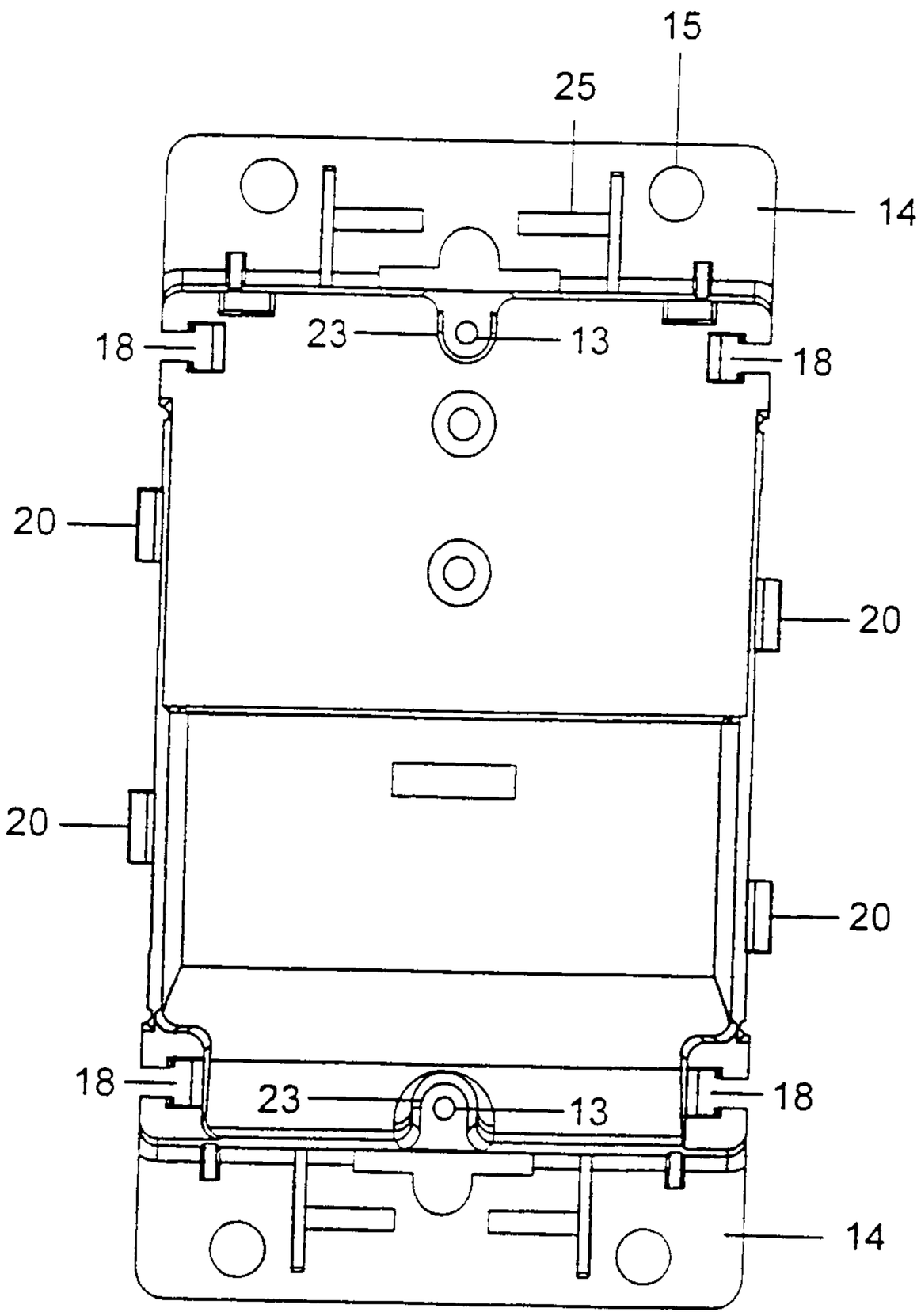

Figure 9

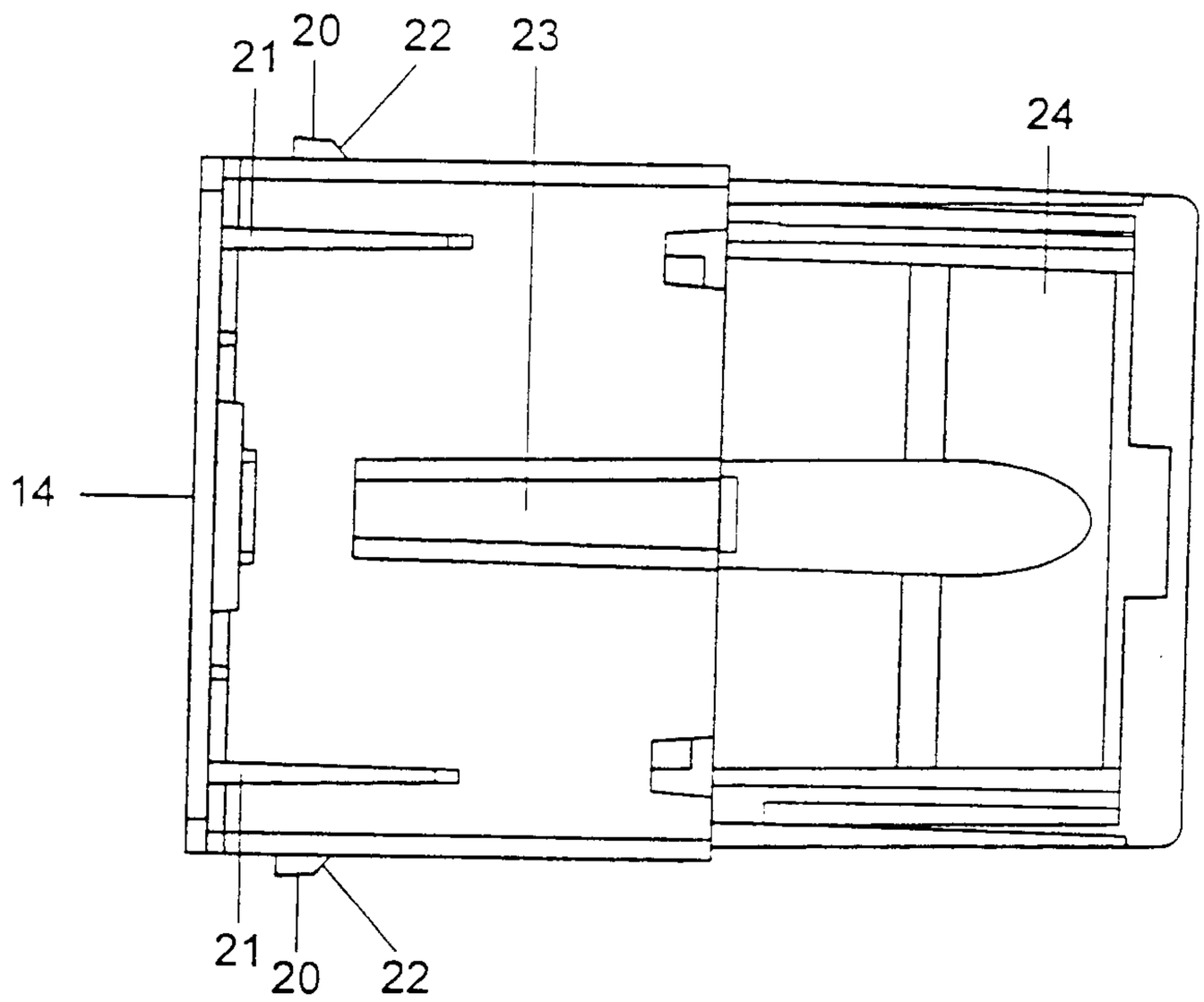

Figure 10

Figure 11

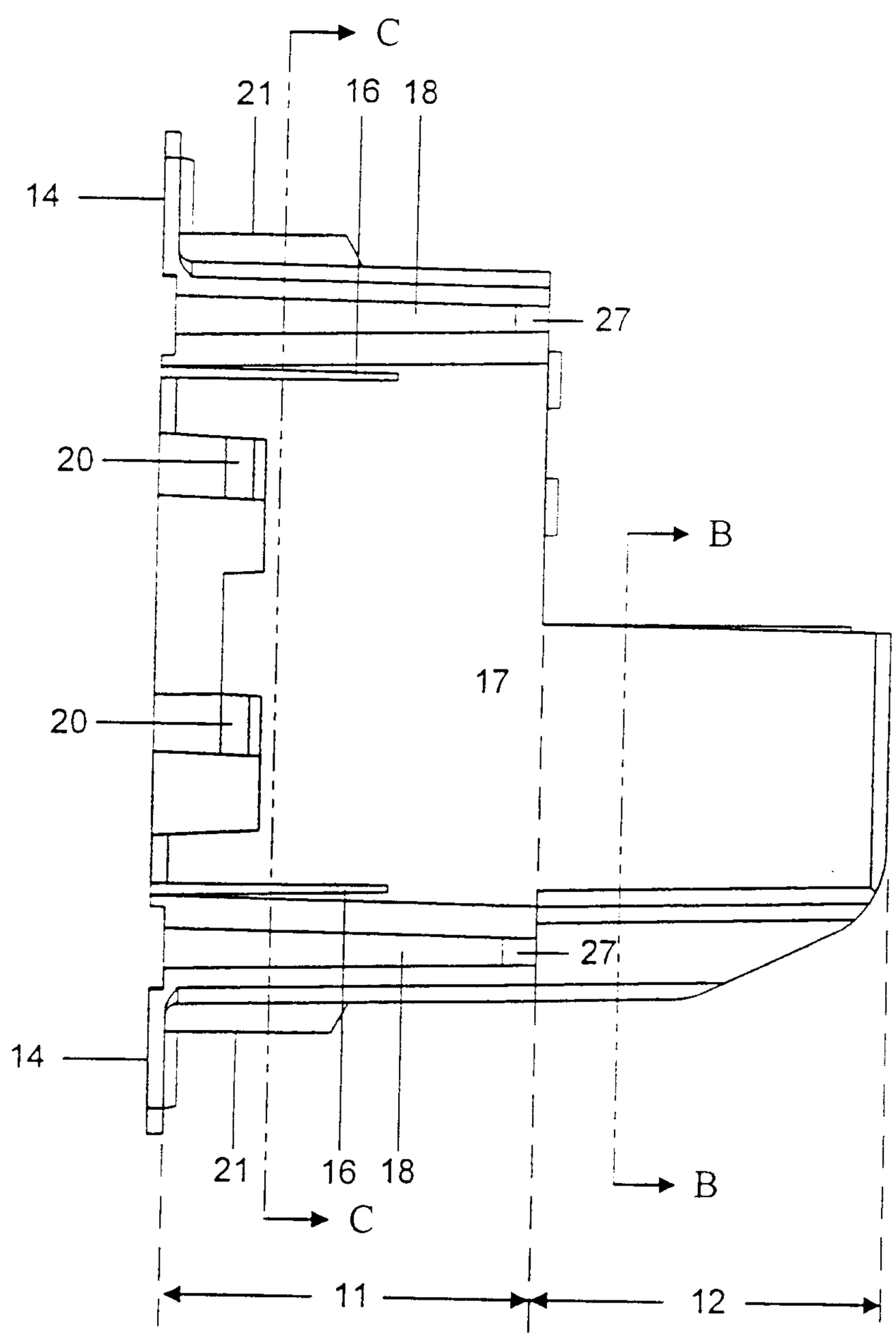

Figure 12

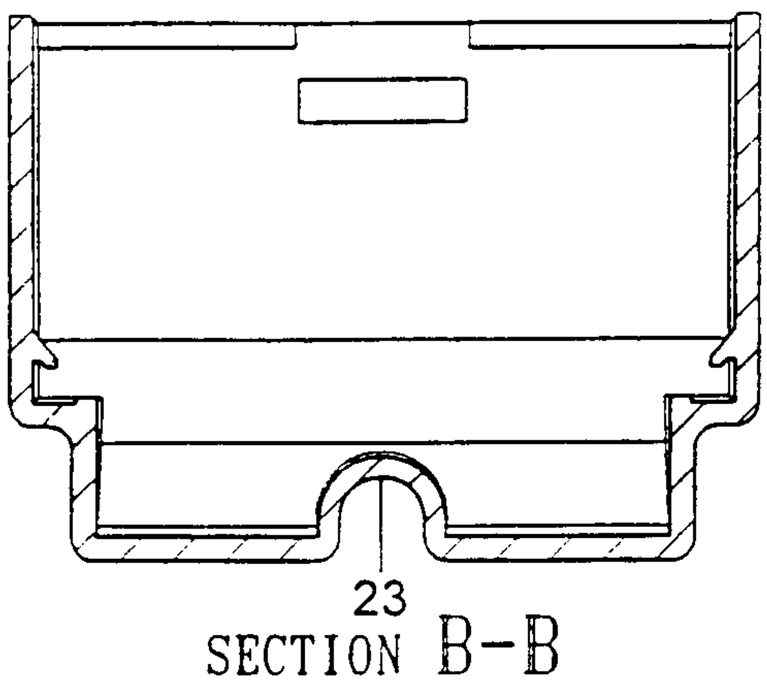

Figure 13

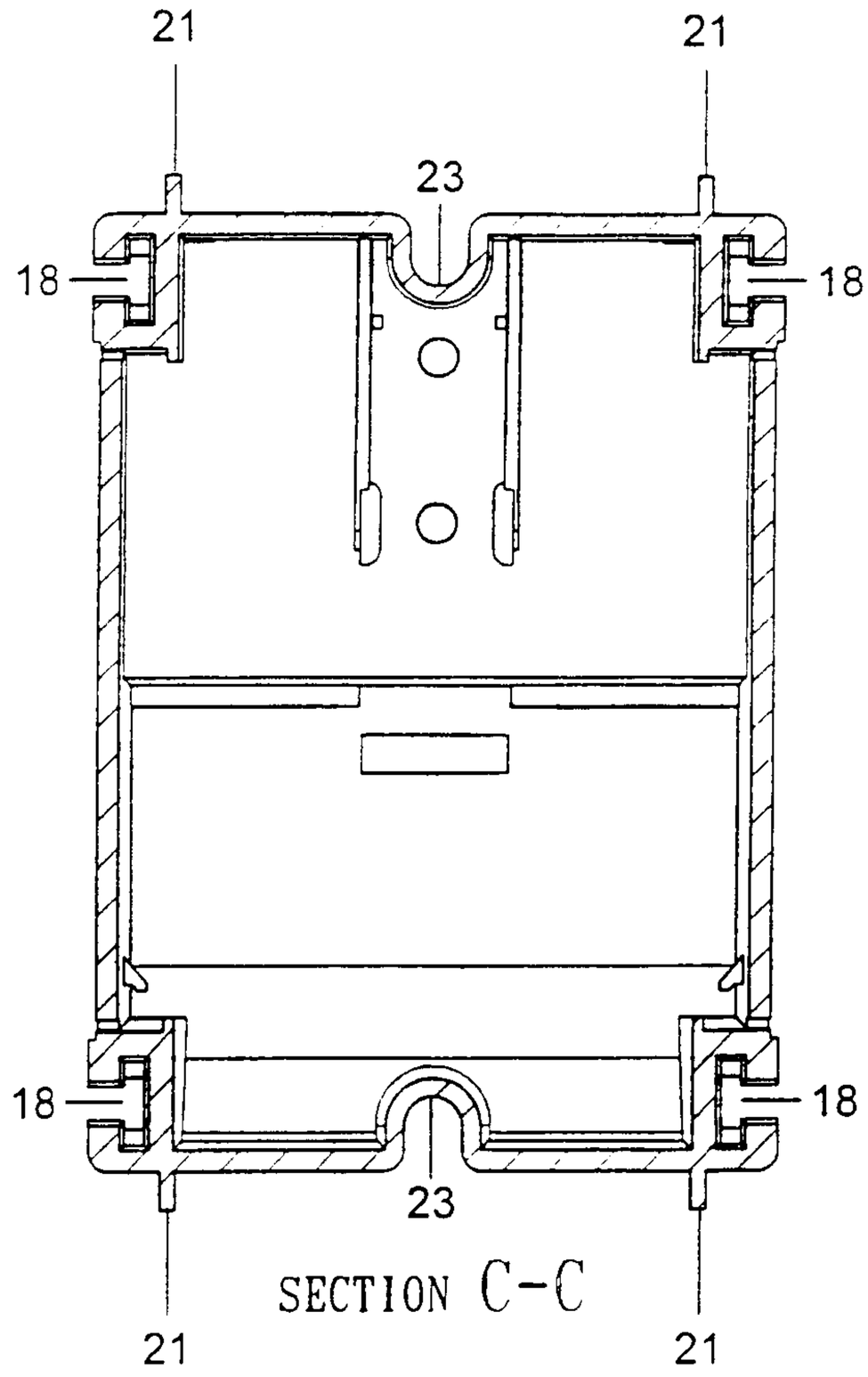

Figure 14

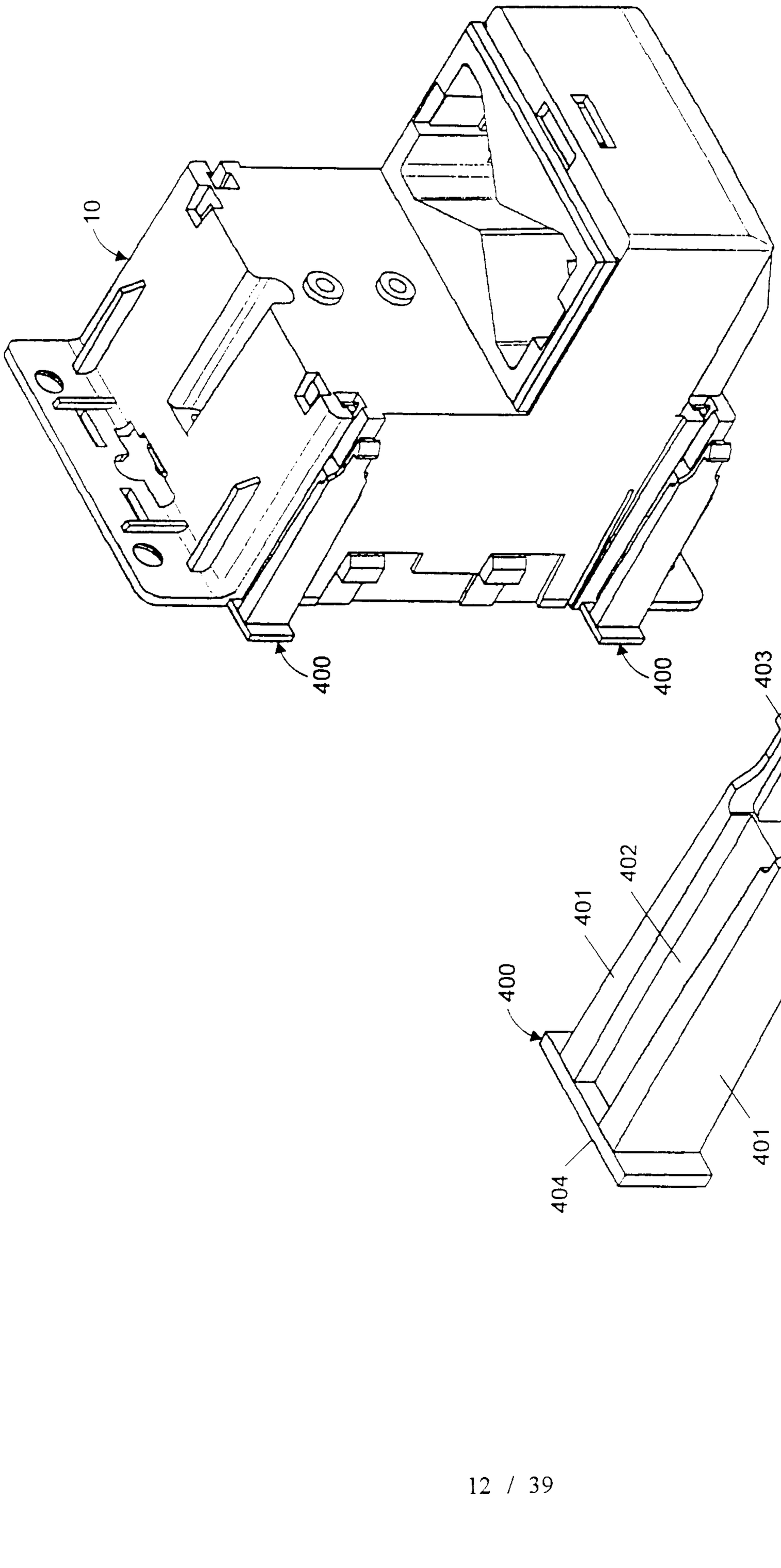

Figure 16

Figure 15

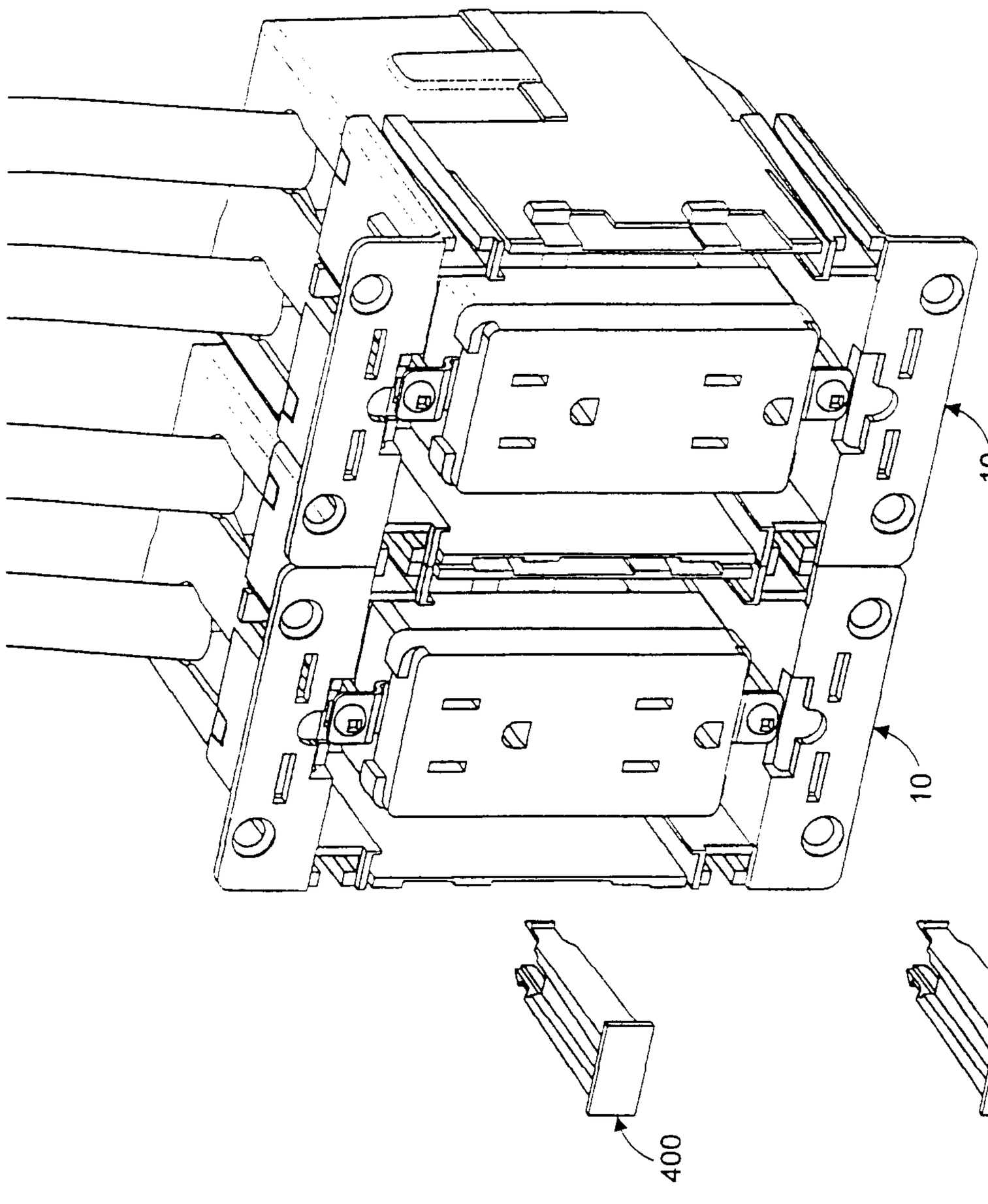

Figure 17

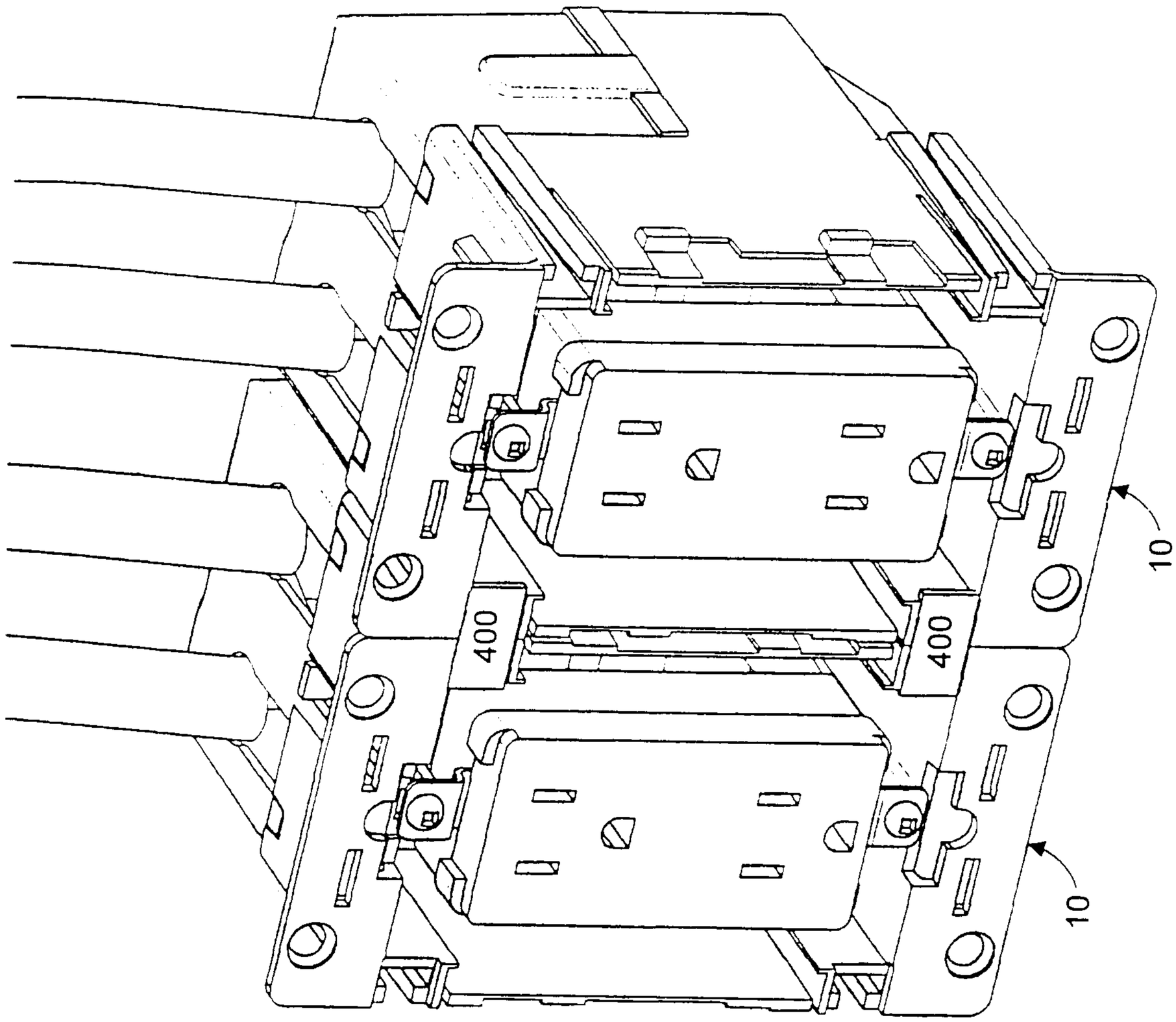

Figure 18

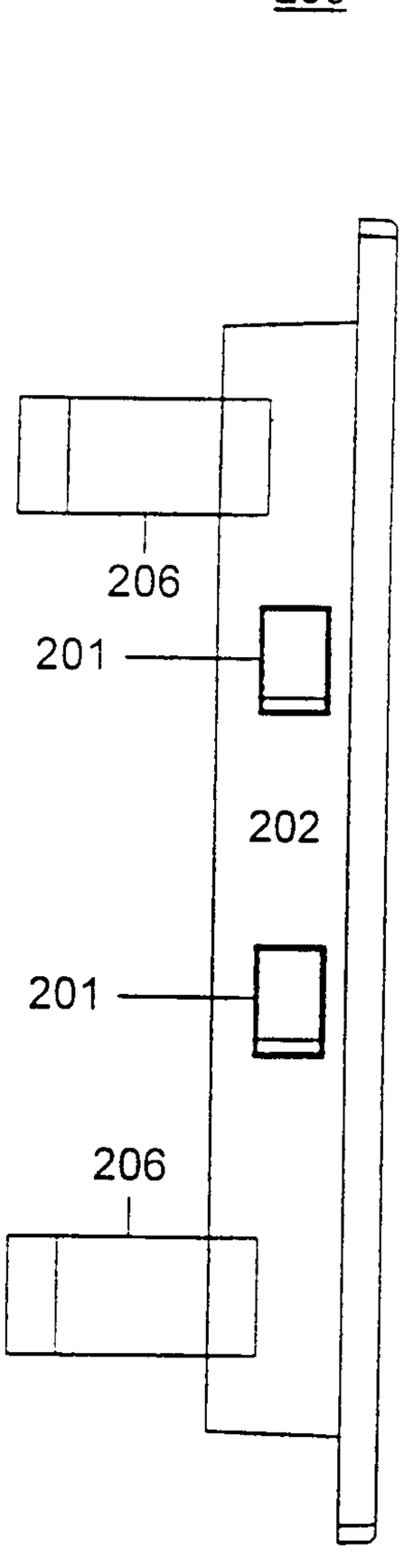

Figure 19

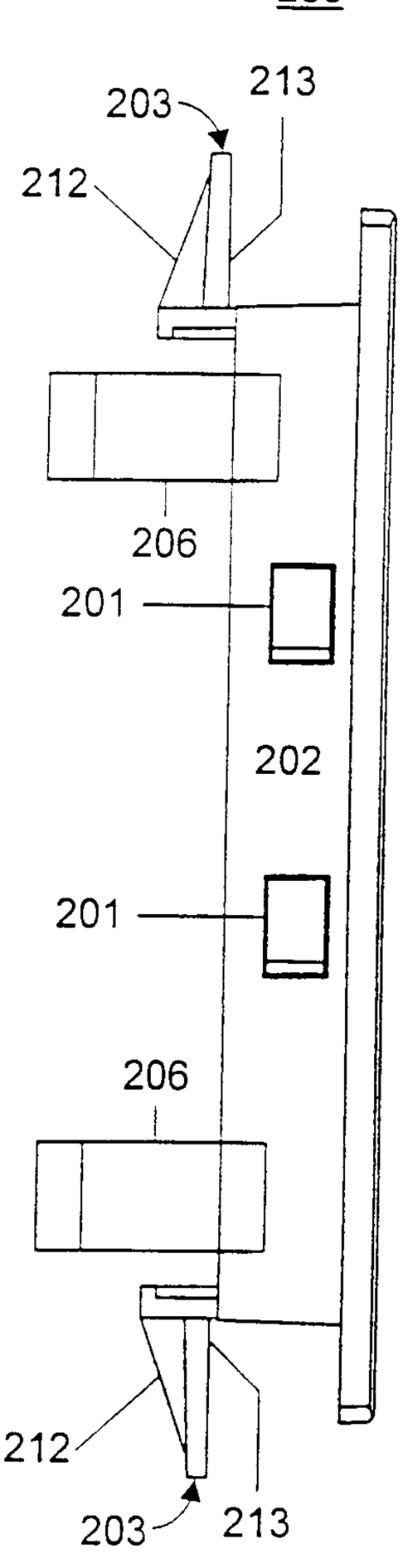

Figure 20

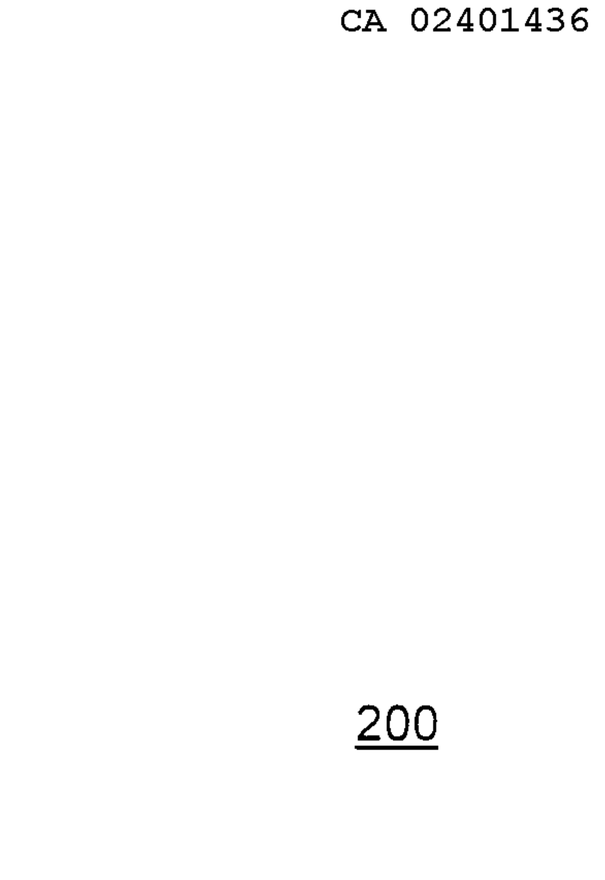

Figure 21

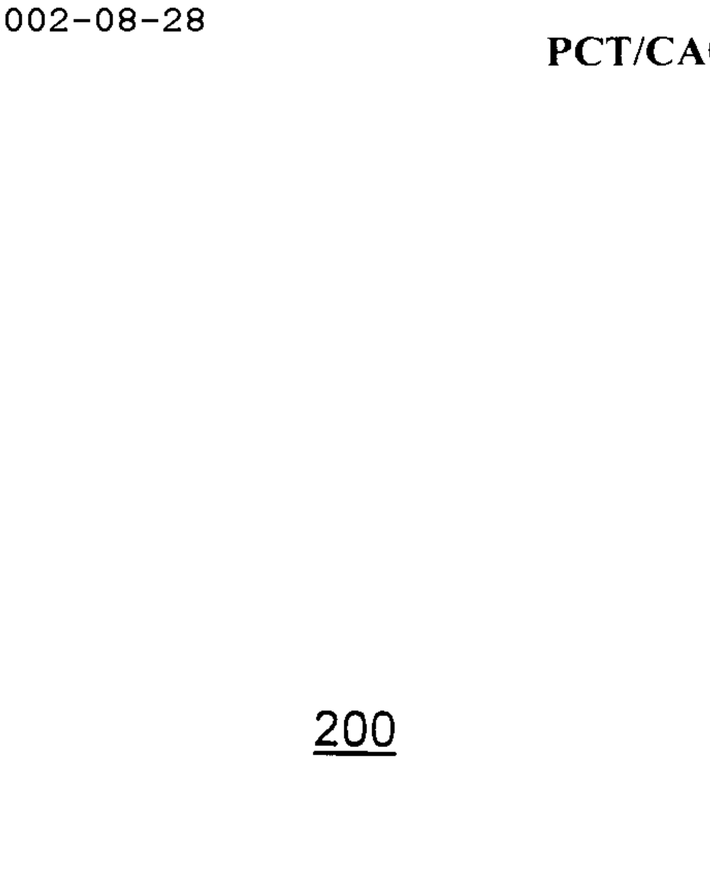

Figure 23

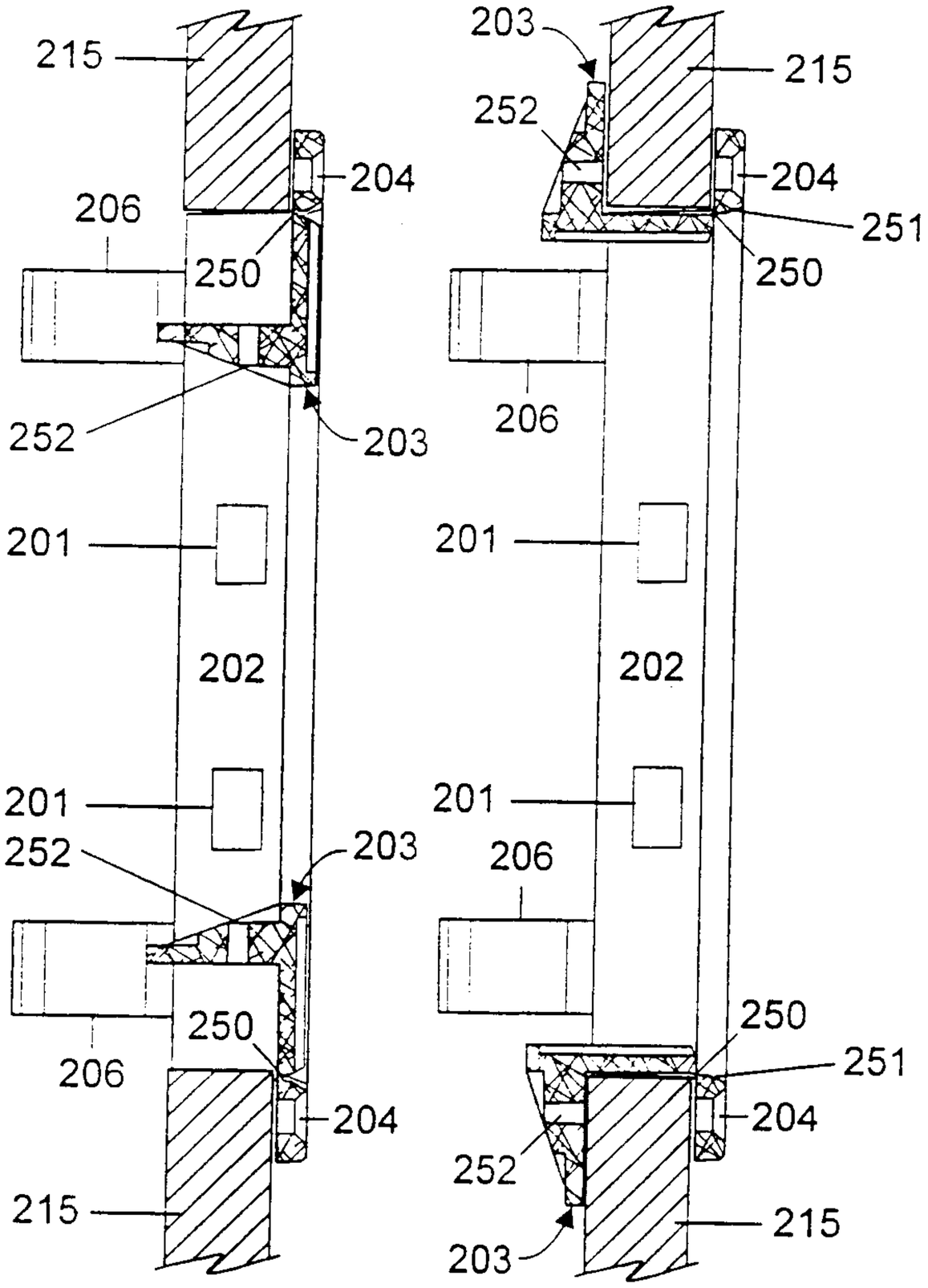

SECTION D - D

Figure 22

Figure 24

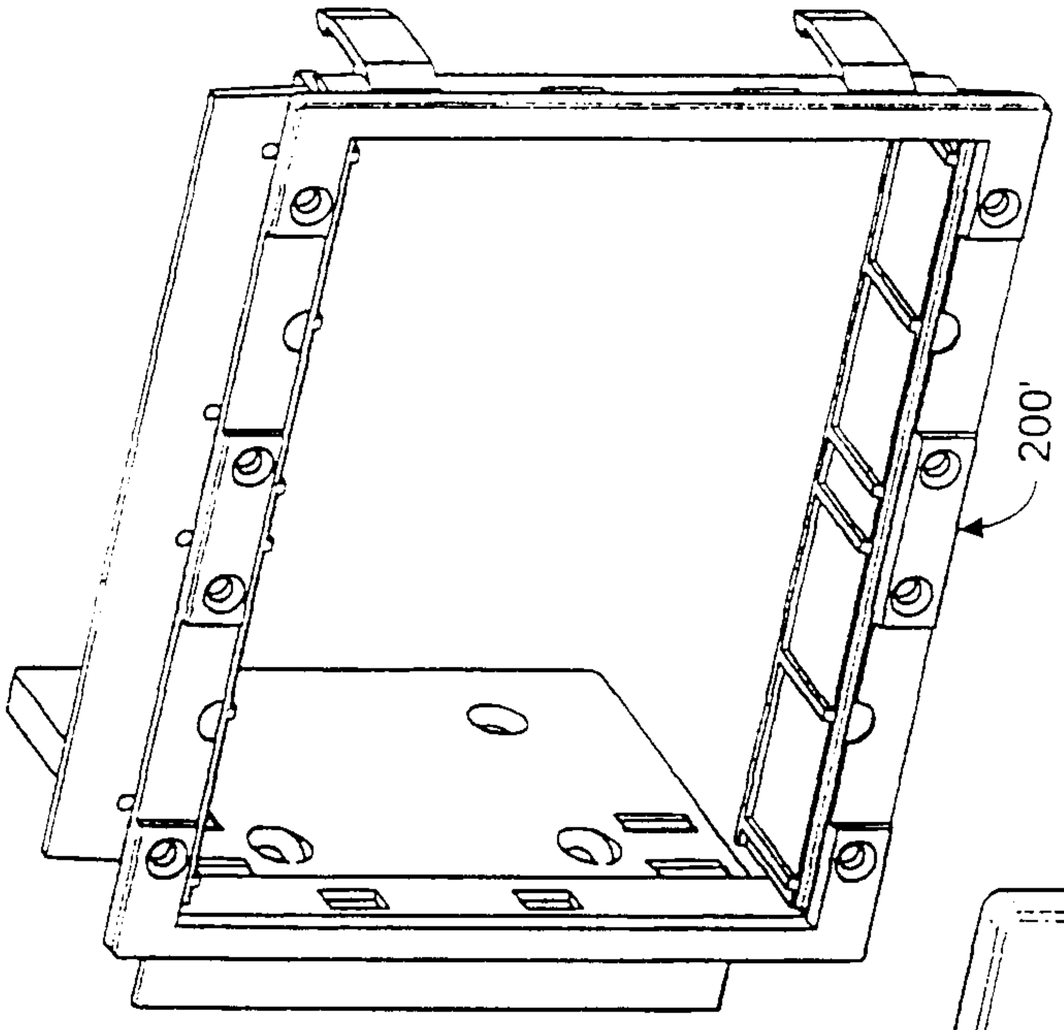

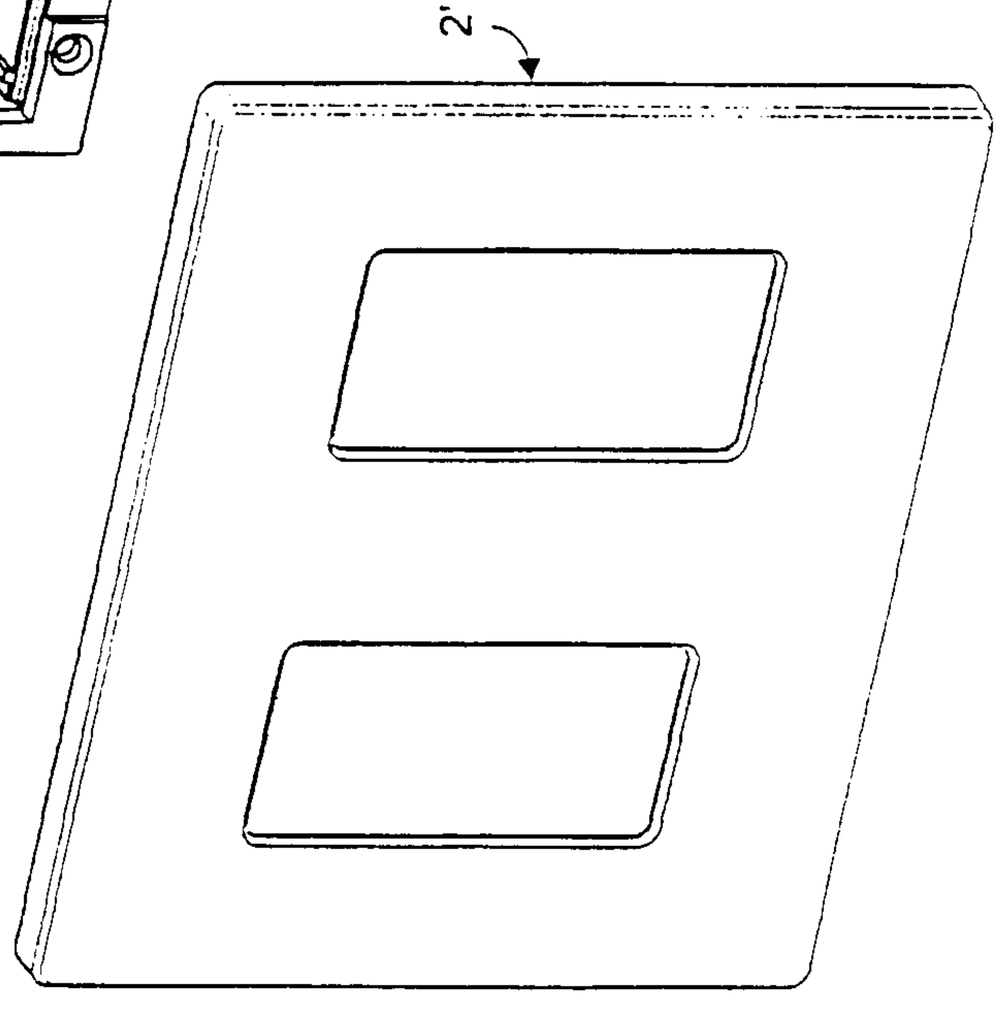

Figure 25

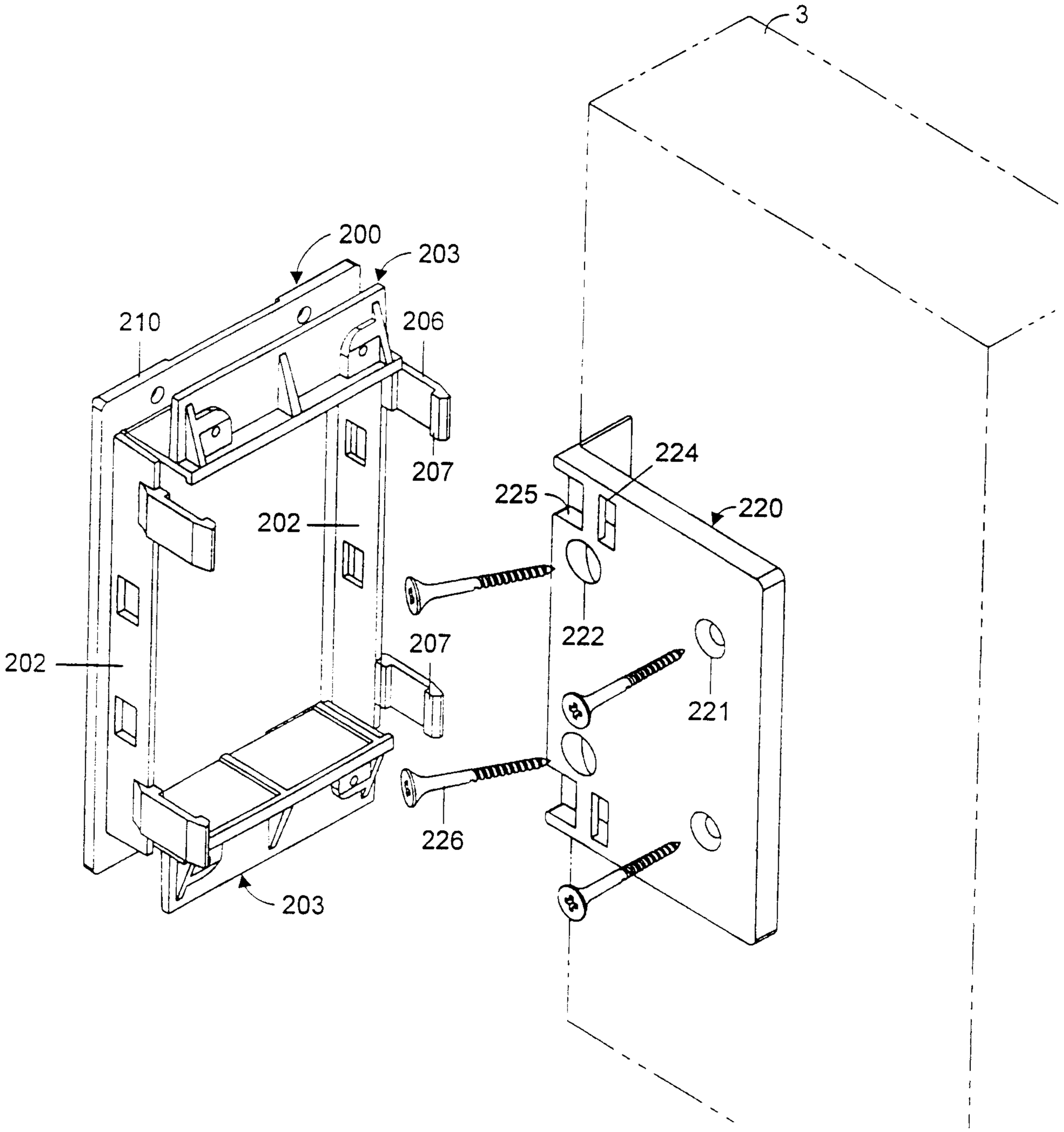

Figure 26

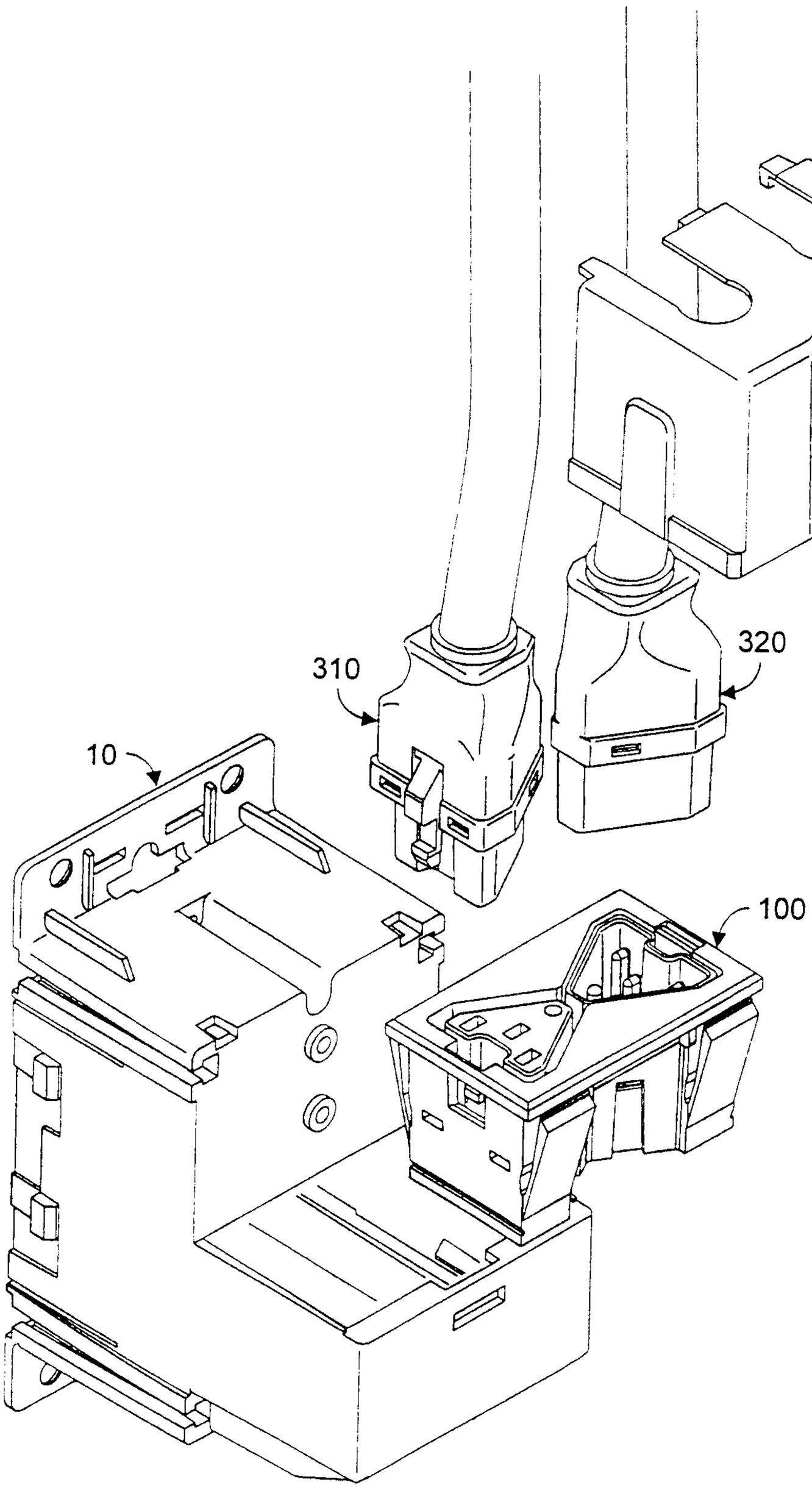

Figure 27

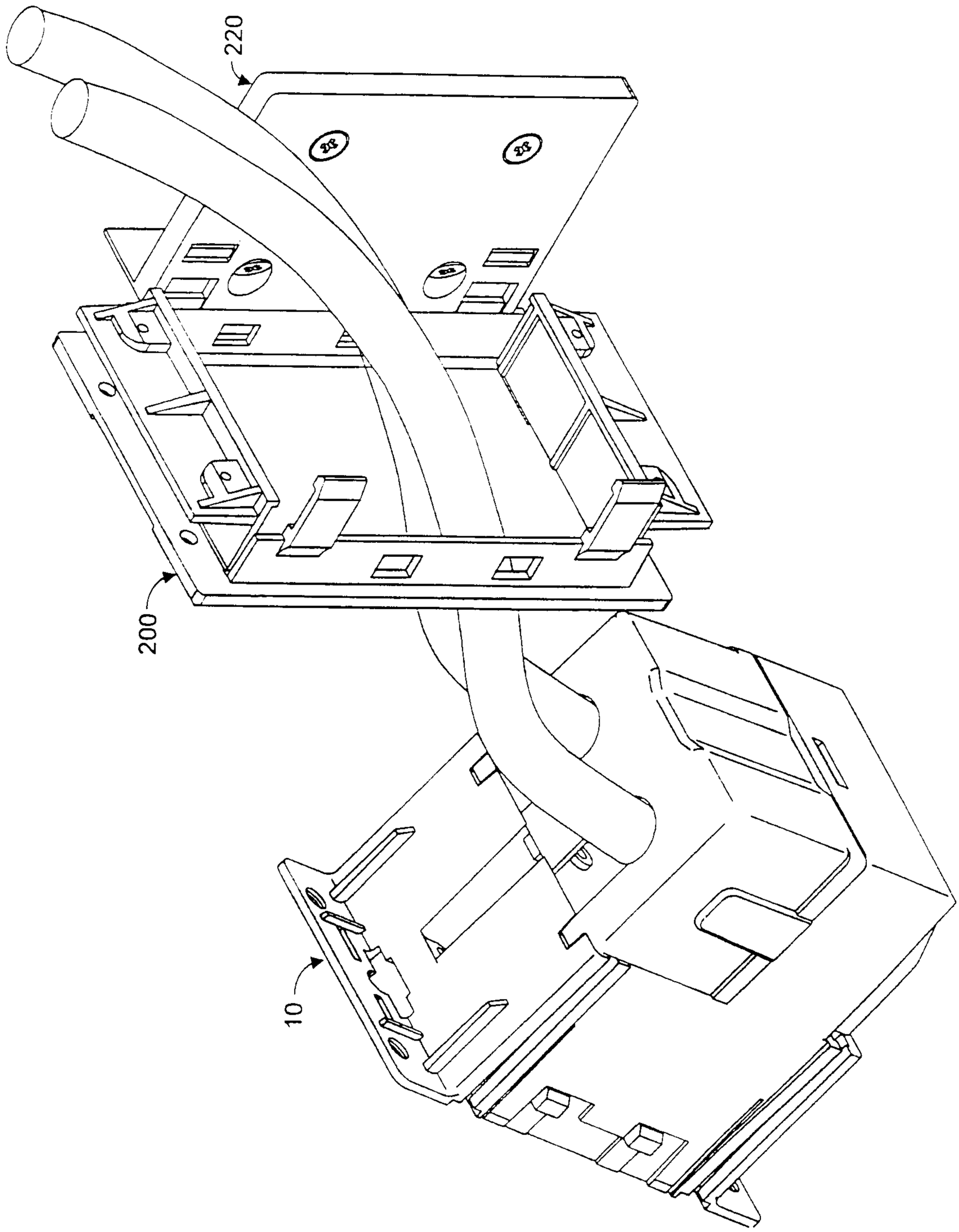

Figure 28

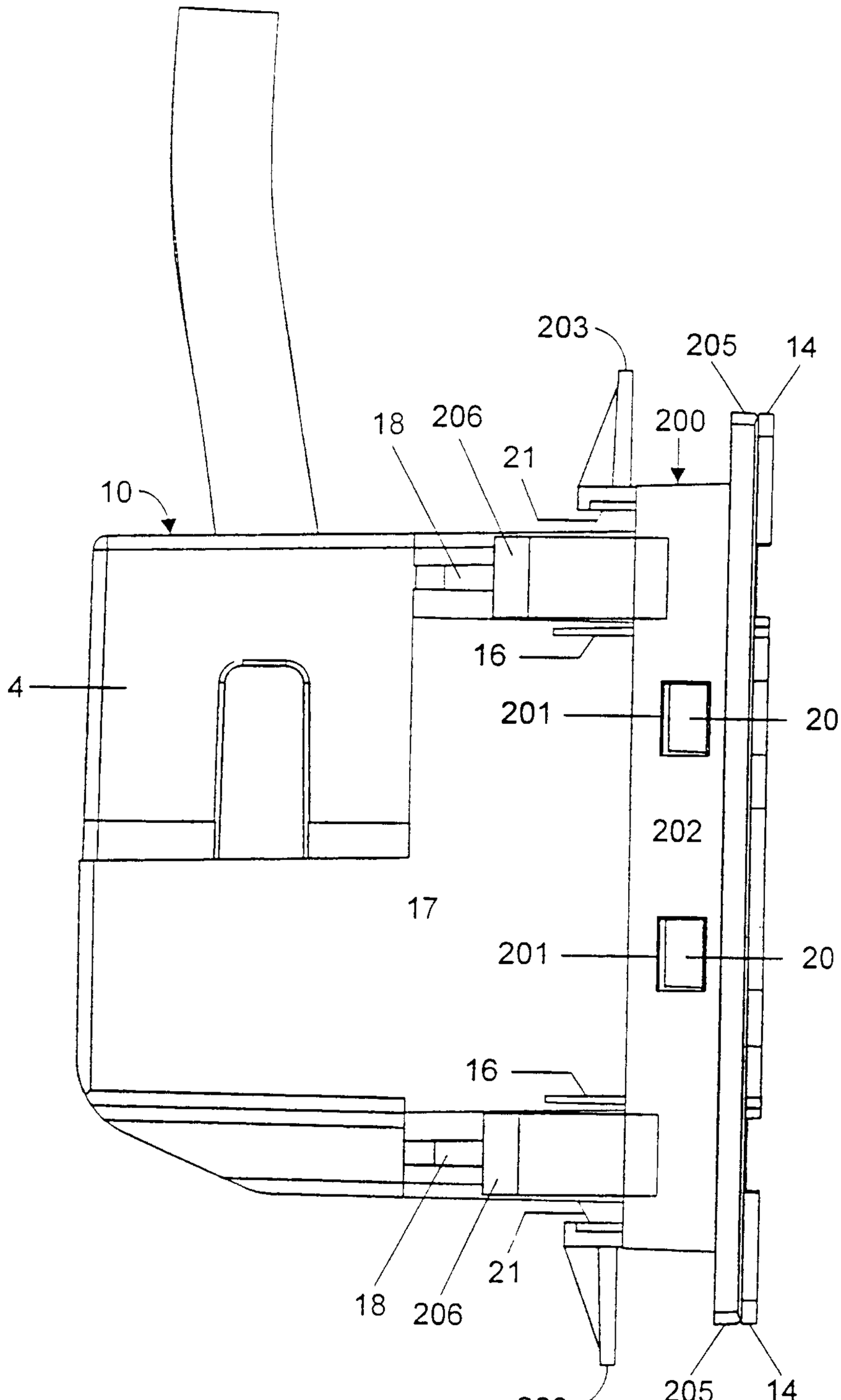
203
205
14
18
206
200
21
10
16
4
201
20
202
17
201
20
16
18
206
21
203
205
14

Figure 29

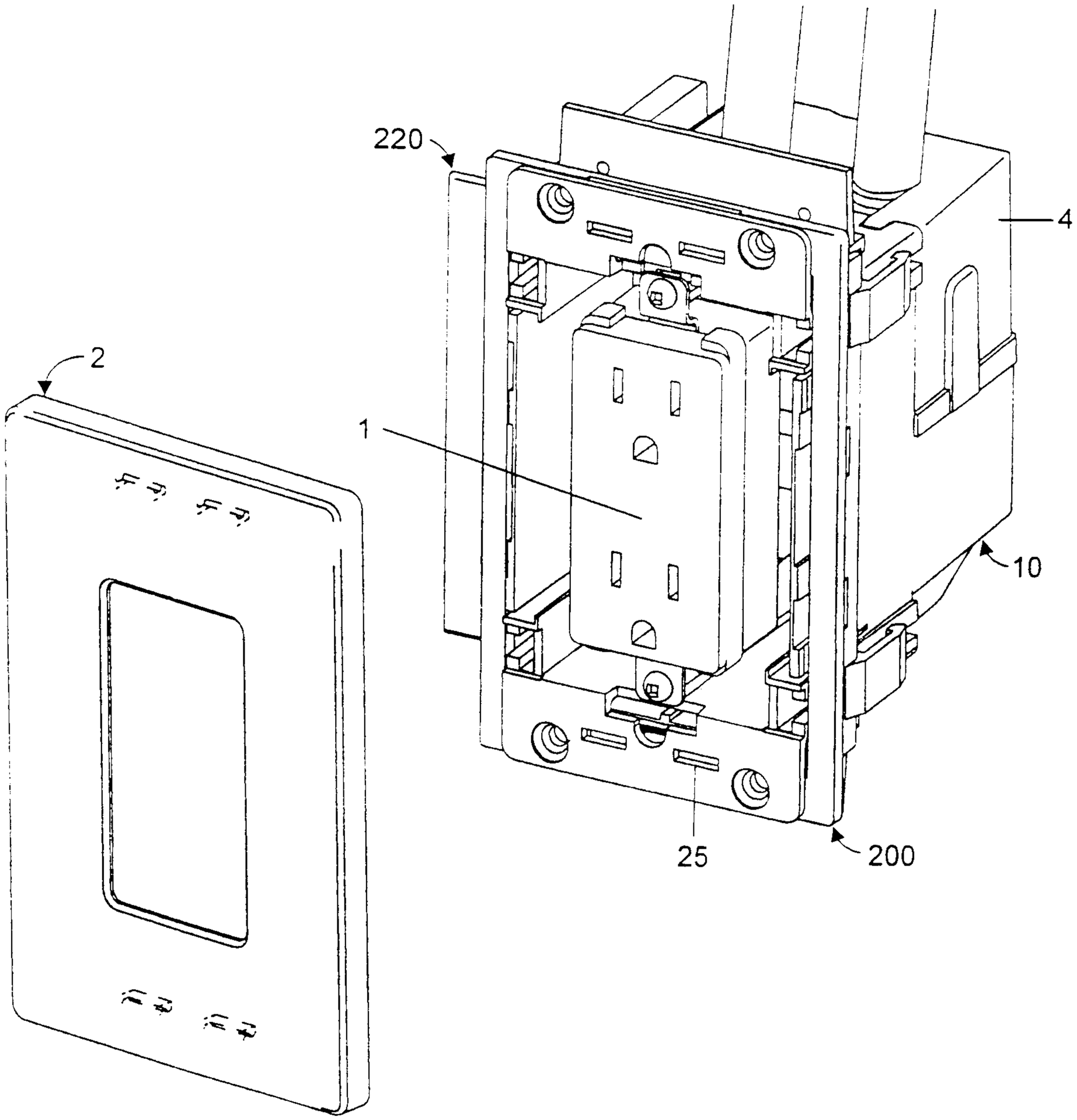

Figure 30

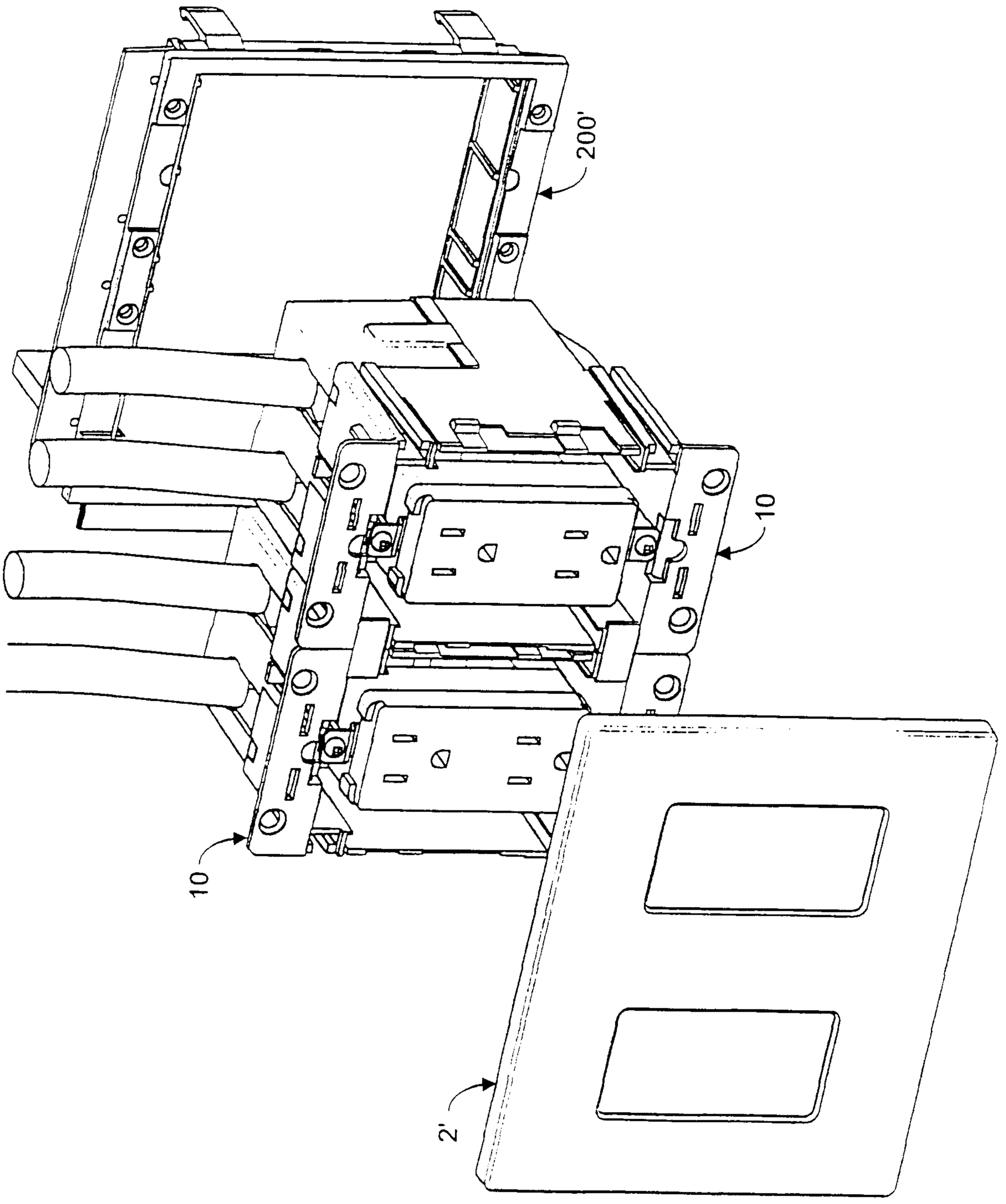

Figure 31

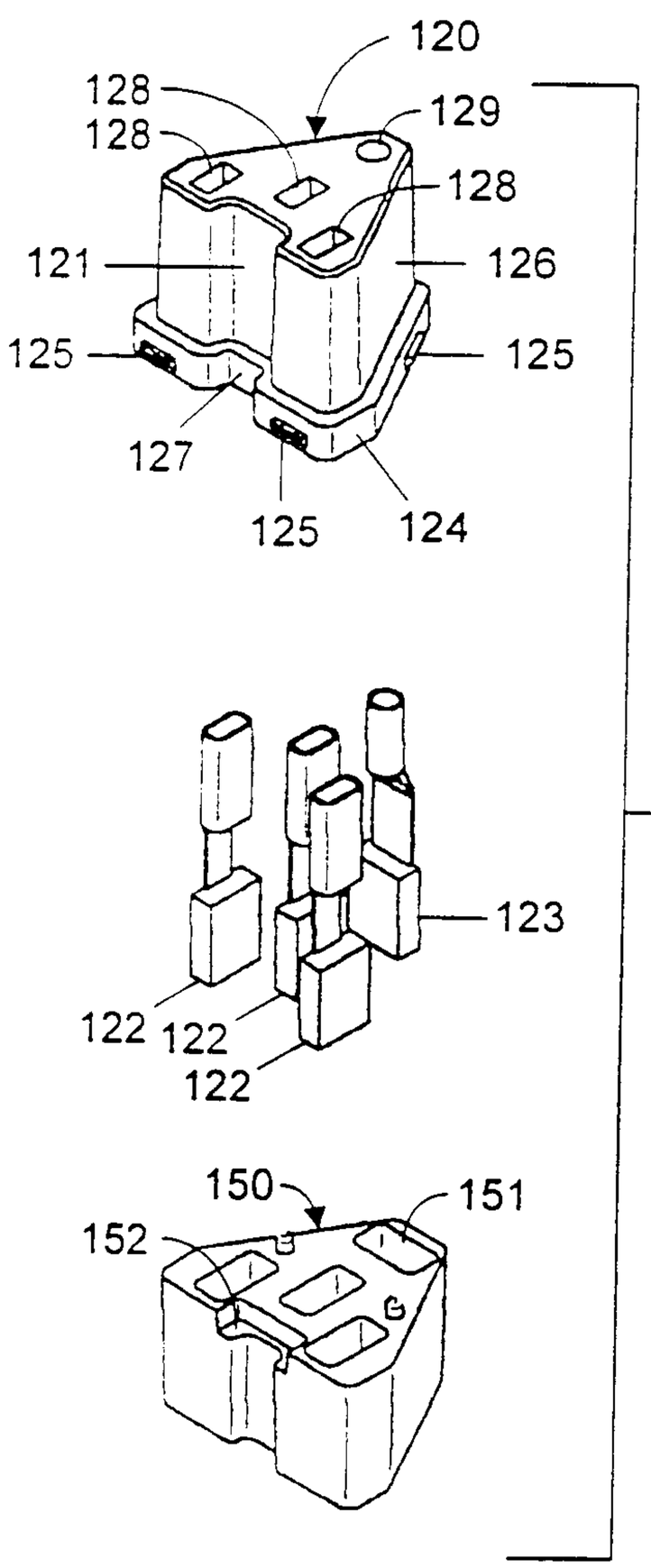

Figure 32

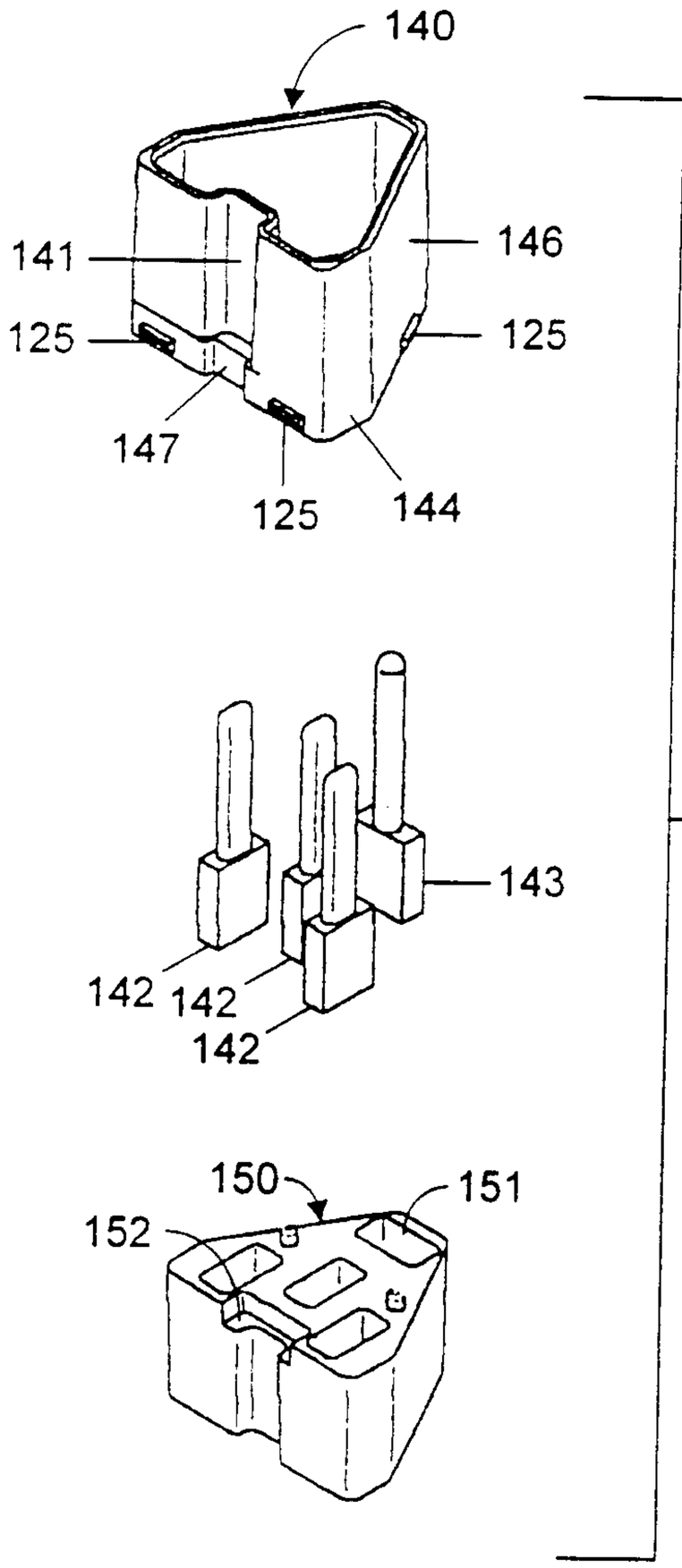

Figure 33

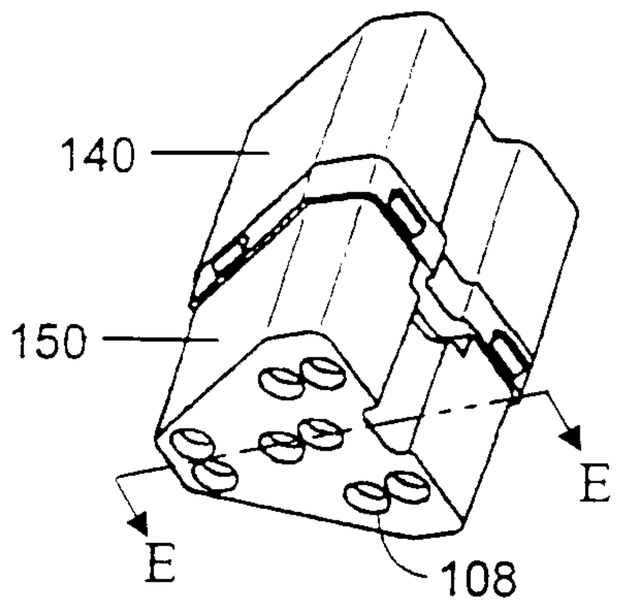

Figure 34

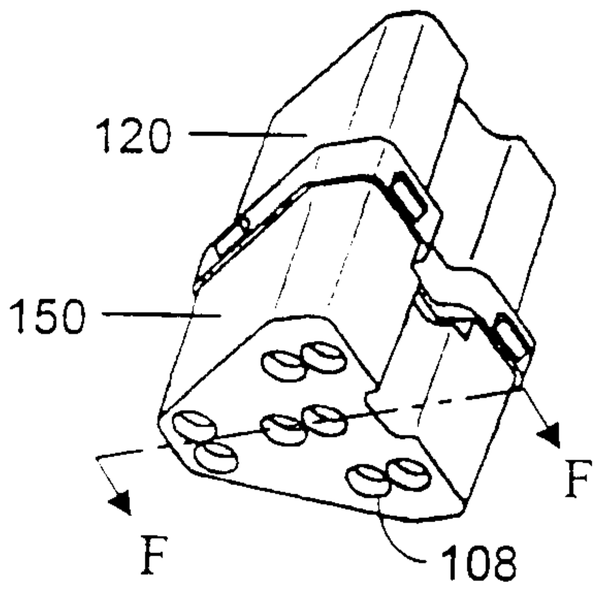

Figure 35

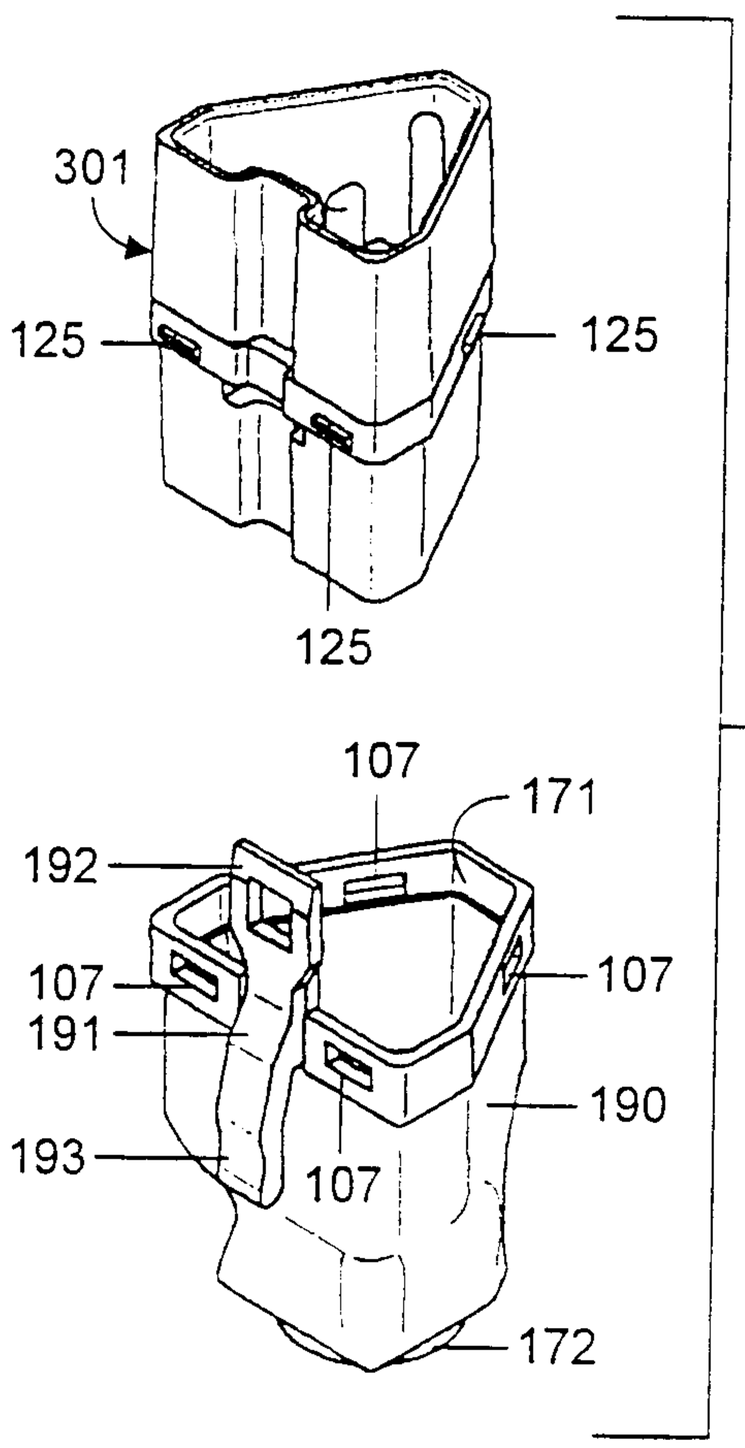

Figure 36

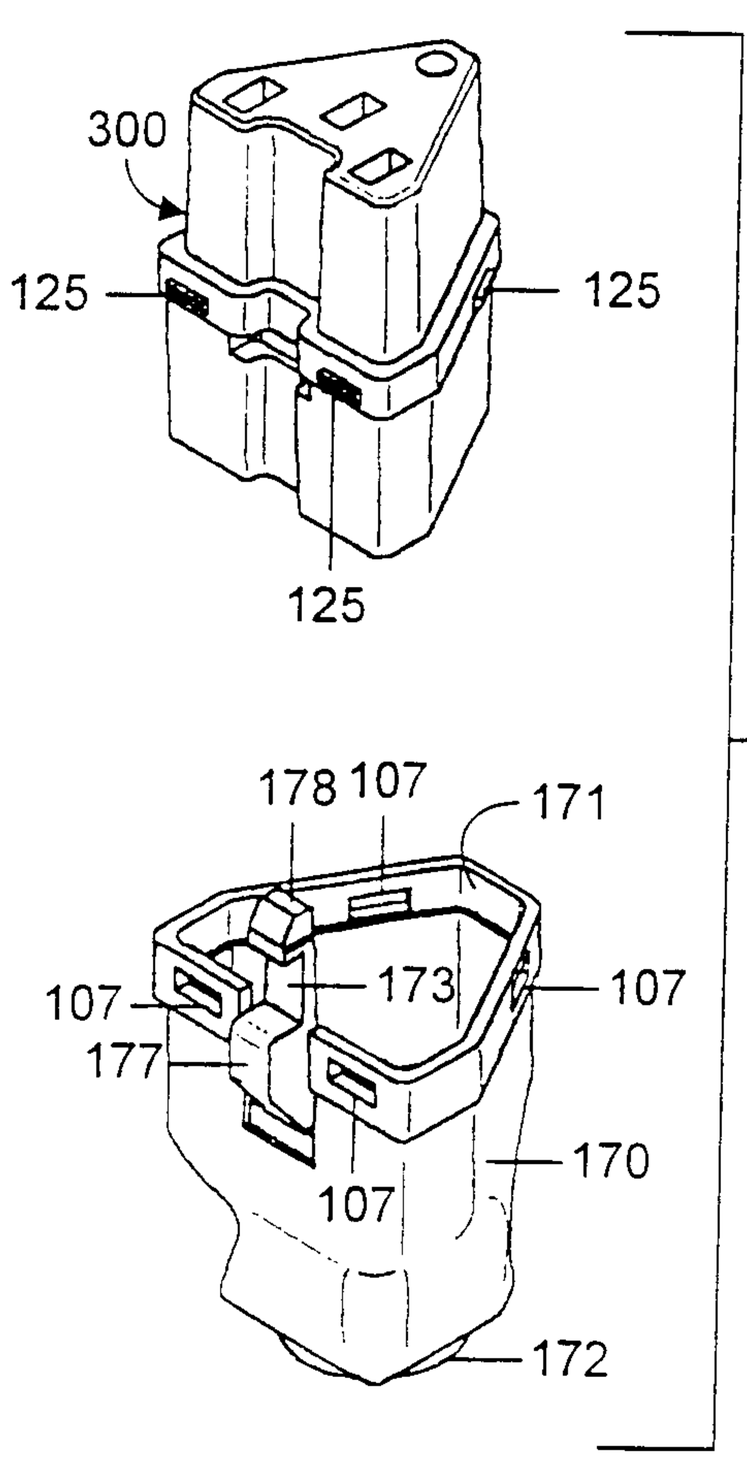

Figure 37

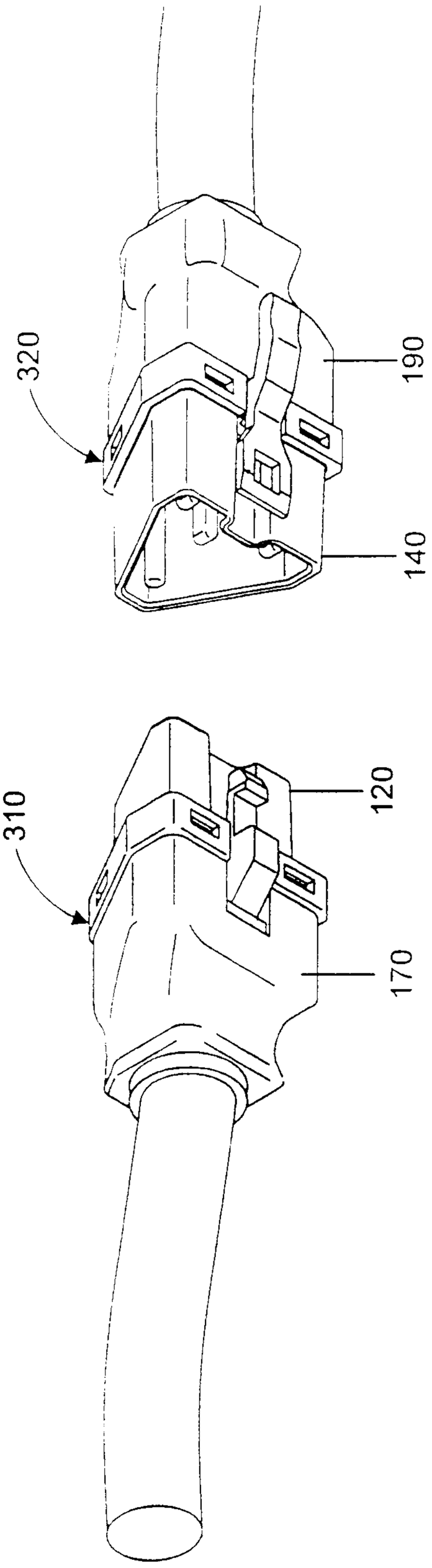

Figure 38

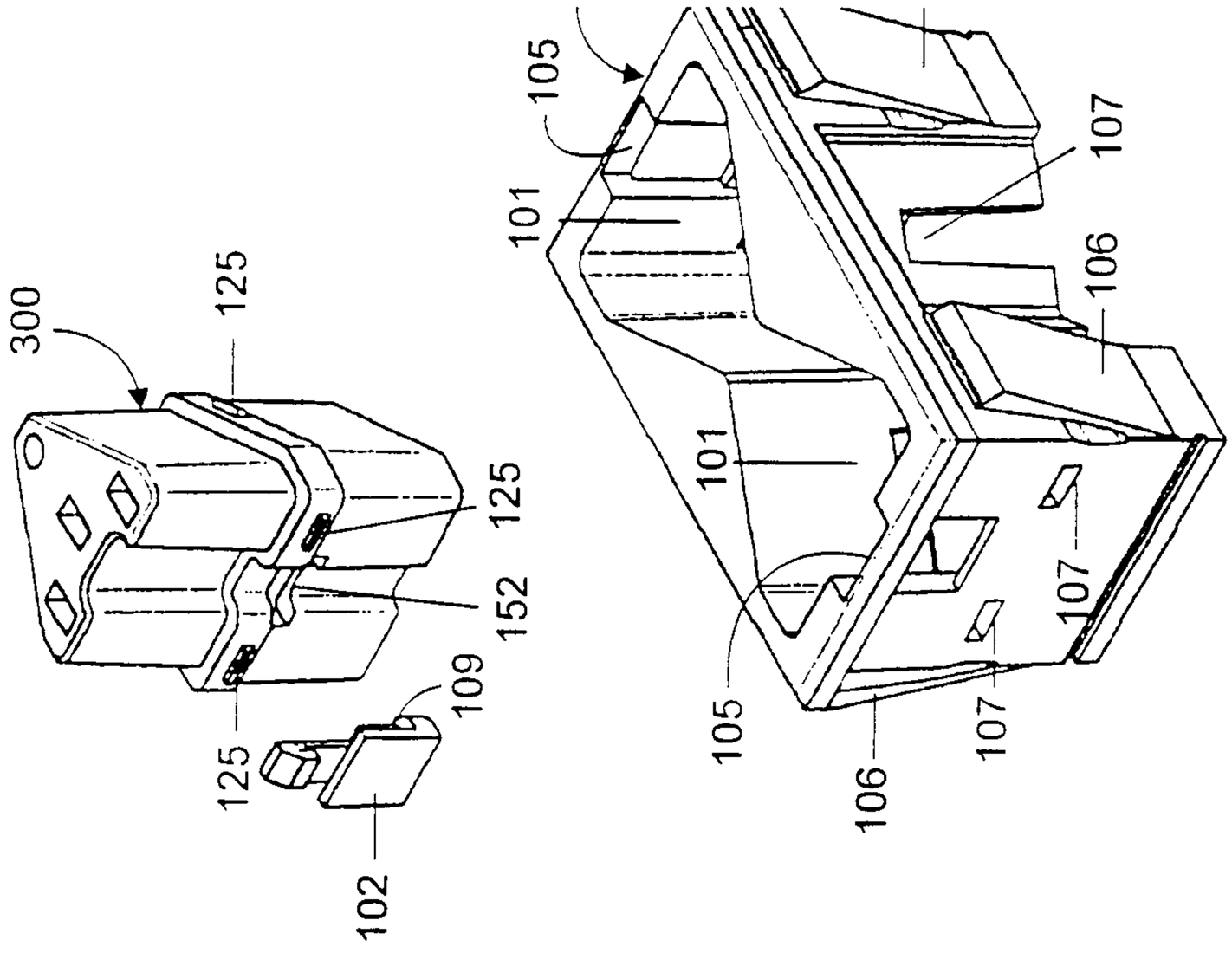

Figure 40

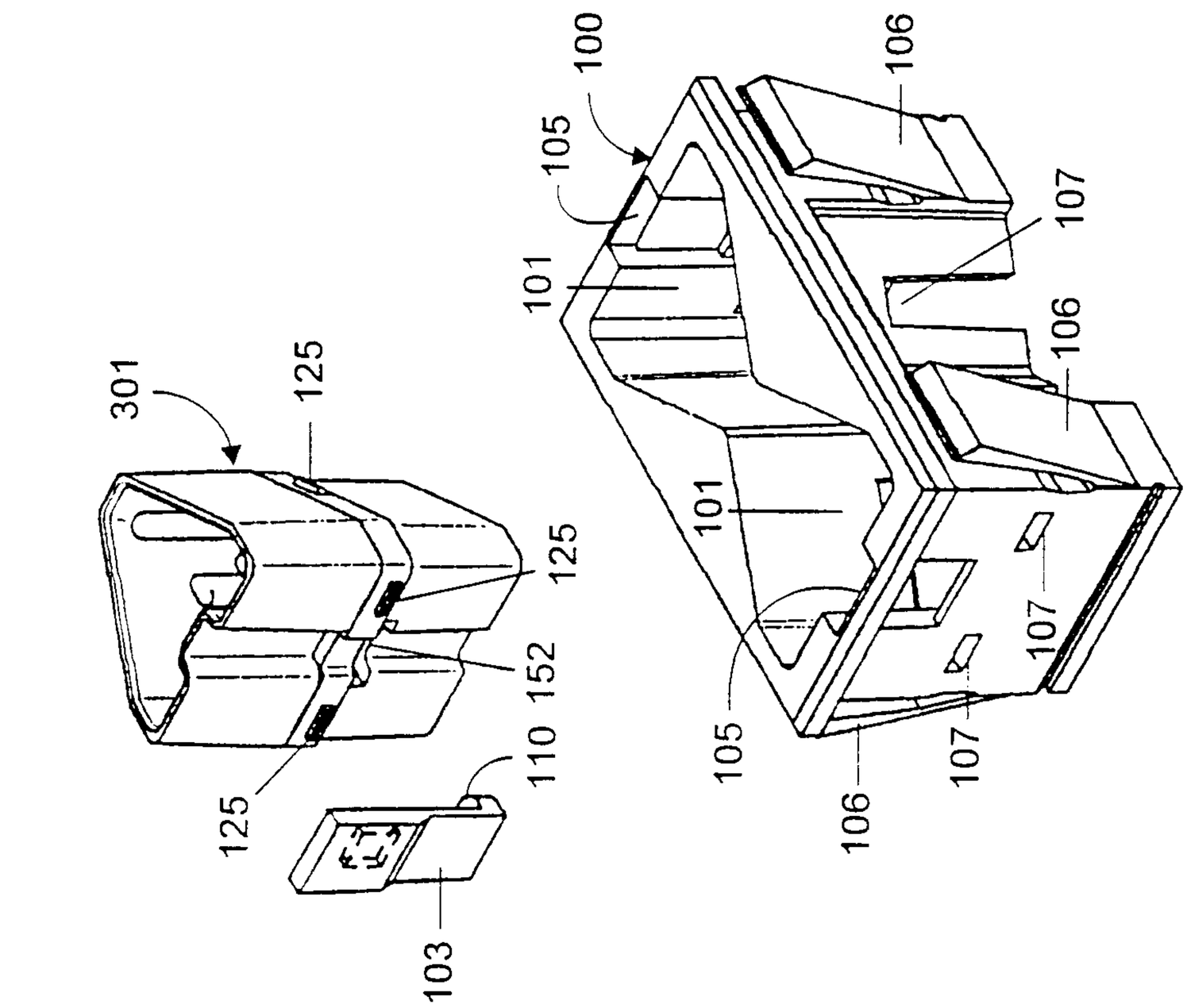

Figure 39

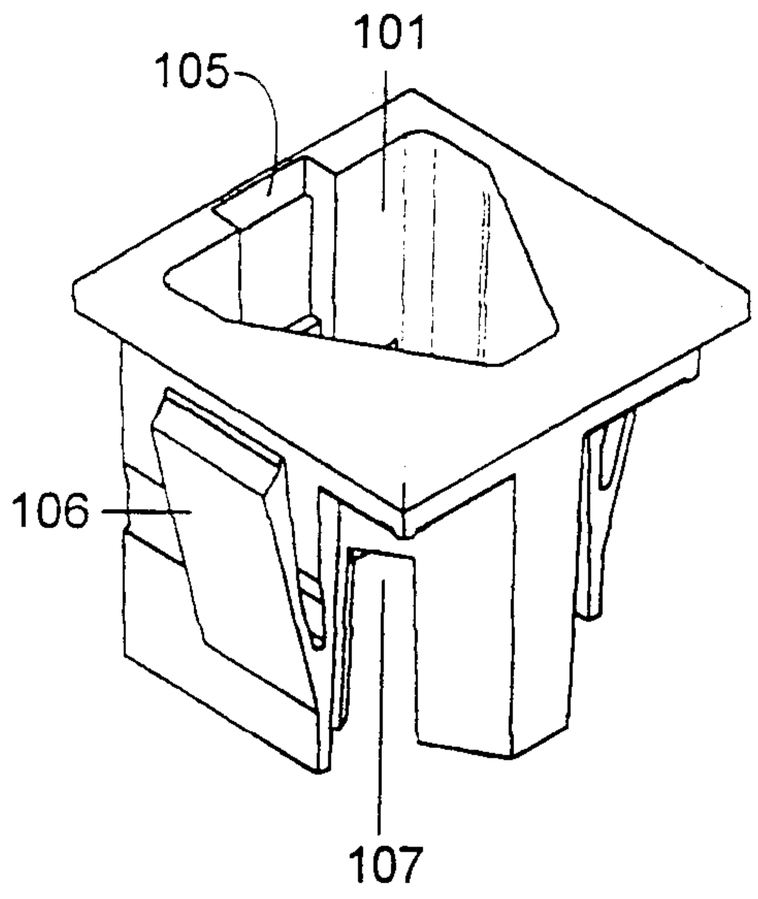

Figure 41

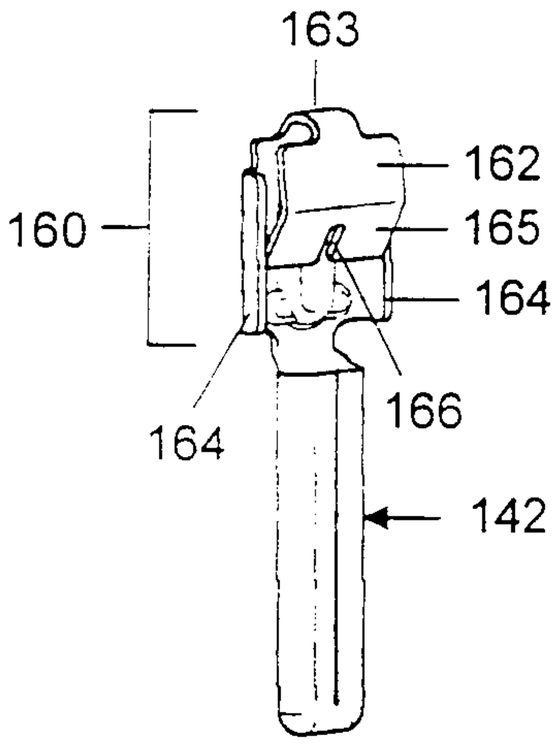

Figure 42

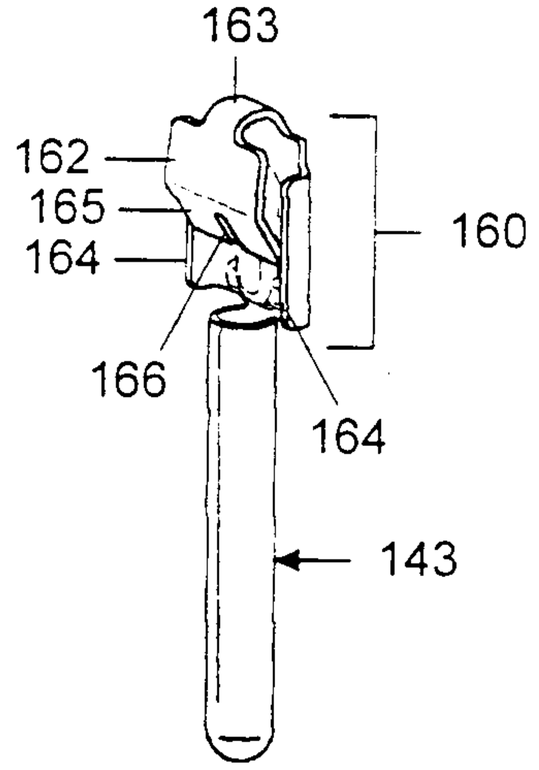

Figure 43

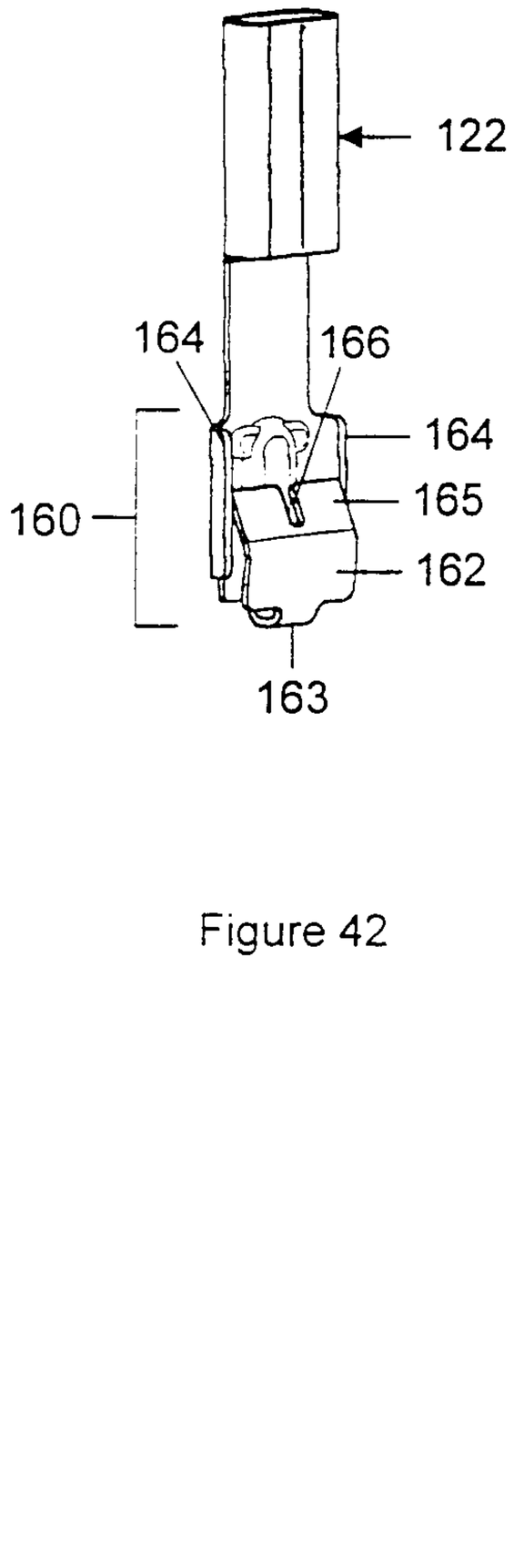

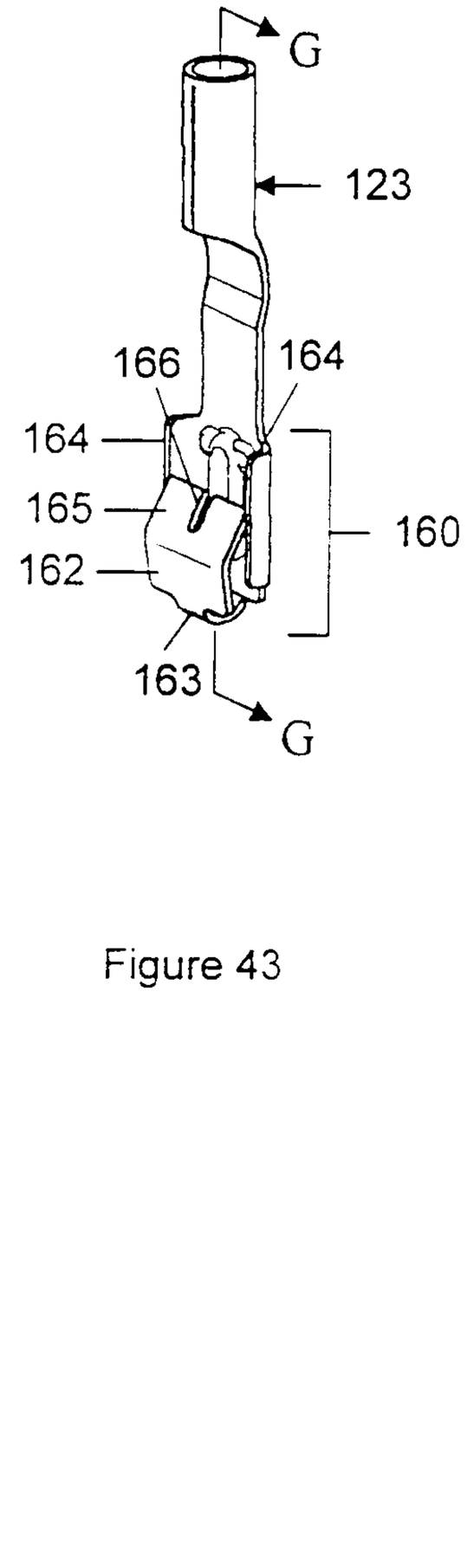

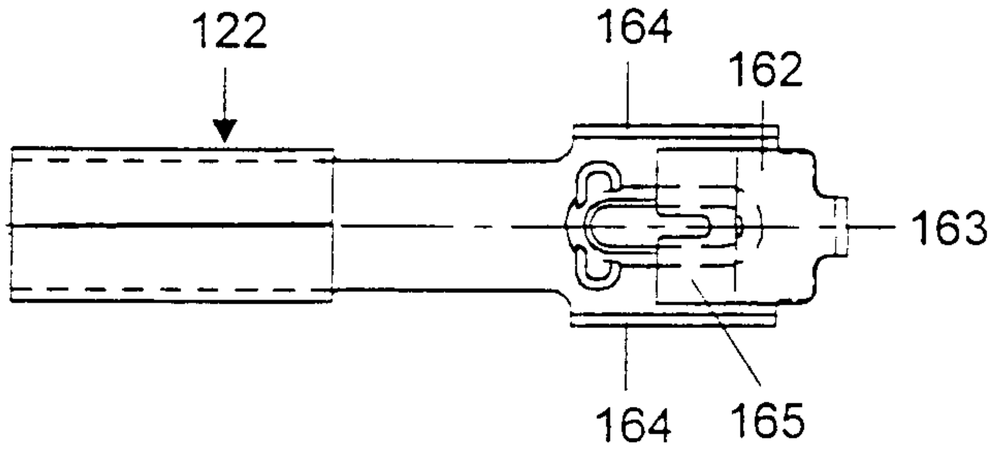

Figure 44

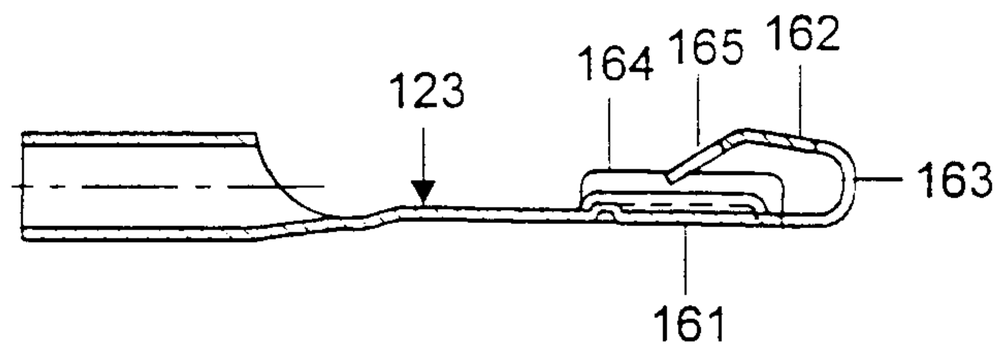

SECTION G-G

Figure 45

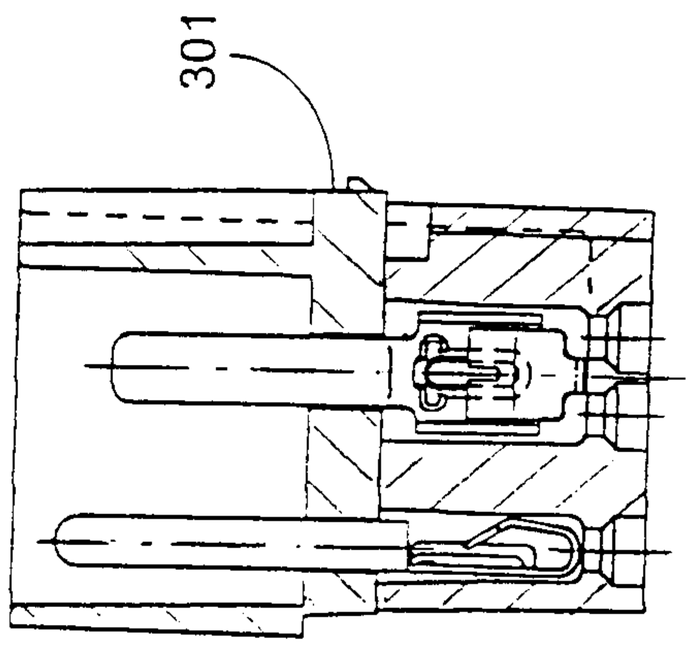

SECTION E-E

Figure 47

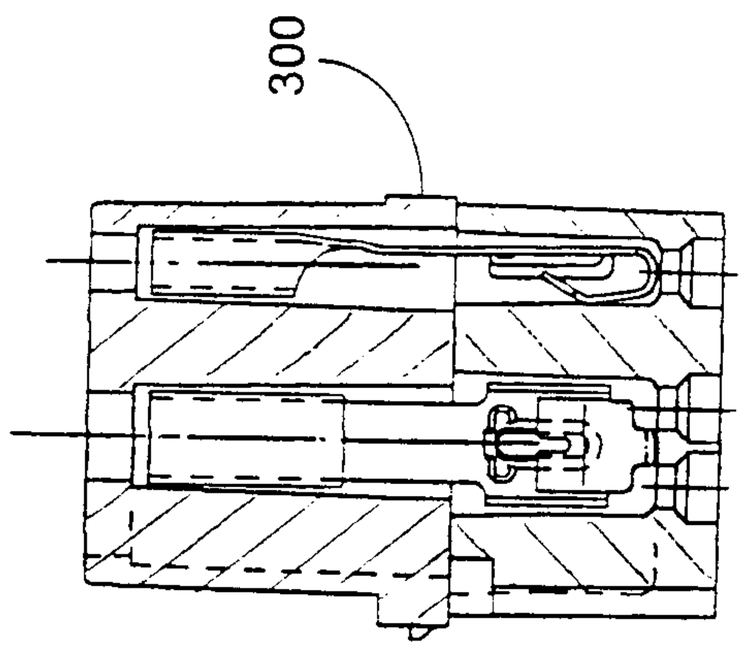

SECTION F-F

Figure 46

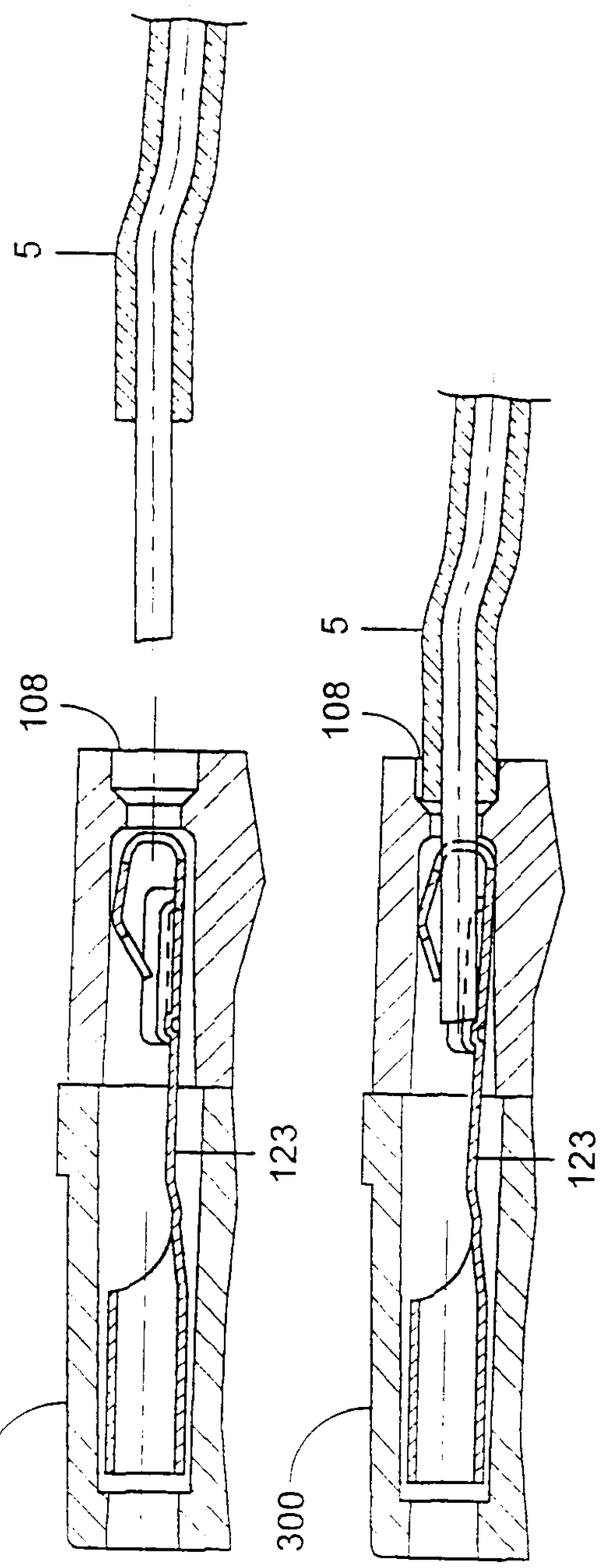

Figure 48

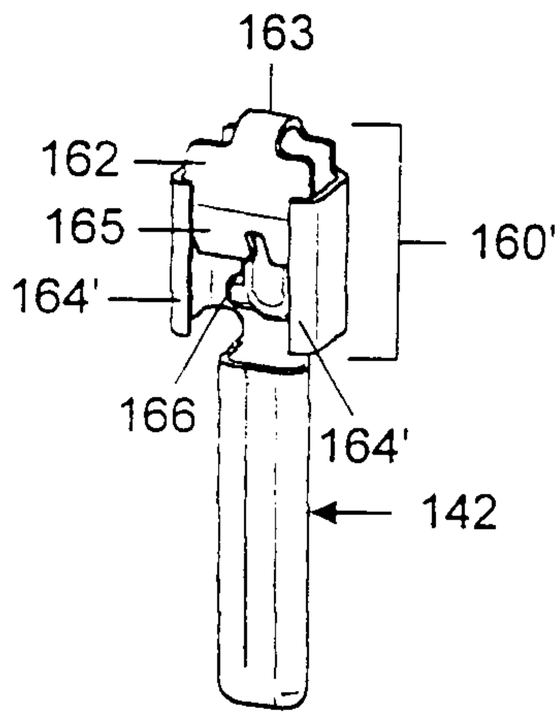

Figure 49

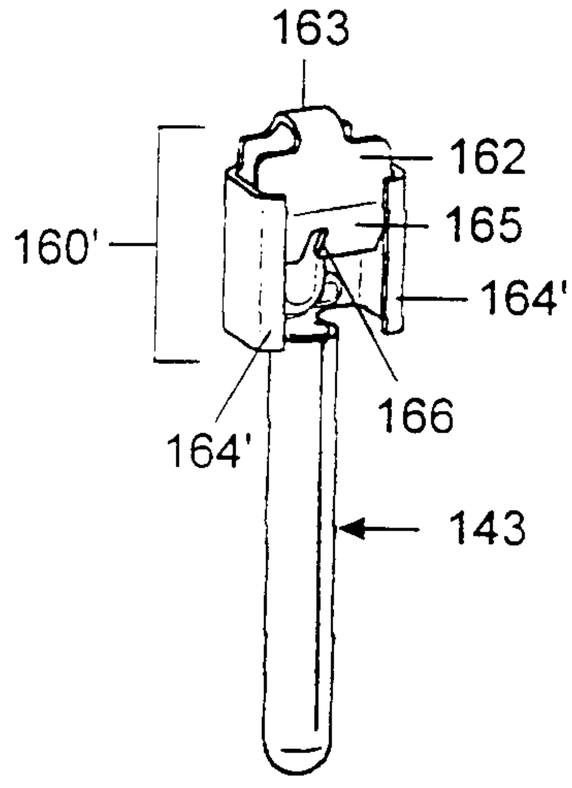

Figure 50

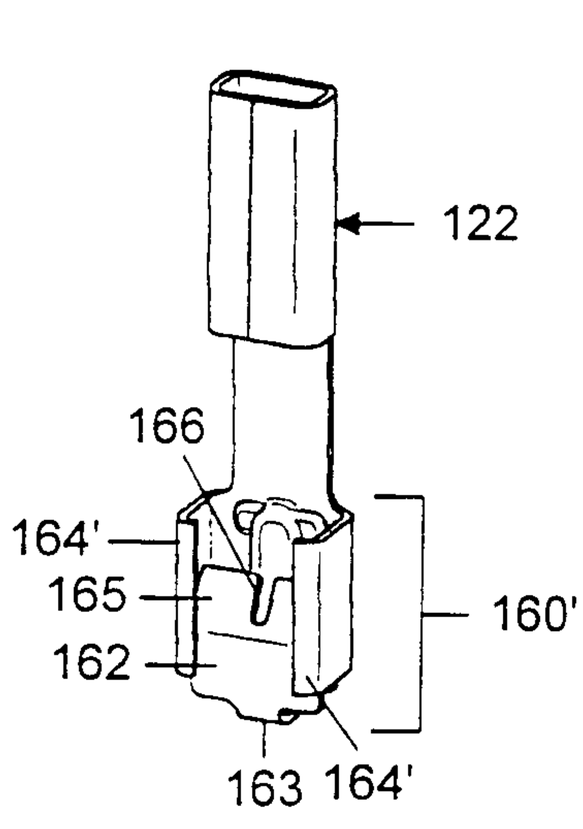

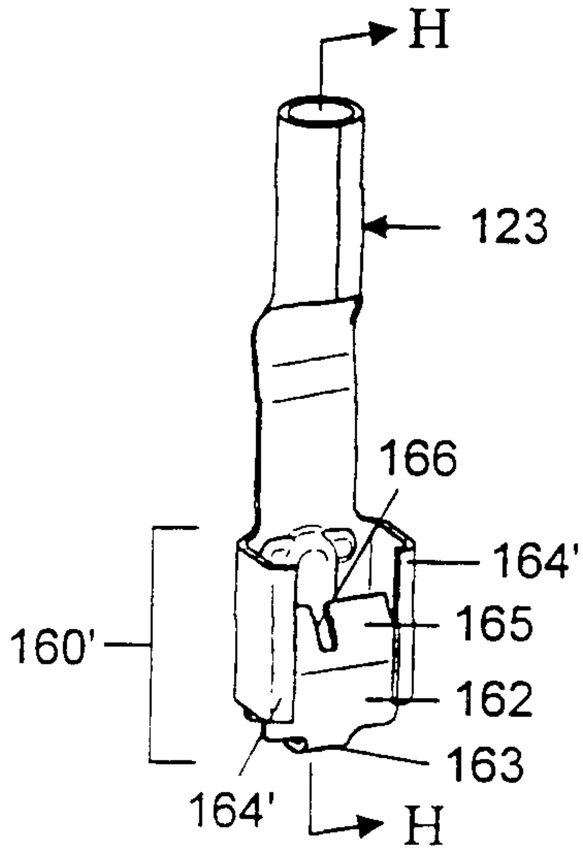

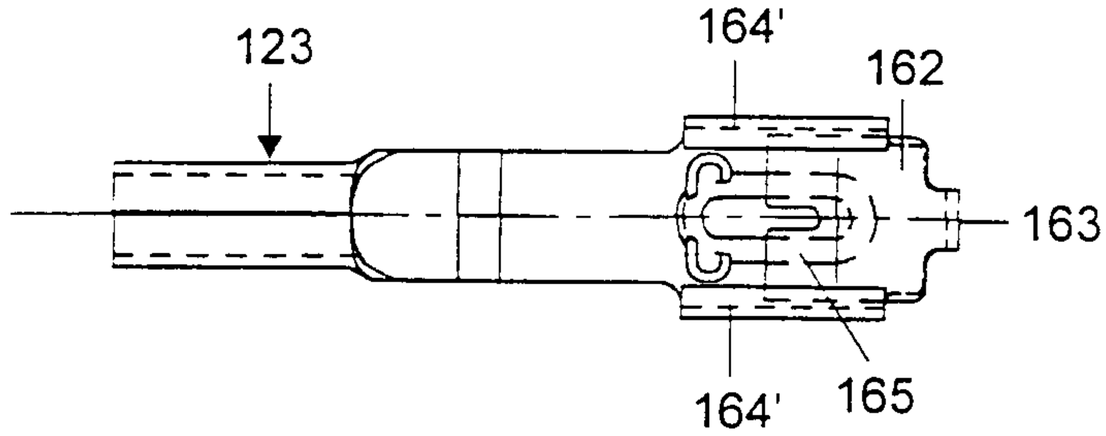

Figure 51

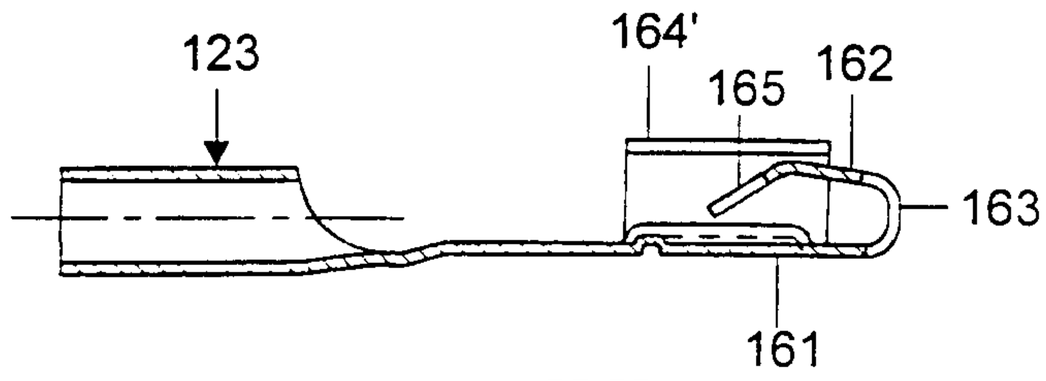

SECTION H-H

Figure 52

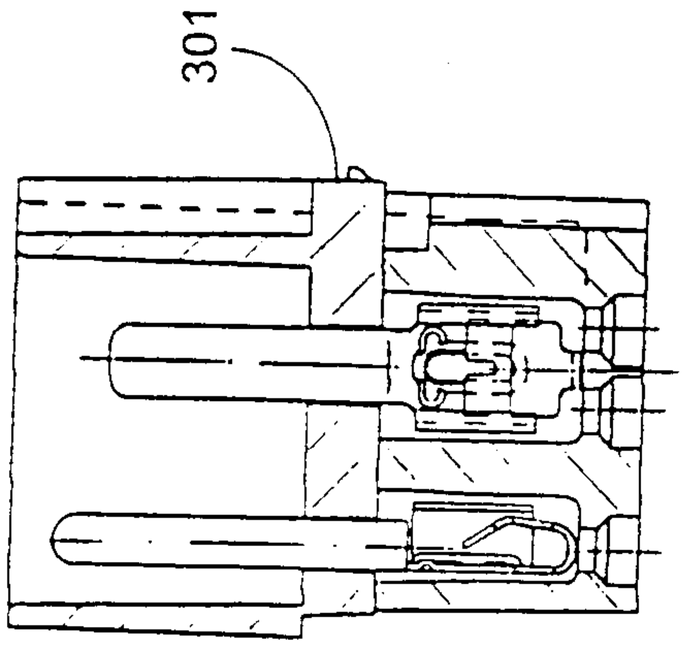

SECTION E-E

Figure 54

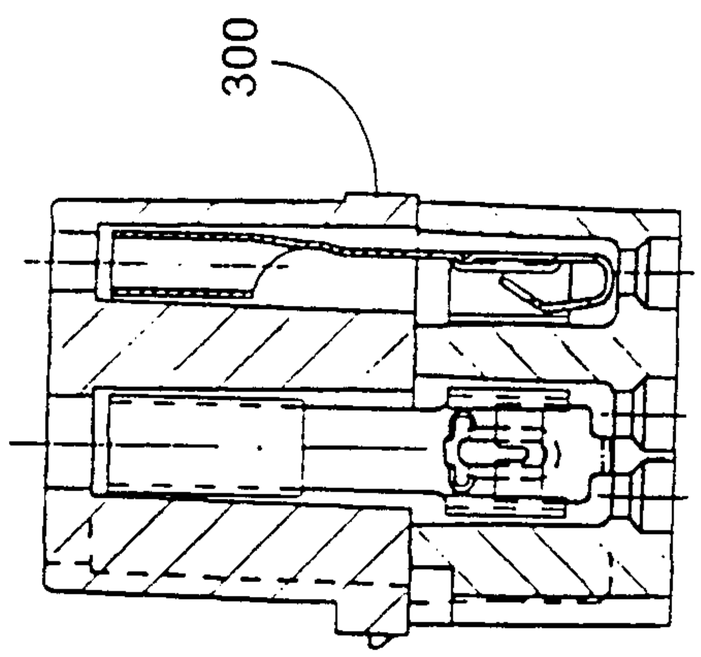

SECTION F-F

Figure 53

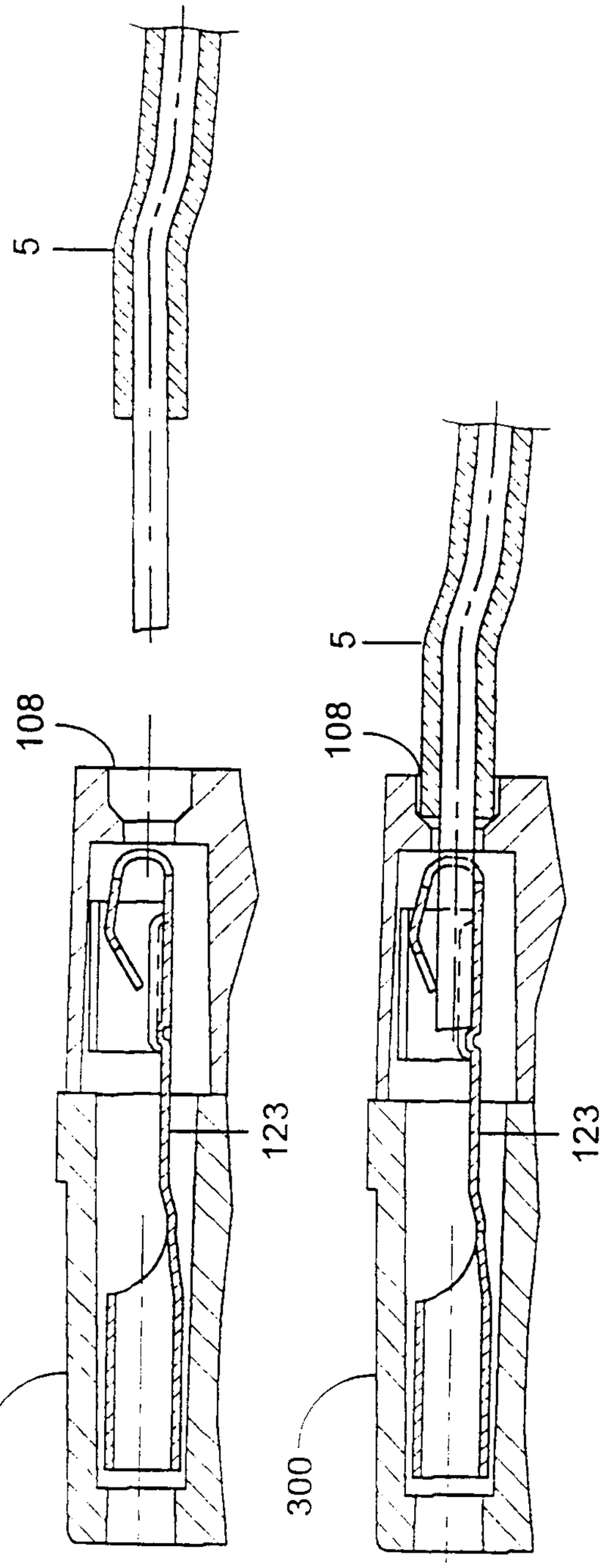

Figure 55

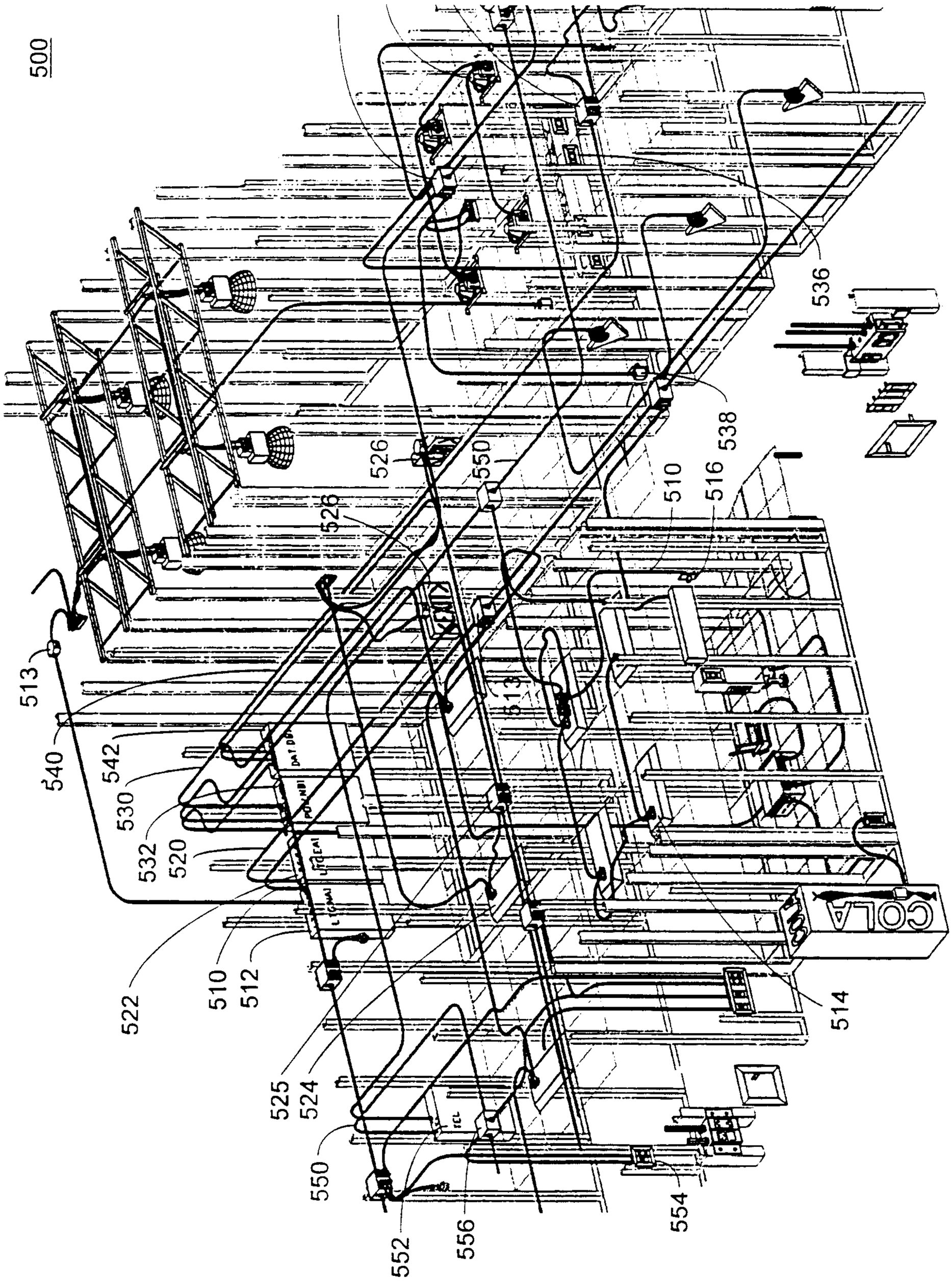
500
536
538
526
550
528
510
516
513
540
542
530
532
520
522
510
512
525
524
550
552
556
554
COLA
514

Figure 56

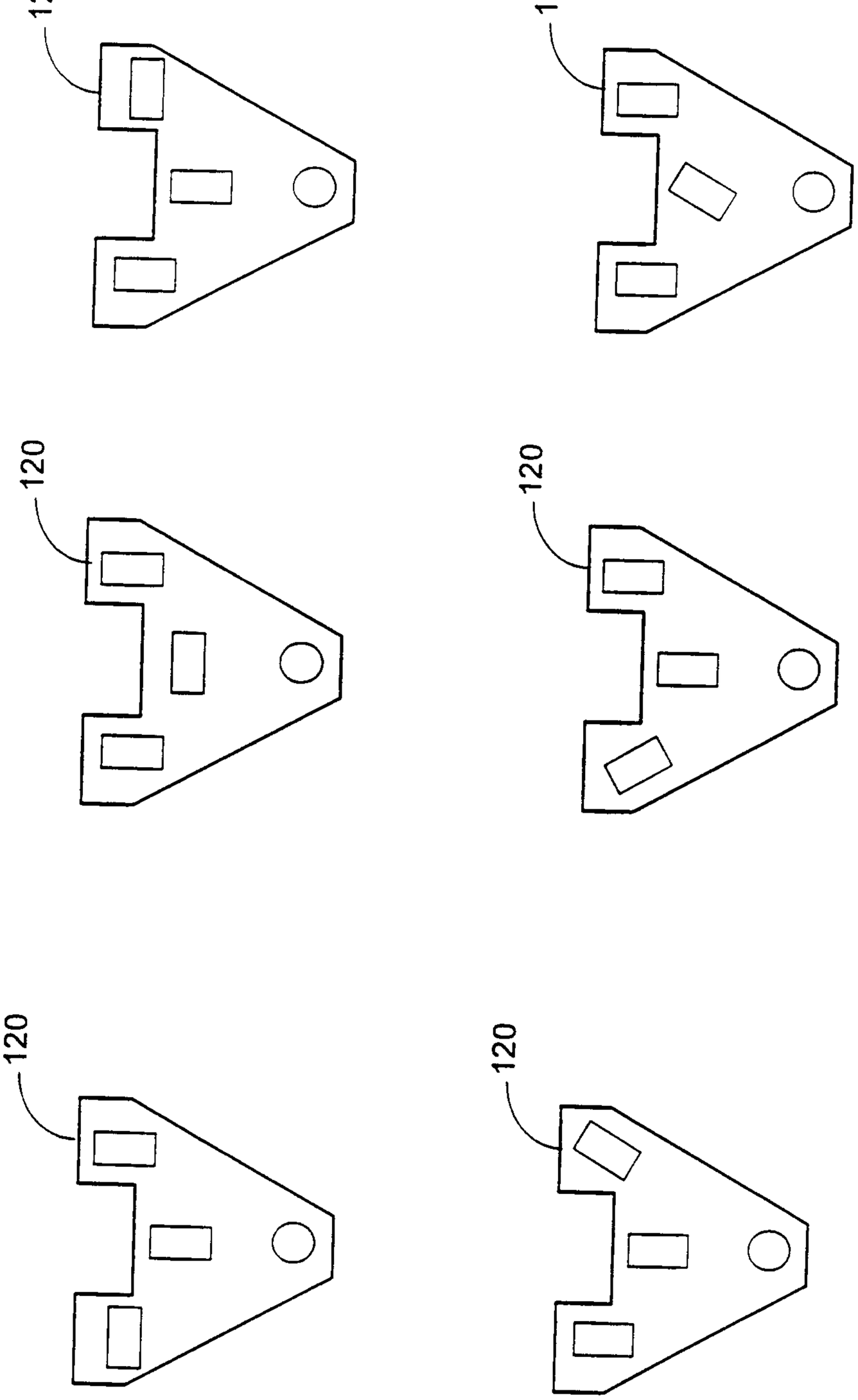

Figure 57

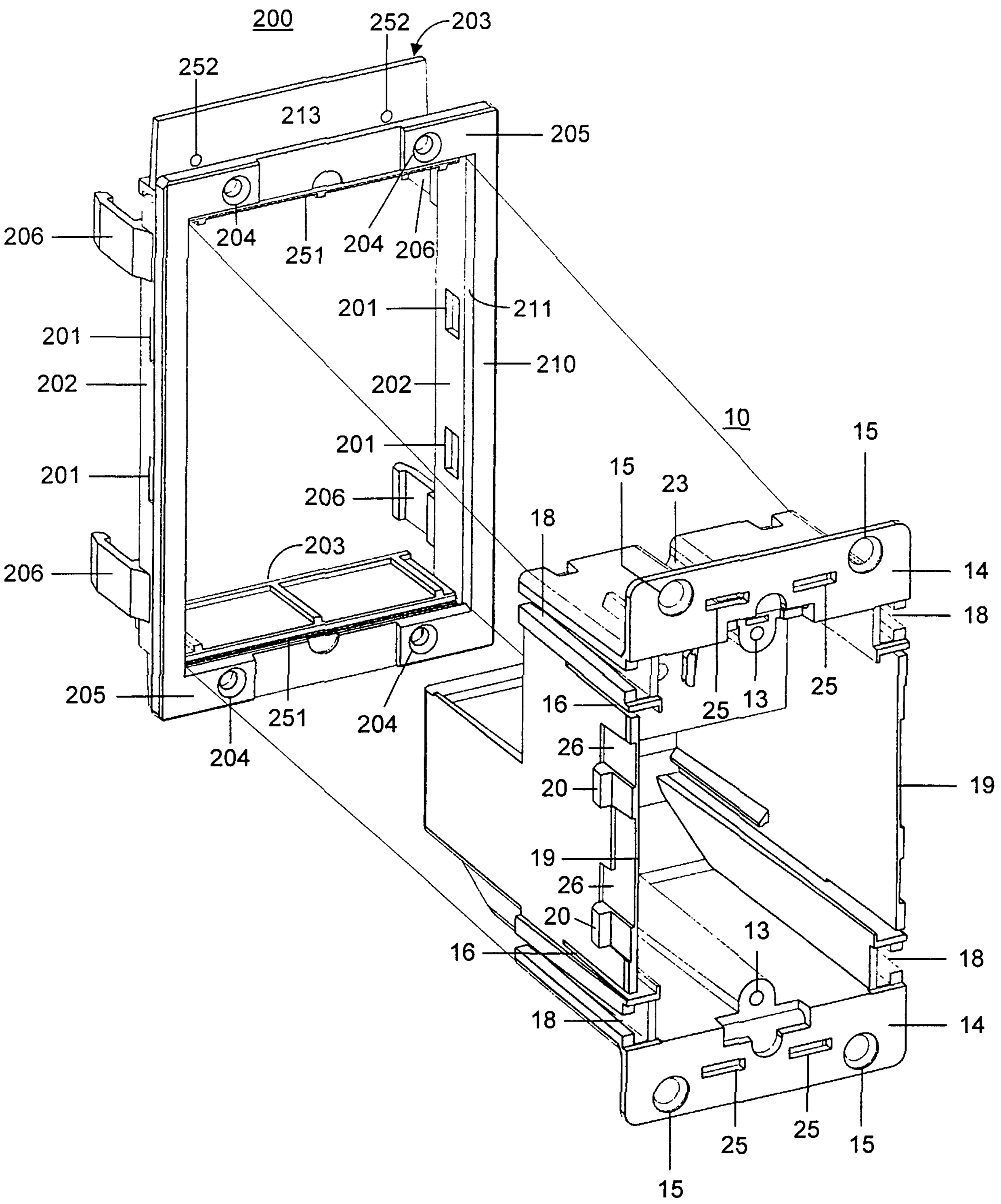
200
252
203
252
213
205
206
204
251
204
206
201
211
201
210
202
202
201
201
206
206
203
205
251
204
204
10
15
15
23
18
14
18
25
13
25
16
26
20
19
19
26
20
13
16
18
18
14
25
25
15
15