Office de la Propriété Intellectuelle du Canada
Un organisme d'Industrie Canada

Canadian Intellectual Property Office
An agency of Industry Canada

CA 2309030 C 2006/01/10

(11)(21) 2 309 030

(12) BREVET CANADIEN
CANADIAN PATENT

(13) C

(86) Date de dépôt PCT/PCT Filing Date: 1998/10/23
(87) Date publication PCT/PCT Publication Date: 1999/05/06
(45) Date de délivrance/Issue Date: 2006/01/10
(85) Entrée phase nationale/National Entry: 2000/04/20
(86) N° demande PCT/PCT Application No.: GB 1998/003179
(87) N° publication PCT/PCT Publication No.: 1999/022071
(30) Priorité/Priority: 1997/10/23 (9722432.3) GB

(51) Cl.Int.^{7}/Int.Cl.^{7} E01B 9/10, E01B 9/12, F16B 35/04

(72) Inventeur/Inventor:
AVAUX, ALAIN, BE

(73) Propriétaire/Owner:
PANDROL LIMITED, GB

(74) Agent: SIM & MCBURNEY

(54) Titre : DISPOSITIF DE FIXATION
(54) Title: FASTENING DEVICE

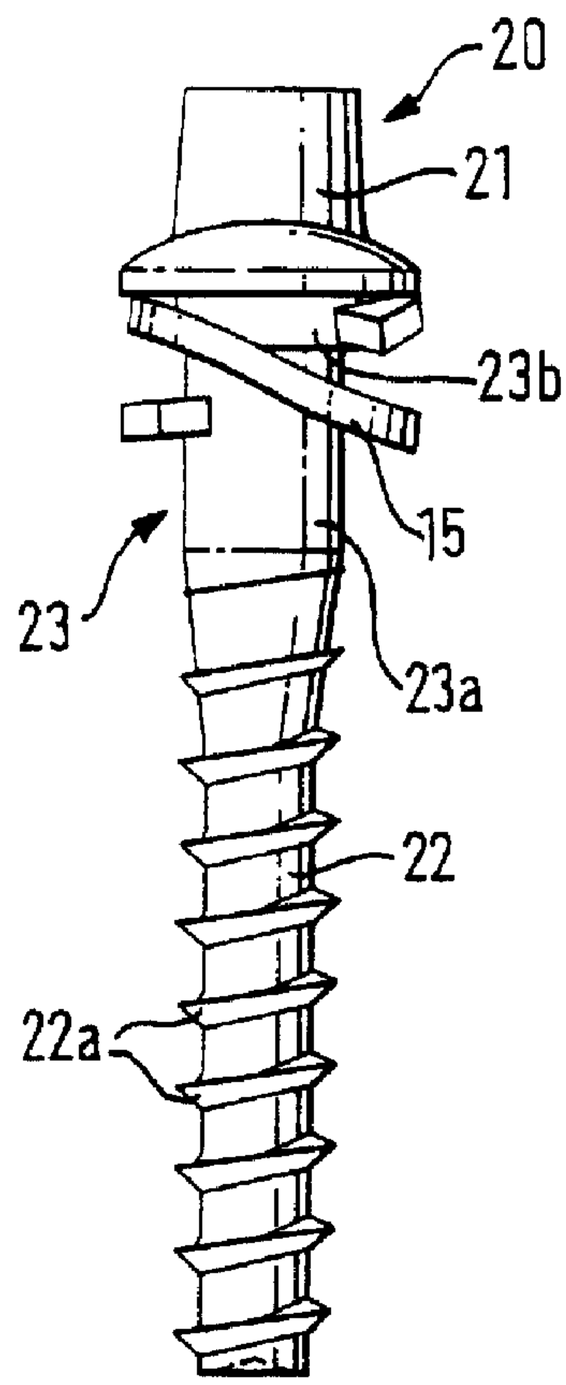

(57) Abrégé/Abstract:
A fastening device (20), for use in holding a base plate down to a railway sleeper, of the type having a head portion (21), a screw-threaded shank portion (22) and an intermediate portion (23) connecting the head portion (21) to the screw-threaded portion (22), the intermediate portion (23) and the screw-threaded portion (22) being of smaller diameter than the head portion (21), is adapted to retain a spring washer (15) on the said intermediate portion (23) prior to use regardless of the orientation of the device.

PCT

WORLD INTELLECTUAL PROPERTY ORGANIZATION
International Bureau

INTERNATIONAL APPLICATION PUBLISHED UNDER THE PATENT COOPERATION TREATY (PCT)

(51) International Patent Classification 6 :
E01B 9/10, 9/12, F16B 35/04

A1

(11) International Publication Number: WO 99/22071

(43) International Publication Date: 6 May 1999 (06.05.99)

(21) International Application Number: PCT/GB98/03179

(22) International Filing Date: 23 October 1998 (23.10.98)

(30) Priority Data:
9722432.3 23 October 1997 (23.10.97) GB

(71) Applicant *(for all designated States except US)*: PANDROL LIMITED [GB/GB]; 63 Station Road, Surrey KT15 2AR (GB).

(72) Inventor; and
(75) Inventor/Applicant *(for US only)*: AVAUX, Alain [BE/BE]; Rue Pont de Bois 53, B–6533 Biercee (BE).

(74) Agent: FENLON, Christine, Lesley; Haseltine Lake & Co., Imperial House, 15–19 Kingsway, London WC2B 6UD (GB).

(81) Designated States: AL, AM, AT, AU, AZ, BA, BB, BG, BR, BY, CA, CH, CN, CU, CZ, DE, DK, EE, ES, FI, GB, GD, GE, GH, GM, HR, HU, ID, IL, IS, JP, KE, KG, KP, KR, KZ, LC, LK, LR, LS, LT, LU, LV, MD, MG, MK, MN, MW, MX, NO, NZ, PL, PT, RO, RU, SD, SE, SG, SI, SK, SL, TJ, TM, TR, TT, UA, UG, US, UZ, VN, YU, ZW, ARIPO patent (GH, GM, KE, LS, MW, SD, SZ, UG, ZW), Eurasian patent (AM, AZ, BY, KG, KZ, MD, RU, TJ, TM), European patent (AT, BE, CH, CY, DE, DK, ES, FI, FR, GB, GR, IE, IT, LU, MC, NL, PT, SE), OAPI patent (BF, BJ, CF, CG, CI, CM, GA, GN, GW, ML, MR, NE, SN, TD, TG).

Published
With international search report.

(54) Title: FASTENING DEVICE

(57) Abstract

A fastening device (20), for use in holding a base plate down to a railway sleeper, of the type having a head portion (21), a screw–threaded shank portion (22) and an intermediate portion (23) connecting the head portion (21) to the screw–threaded portion (22), the intermediate portion (23) and the screw–threaded portion (22) being of smaller diameter than the head portion (21), is adapted to retain a spring washer (15) on the said intermediate portion (23) prior to use regardless of the orientation of the device.

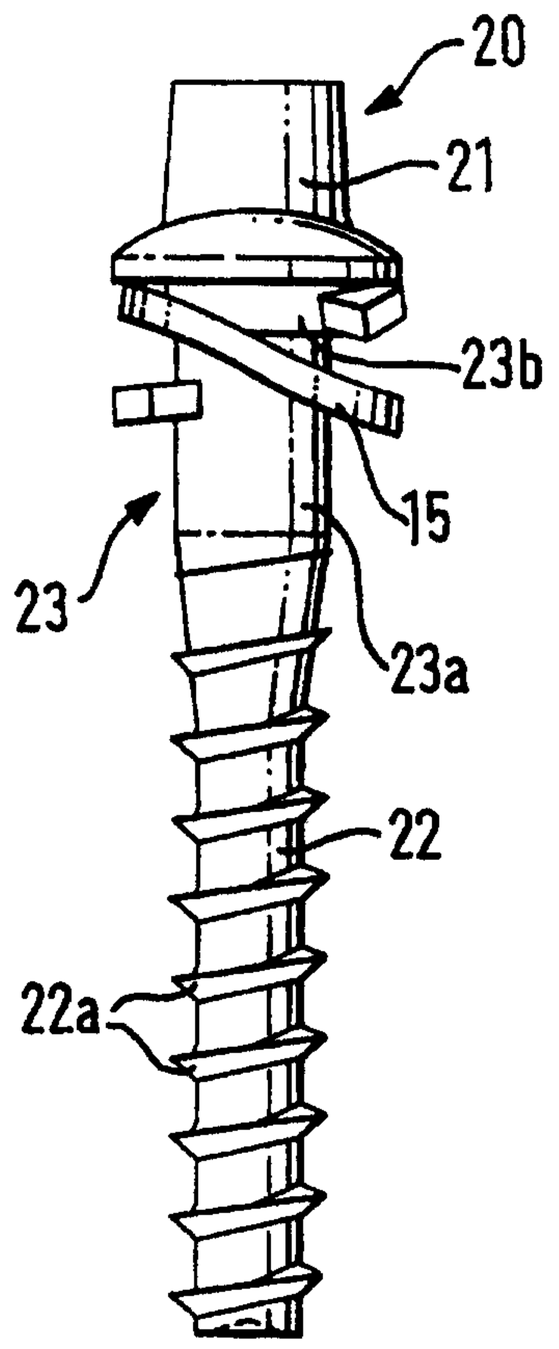

FASTENING DEVICE

The present invention relates to a fastening device for use in holding a base plate down to a railway sleeper, and in particular to the type of fastening device having a head and a screw-threaded shank, commonly known as a screwspike which is used on wooden sleepers.

Screwspikes are used quite widely in Europe, and to an increasing extent in the United States of America. They have some advantages over older types of rail fastenings known as "cutspikes" and "lockspikes" in that, because the screwspike has a screw-threaded shank, screwspikes have less tendency to work loose during use. Many railway authorities believe that this tendency can be further reduced by placing a spring washer under the head of the screwspike, so that a modest load is always applied to the thread of the screw during use.

According to an embodiment of the present invention there is provide a fastening device for use in holding a base plate down to a railway sleeper, the device having a head portion, a screw-threaded shank portion and an intermediate portion connecting the head portion to the screw-threaded shank portion, the intermediate portion and the screw-threaded shank portion being of smaller diameter than the head portion; characterized in that a spring washer is retained on the device prior to use, regardless of the orientation of the device, by means of a washer-retaining part provided on said intermediate portion adjacent to said head portion, said washer-retaining part having a larger external diameter than a part of said intermediate portion adjacent to said screw-threaded shank portion, and said external diameter of said washer-retaining part being uniform along substantially its entire axial length, said spring washer having an internal

diameter sized so as to enable said spring washer to be held resiliently on said washer-retaining part.

Preferably, the external diameter *is* approximately the same as the internal diameter of the spring washer to be retained thereon.

Reference will now be made, by way of example, to the accompanying drawings, in which: -

Figure 1 shows a prior art fastening device;

Figure 2 shows a fastening device embodying the present invention on which a spring washer is retained;

Figure 3 shows the fastening device of Figure 2; and

Figures 4a and 4b show respective side views of the spring washer shown in Figure 2.

The fastening device shown in Figure 1 is of the type known as a screwspike. The screwspike 10 of Figure 1 has a head portion 1, a screw-threaded shank portion 2 having a screw-thread 2a, and an intermediate portion 3 connecting head portion 1 to the screw-threaded shank portion 2. The intermediate portion 3 is of uniform diameter along its entire length. Typically such a screwspike has an overall length of around 197mm, of which the head portion 1 is around 32mm long, the intermediate portion 3 is around 38mm long and the screw-threaded shank portion 2 is around 127mm long. The diameter of the intermediate portion is around 24mm.

A screwspike 20 embodying the present invention and shown in Figures 2 and 3 is a modified version of the screwspike 10. The screwspike 20 has a head portion 21 substantially identical to the head portion 1 of the screwspike 10 and a screw-threaded shank portion 22 with screw-thread 22a substantially identical to the screw-threaded shank portion 2 and screw-thread 2a of the screwspike 10. However, the

screwspike 20 differs from the screwspike 10 in that it has an intermediate portion 23 between the head portion 21 and screw-threaded shank portion 22 having a washer-retaining part 23b which is of larger diameter than the remainder 23a of that intermediate portion 23.

By way of example, a screwspike 20 of overall length 197mm, in which the head portion 21 is around 32mm long, the intermediate portion 23 is around 38mm long and the screw-threaded shank portion 22 is around 127mm long, has a washer-retaining portion 23b with a diameter of around 26mm and a length of around 7mm, the remainder 23a of the intermediate portion 23 having a diameter of around 24mm and a length of around 31mm.

As shown in Figure 2 the screwspike 20 can retain a spring washer 15 (shown in more detail in Figures 4a and 4b) on its washer-retaining part 23b. The outside diameter of the washer-retaining part 23b is chosen such that it is similar to the inside diameter of the spring washer 15 to be retained. Thus, when the spring washer 15 is pushed onto the washer-retaining part 23b of the screwspike 20 the spring washer 15 deflects slightly and one of its free ends 15a digs into the washer-retaining part 23b, fixing it firmly in place. The length of the washer-retaining part 23b is determined such that it is long enough to retain the top coil of the spring washer 15, but is not so long as to interfere with the compression of the rest of the spring washer 15 when in use.

Therefore, in this way, a screwspike embodying the present invention, such as the screwspike 20, can be applied to a railway track with a spring washer 15 already attached to it. This can enable the installation procedure to be speeded up by reducing the amount of labour involved. In particular, nowadays screwspikes are often installed in track by drilling holes in the sleeper, using the holes in the base plate

as a jig, with a simple track-mounted machine, and then applying the screwspikes with a second simple track-mounted machine. This second machine has a magazine into which the screwspikes are fed and then inserted into the holes and screwed down by the machine. If the screwspikes are to be used with washers, however, such a machine cannot be used, since the machine cannot thread washers onto the screwspikes automatically nor can it hold the washers in the correct place on the screwspikes as they pass through the magazine and are subsequently screwed into holes in the sleepers. However, a spring washer 15 could be retained on a screwspike embodying the present invention without any need for special handling by the machine. Moreover, screwspikes embodying the present invention would enable the logistical problem of shipping equal numbers of screwspikes and washers to site to be reduced. The possibilities for wastage of surplus washers or screwspikes which might otherwise be discarded are similarly reduced.

Although at present fastening devices of the screwspike type are used on wooden sleepers, it is envisaged that in future screwspike-type fastening devices such as that embodying the present invention might also be used on sleepers made of other materials, such as plastics material or concrete (provided with nylon inserts for receiving the screwspike).

CLAIMS

1. A fastening device for use in holding a base plate down to a railway sleeper, the device having a head portion, a screw-threaded shank portion and an intermediate portion connecting the head portion to the screw-threaded shank portion, the intermediate portion and the screw-threaded shank portion being of smaller diameter than the head portion; characterized in that a spring washer is retained on the device prior to use, regardless of the orientation of the device, by means of a washer-retaining part provided on said intermediate portion adjacent to said head portion, said washer-retaining part having a larger external diameter than a part of said intermediate portion adjacent to said screw-threaded shank portion, and said external diameter of said washer-retaining part being uniform along substantially its entire axial length, said spring washer having an internal diameter sized so as to enable said spring washer to be held resiliently on said washer-retaining part.

2. A fastening device as claimed in claim 1, wherein said external diameter of said washer-retaining part is approximately the same as said internal diameter of said spring washer.

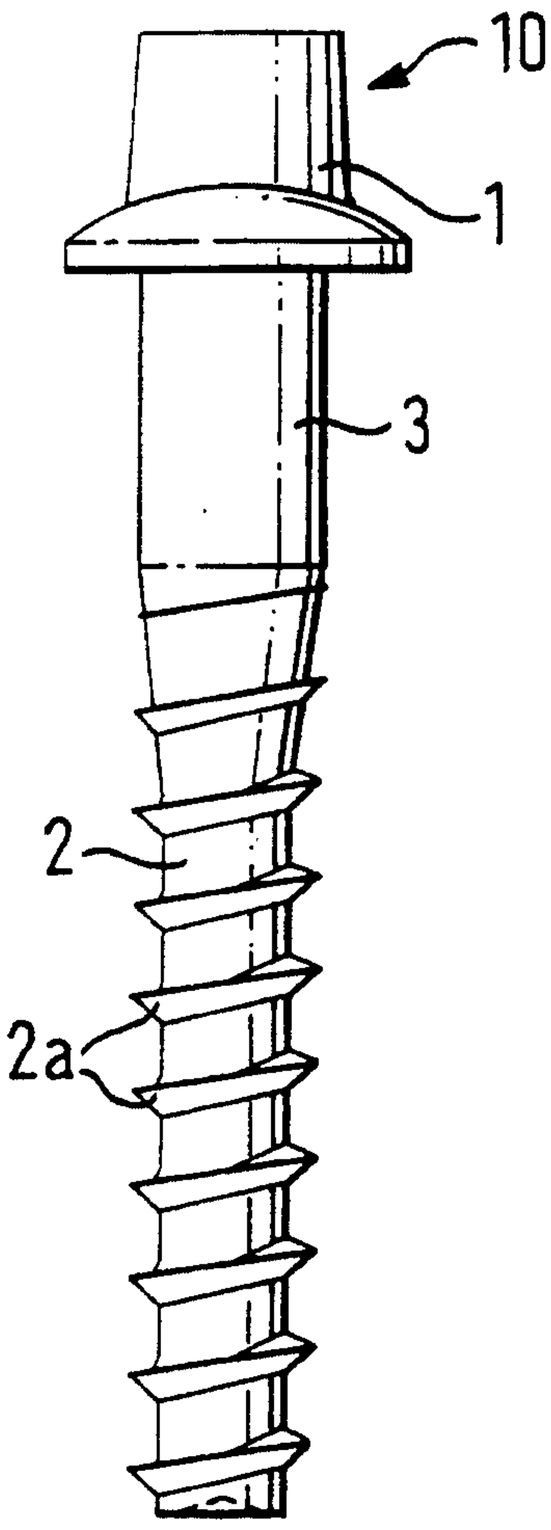

FIG. 1

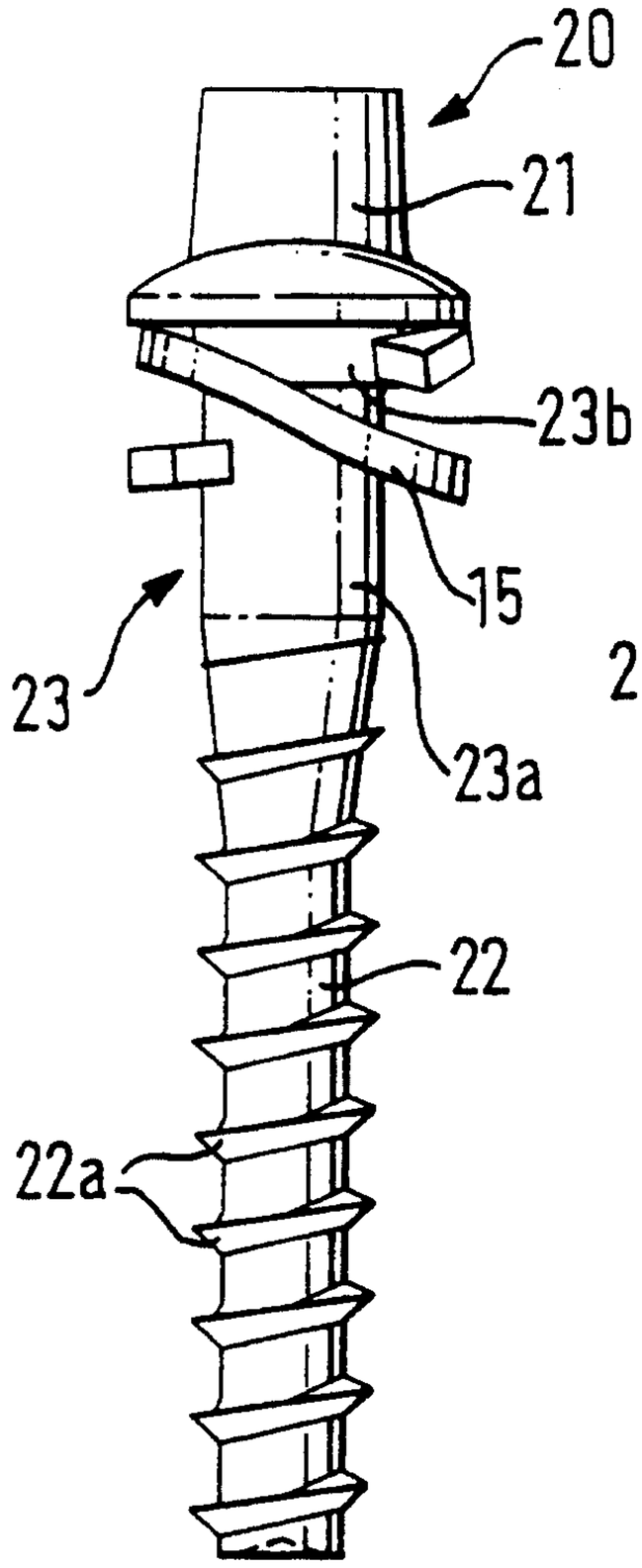

FIG. 2

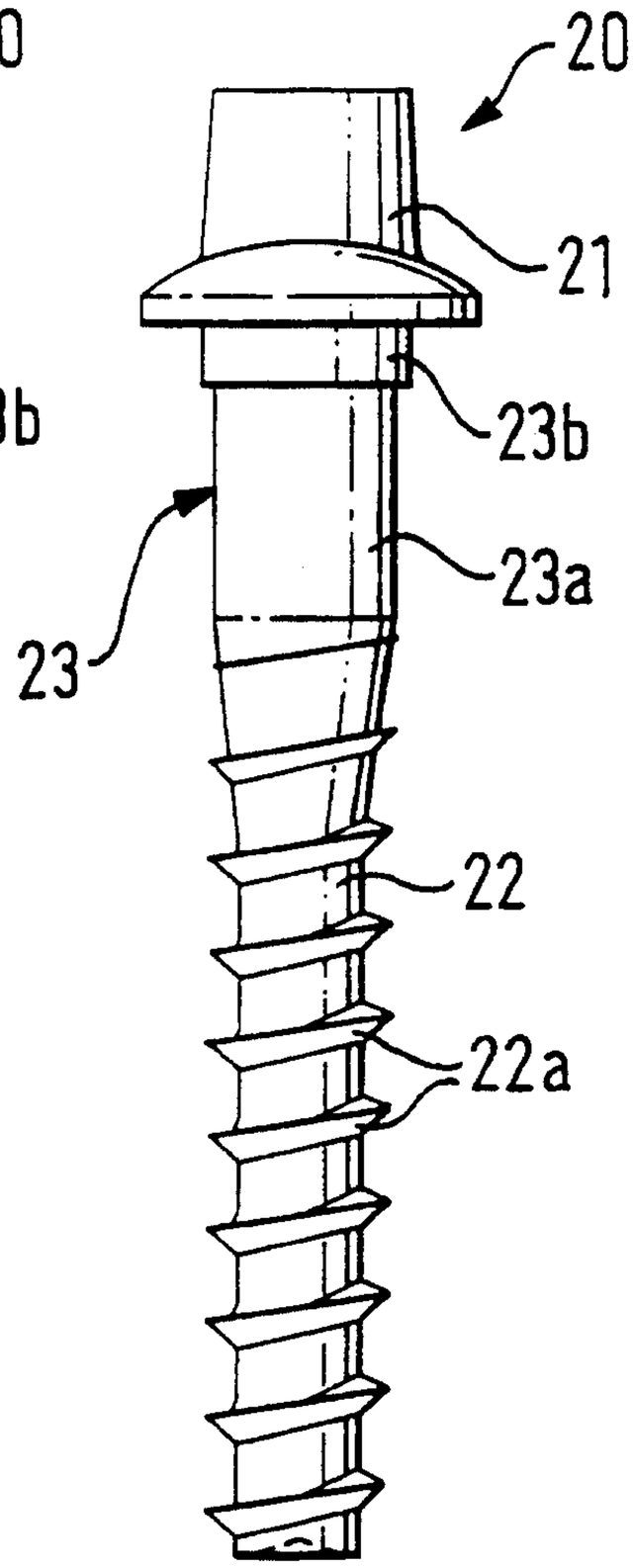

FIG. 3

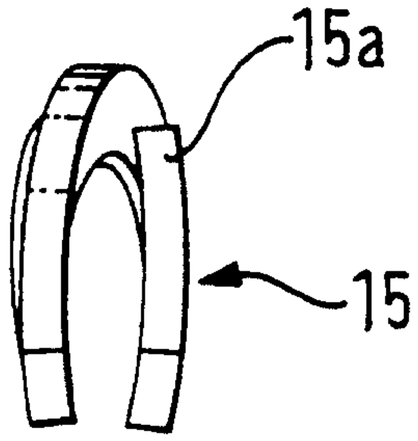

FIG. 4a

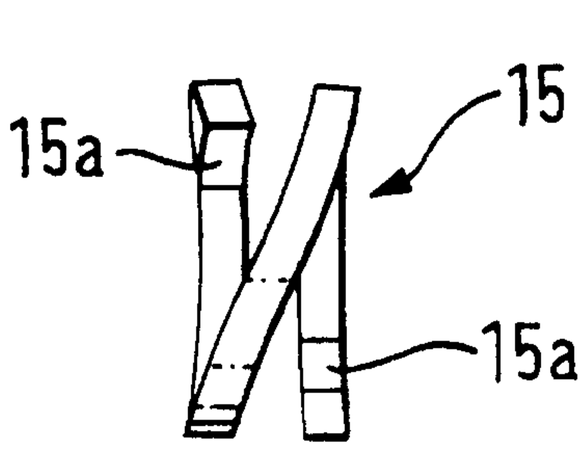

FIG. 4b

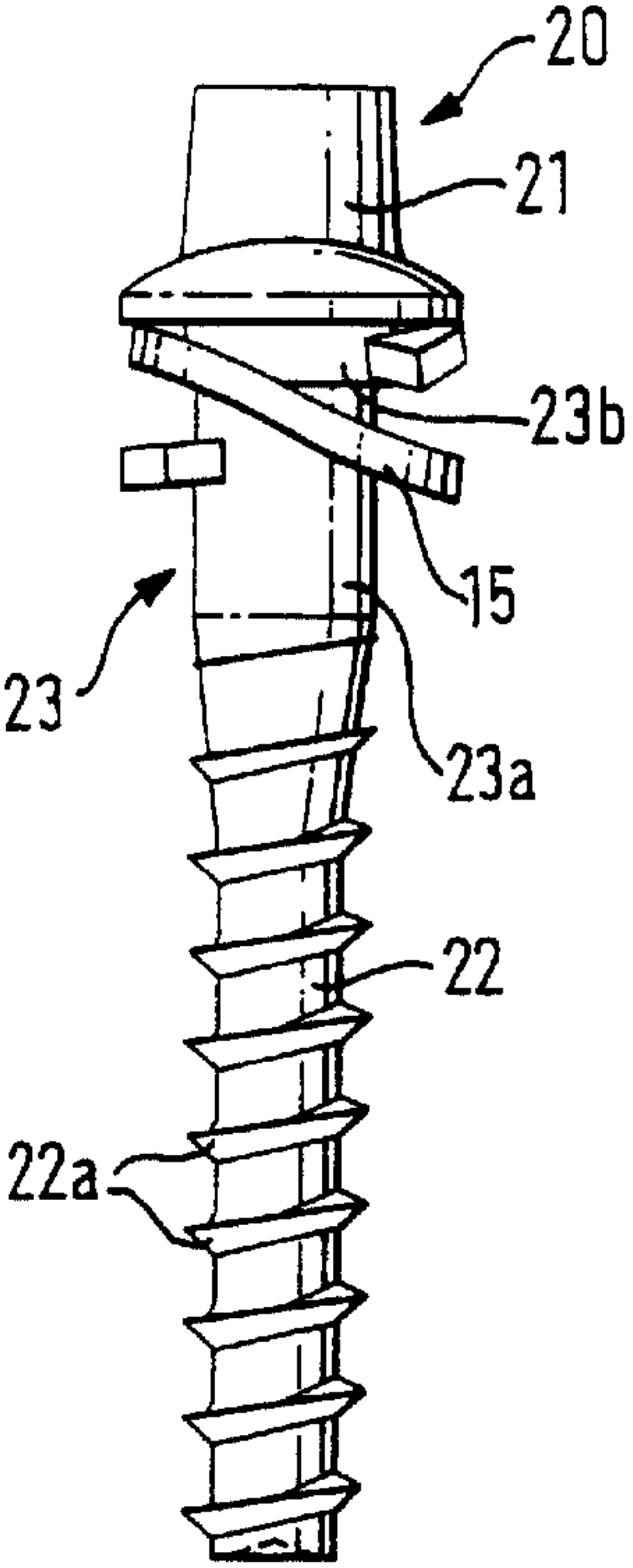
20
21
23b
15
23
23a
22
22a