Dec. 2, 1924. 1,517,926

O. H. WECKESSER

WASHING DEVICE

Filed March 7, 1922

FIG. 1

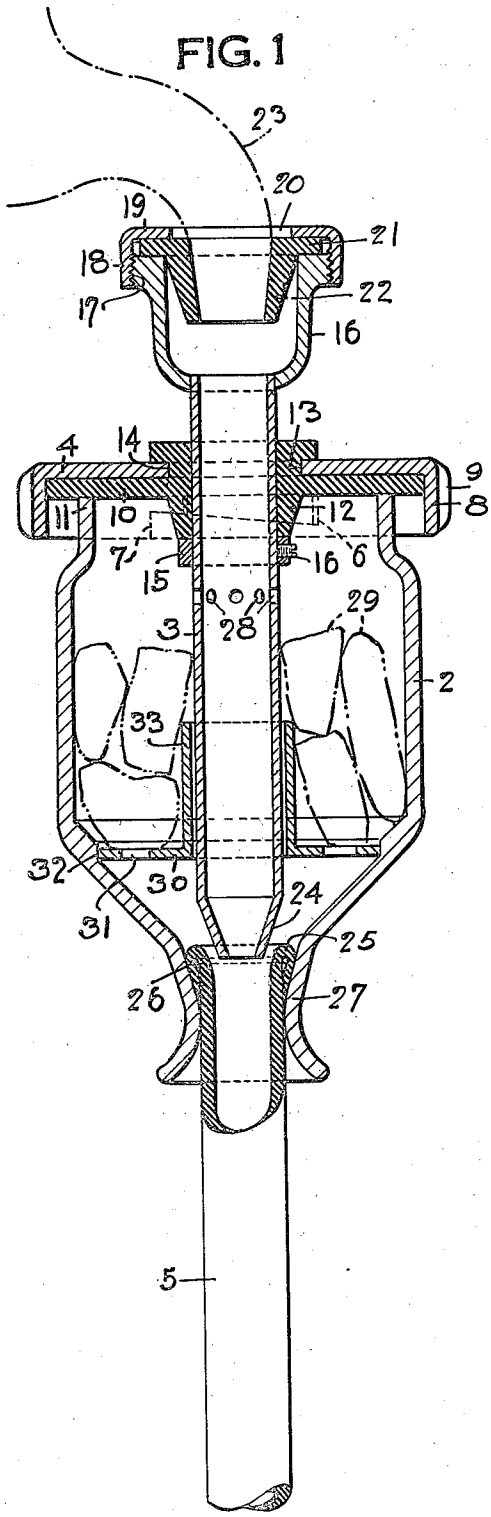

FIG. 2

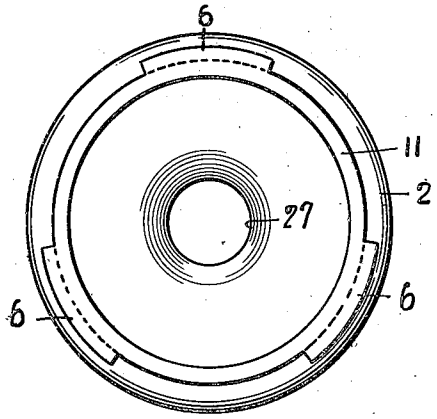

FIG. 3

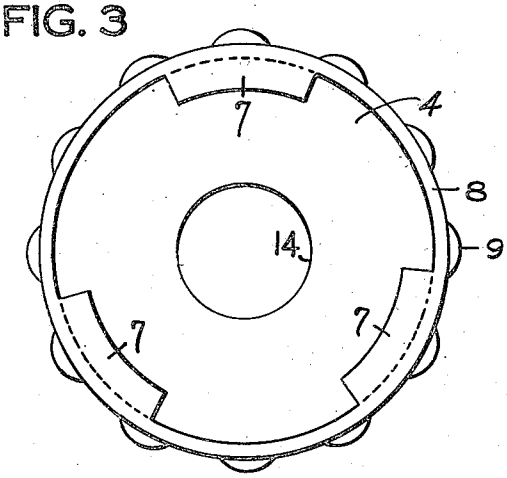

FIG. 4

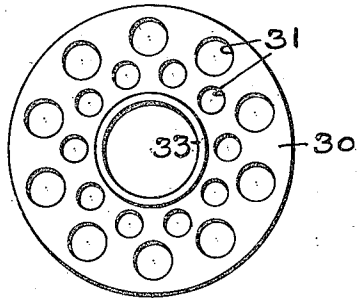

INVENTOR

Oscar H. Weckesser,

By Kay Totten & Brown,

Attorneys

Patented Dec. 2, 1924. 1,517,926

UNITED STATES PATENT OFFICE.

OSCAR H. WECKESSER, OF PITTSBURGH, PENNSYLVANIA.

WASHING DEVICE.

Application filed March 7, 1922. Serial No. 541,698.

To all whom it may concern:

Be it known that I, OSCAR H. WECKESSER, a citizen of the United States, and resident of Pittsburgh, in the county of Allegheny and State of Pennsylvania, have invented new and useful Improvement in Washing Devices; and I do hereby declare the following to be a full, clear, and exact description thereof.

My invention relates to washing devices, and has special reference to devices for washing household dishes, although it may also be used for other purposes.

The object of my invention is to provide a simple and inexpensive device which may be readily attached to any ordinary spigot or other source of water, and which is arranged to supply, at will, either clear water or a mixture of water and soap or other cleansing substance.

This device consists, in general, of a bowl for containing soap or other detergent material, the bowl being mounted on a tubular stem which forms a water channel and which is arranged at one end for attachment to the source of water and discharges at its other end into a hose leading to a spray or other suitable outlet. In one position of the bowl on the stem, a portion of the water is diverted from the stem into contact with the soap in the bowl, and joins the main portion of the stream at the outlet from the stem. In another position of the bowl on the stem the water flows through the stem without coming into contact with the soap. The selection of clear water or soapy water is thus made by simply moving the bowl a short distance upon the tube.

In the accompanying drawing, Fig. 1 is a longitudinal sectional view taken centrally through a complete device constructed in accordance with my invention; Fig. 2 is a plan view of the bowl with the cover removed; Fig. 3 is a bottom plan view of the cover of the bowl; and Fig. 4 is a plan view of the strainer.

As shown in the drawing, the main parts of the device are a bowl 2, a tubular supporting stem 3, a cover 4 and a discharge hose 5. The bowl 2 may suitably be pressed from sheet metal, preferably aluminum, and is provided near its upper edge with external spiral lugs 6 which engage similar lugs 7 formed on the inner surface of a depending flange 8 which forms a part of the cover 4. The cover 4 may be pressed from aluminum or other suitable metal, and is provided with projections 9 forming hand grips for turning the cover to lock the cover on the bowl by engagement of the lugs 6 and 7.

A grip washer 10 is interposed between the cover 4 and the upper edge 11 of the bowl 2 in order to form a water-tight joint. This grip washer consists of a disc of rubber or other flexible material of approximately the same diameter as the interior of the cover 4 and is provided with a central grip member 12, the interior bore of which is sufficient to grip the stem 3 tightly but slidably. A groove 13 is provided in the upper portion of the member 12 to receive the edges of a central opening 14 formed in the cover 4.

A collar 15 is adjustably secured to the stem 3 below the bushing 10 by means of a set screw 16 or otherwise, and limits the downward movement of the bowl 2 with respect to the stem 3.

The stem 3, which may suitably be composed of brass tubing, is soldered, brazed, or otherwise attached at its upper end to a bowl-shaped coupling 16, the upper edge of which is screw-threaded as shown at 17, to receive the screw-threaded flange 18 of a cap 19 having a central opening 20. The flange 21 of a rubber spigot grip 22 is clamped between the cap 19 and the upper edge of the coupling 16. The spigot grip 22 has a central opening of the proper size to fit tightly over an ordinary sink spigot 23. Spigot grips of various sizes may be provided to fit spigots of different sizes and shapes, and the opening 20 in the cap 19 is made large enough to admit the largest ordinary spigot.

The lower end of the stem 3 is tapered, as shown at 24, and extends into the upper end of the hose 5. This hose may conveniently be secured in place by turning back its upper edge 25 over a metal ring 26 and vulcanizing the rubber at this point to form a permanent flange or rib which seats the hose tightly in the tapered lower opening 27 of the bowl 2.

One or more openings 28 are formed in the stem 3 within the bowl 2 in order to admit water from the stem 3 into the space surrounding the stem, which may contain pieces of soap or other detergent material, as shown at 29. Several of the openings 28 are preferably provided, in order to distribute the water to all parts of the soap

chamber. The soap is held in place by means of a strainer 30 having openings 31 for the passage of soap solution. The strainer 30 may suitably rest in a seat 32 formed in the tapered lower sides of the bowl 2, and may be provided with a flange 33 surrounding the stem 3 and forming a guide for the stem.

In assembling the device, a spigot grip 22 of suitable size is clamped in place in the stem coupler, the grip washer 10 is assembled with the bowl cover 4, the stem 3 is inserted through the grip washer 10, and the set collar 15 is fastened to the stem, thus completing the first unit, consisting of the stem and bowl cover.

The second unit is made by inserting the hose 5 from above through the lower opening 27 in the bowl, and drawing the hose down until the rib around its upper end is seated tightly in the outlet opening of the bowl. The strainer 30 is placed in the bowl and soap fragments or other desired cleansing material are placed in the bowl upon the strainer. The two units are then assembled by inserting the stem 3 through the guide flange 33 and securing the cover to the bowl by means of the spiral lugs 6 and 7. The device is then ready to be attached to the spigot 23 or other source of water supply by means of the rubber grip 22.

When it is desired to secure soapy water for washing, the bowl is lowered on the stem until stopped by the set collar 12, which is the position of the parts shown on Fig. 1. As the water descends in the stem 3 its flow is checked somewhat by the tapered lower end 24 of the stem, and a portion of the water is diverted through the openings 28 into the space which contains the soap. The small outlet at the lower end of the stem 3 discharges water at a velocity greater than the normal velocity of the water supplied to the device, and this increased velocity creates a siphonic action on the soapy water at the entrance of the hose 5 and thoroughly mixes the soap and clear water. Since the hose 5 is of substantially the same diameter as the intake, the loss in pressure in the device is reduced to a minimum.

When it is desired to shut off the soapy water and supply only clear water, the bowl 2 is grasped and raised on the stem 3 with a turning and lifting movement until the tapered lower end 24 of the stem is seated in the upper end of the hose 5. This shuts off communication between the hose and the soap chamber and prevents the soap solution from entering the hose either around the lower end of the stem 3 or through the openings 28. Clear water is therefore delivered as long as the device is in this position.

In order to permit the bowl to be raised and lowered upon the stem the cover grip 12 is made with less holding power than the grip 22 on the spigot. However, the cover grip is sufficiently strong to hold the lower end of the stem securely against the rubber hose.

It will be evident that, instead of supporting the device from the stem and moving the bowl to change from soapy water to clear water or the reverse, the bowl may be supported in stationary position and the adjustment made by moving the stem. In this case the water connection to the stem is made through a flexible hose.

Various other changes in the construction and arrangement of parts may doubtless be made without departing from my invention, and I therefore wish it to be understood that my invention is not limited except by the scope of the appended claims.

I claim as my invention:

1. A washing device comprising a casing having a space adapted to contain soap or other soluble material, a straight and continuously open channel for conducting water through said casing and having an opening into said space, and means for selectively causing the water to flow through said channel without entering said space or for diverting a portion of the flowing water from said channel into said space and thereafter uniting said diverted water with the main stream, said selective means comprising a discharge opening from said casing to said channel, and means for opening said discharge opening.

2. A washing device comprising a casing having a space adapted to contain soap or other soluble material, a straight and continuously open channel for conducting water through said casing and having a lateral opening into said space, a restriction in said channel for retarding the flow of water and for thereafter discharging water from said channel at an increased rate, and means for selectively causing the discharge end of said channel to communicate with said space or for shutting off communication between said channel and said space.

3. A washing device comprising a casing, a straight and continuously open tube extending into said casing and having a lateral opening, means for connecting said tube to a source of water, means for receiving water from said tube and for discharging the water from said casing, and means for selectively diverting a portion of the flowing water into the space surrounding said tube, or for causing the flowing water to pass through said tube and out of said casing without entering said space, said selective means comprising a discharge opening from said casing to said channel, and means for opening said discharge opening.

4. A washing device comprising a casing, a straight and continuously open tube extending slidably into said casing and having one or more openings in its walls, means for connecting one end of said tube to a source of water and means for receiving water from the other end of said tube and for conducting said water from said casing.

5. A washing device comprising a casing, a tube extending slidably into said casing and having one or more outlet openings in its walls, means for connecting one end of said tube to a source of water and means for receiving water from the other end of said tube and for conducting said water from said casing, the said water-receiving means being selectively engaged with the discharge end of said tube or spaced therefrom.

6. A washing device comprising a casing, a tube extending slidably into said casing and having one or more outlet openings in its walls, means for connecting one end of said tube to a source of water, and a discharge hose having one end within said casing and forming a seat for the discharge end of said tube.

7. A washing device comprising a casing, a tube extending slidably into said casing and having one or more outlet openings in its walls, the inner end of said tube being of reduced diameter, means for connecting said tube to a source of water, and a discharge hose having one end within said casing and forming a seat for the reduced inner end of said tube.

8. A washing device comprising a casing, a tube extending slidably into said casing, said tube having one or more outlet openings in its walls and having a tapered discharge end, means for connecting the intake end of said tube to a source of water, and a discharge hose having one end within said casing and forming a seat for the discharge end of said tube.

9. A washing device comprising a casing, a tube extending slidably into said casing, said tube having one or more outlet openings in its walls and having a tapered discharge end, means for connecting the intake end of said tube to a source of water, a discharge hose having one end within said casing and forming a seat for the discharge end of said tube, and means for limiting the relative sliding movement of said tube and said casing.

10. A washing device comprising a casing, a strainer disposed in said casing and forming a support for soap or other soluble material, a tube extending into said casing and through said strainer, said tube being slidably engaged with said casing and having one or more openings in its walls, means for connecting the outer end of said tube to a source of water, and a discharge hose having one end extending into said casing and forming a seat for the inner end of said tube.

11. A washing device comprising a casing, a strainer removably disposed in said casing and having a central opening surrounded by a flange, a tube extending into said casing and through said flange on said strainer, said tube being slidably engaged with said casing and having one or more openings in its walls, said tube also having a tapered inner end means for connecting the outer end of said tube to a source of water, and a discharge hose having one end extending into said casing and forming a seat for the inner end of said tube.

12. A washing device comprising a casing, a tube extending into said casing and having one or more openings in its walls, said tube being slidably engaged with said casing means for attaching the outer end of said tube to a source of water, a discharge hose having one end extending into said casing and forming a seat for the inner end of said tube, and a set collar secured to said tube for limiting the relative sliding movement of said casing and said tube.

13. A washing device comprising a casing having a removable cover provided with an opening, a grip washer carried by said cover and having a grip member received in said cover-opening, a tube extending through said grip member and having one or more openings in its walls, a discharge hose having one end extending into said casing and forming a seat for the lower end of said tube, and means for attaching the outer end of said tube to a source of water, said attaching means comprising a grip member having greater holding power than said cover grip member.

14. A washing device comprising a circular sheet metal casing having converging lower sides terminating in a discharge opening, a discharge hose having one end extending into said discharge opening and provided with an enlargement for securing the said hose in place therein, a cover for the top of said casing having a depending flange provided with projections forming handgrips, said casing and said cover having interfitting lugs for securing said cover removably to said casing and said cover having a circular central opening, a grip washer interposed between said cover and the upper edges of said casing and having a grip member provided with a groove fitting over the edges of said cover opening, a strainer disposed within said casing and forming a support for soap or other soluble material, a tube extending through said cover grip member and having one or more openings formed in its walls, a set

collar limiting the outward movement of said tube with respect to said cover, the lower end of said tube being tapered and adapted to seat in the end of said discharge hose or to withdraw from said hose to a distance limited by said set collar, and means for attaching the outer end of said tube to a source of water.

15. A washing device comprising a casing having reduced inlet and outlet ends, a cover for said inlet end, a bayonet joint connecting said cover and said casing, a hose extending into the end of said casing opposite to said cover, a tube extending through said cover and adapted to be seated in the end of said hose, said tubing having outlet openings in its walls, and a strainer surrounding the said tubing within the said casing.

16. A washing device comprising a casing adapted to contain soap or other soluble material and having an outlet, a tube extending into said casing and provided with means for connecting said tube to a source of water, means for conducting fluid from said casing, and means operable by relative lengthwise movement between said casing and said tube for selectively causing the water to flow directly through said tube and outlet, or for diverting a portion of the fluid away from said tube into the space surrounding the tube, and thereafter uniting said diverted water with the main stream.

17. A washing device comprising a casing, a tube extending into said casing, a friction joint connecting said tube slidably with said casing, and a friction member carried by the outer end of said tube and being adapted for connection to a source of water, said first-named friction joint being of less gripping power than said last-named friction member, whereby said casing may be moved lengthwise upon said tube without detaching said tube from said source of water.

In testimony whereof I, the said OSCAR H. WECKESSER, have hereunto set my hand.

OSCAR H. WECKESSER.

Witnesses:
JOHN F. WILL,
HENRY HOLZ.