Aug. 29, 1939. E. W. BULLARD 2,171,120

TIE WIRE APPARATUS

Filed May 21, 1938

Fig. 1.

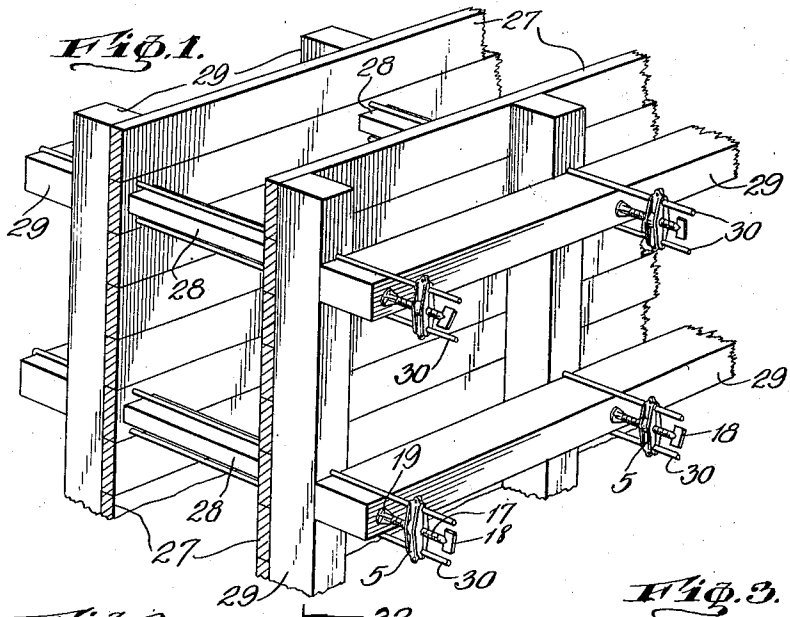

Fig. 2.

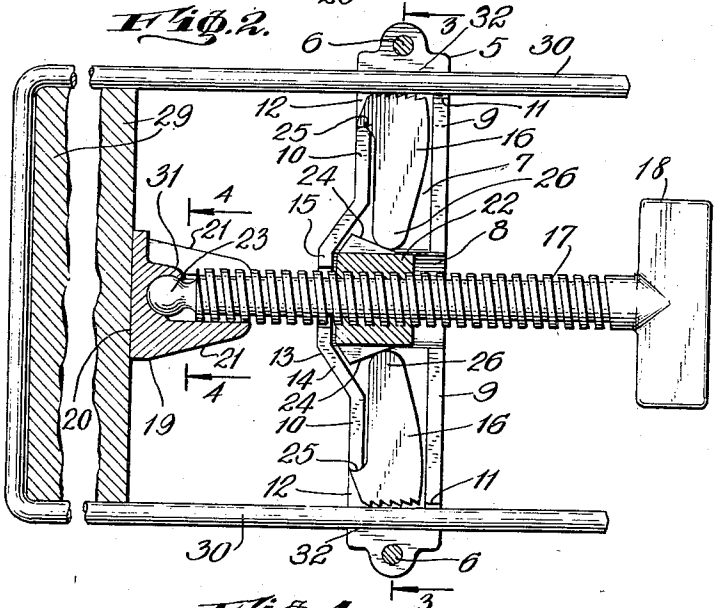

Fig. 3.

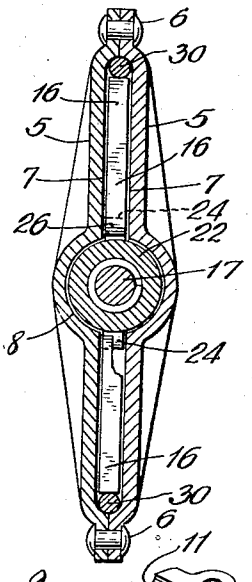

Fig. 5.

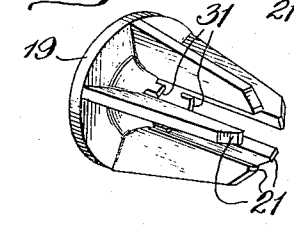

Fig. 4.

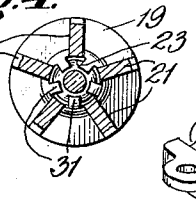

Fig. 6.

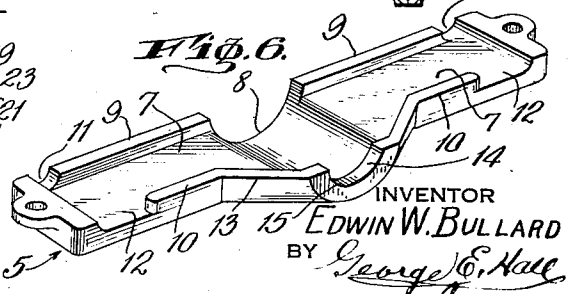

INVENTOR
EDWIN W. BULLARD
BY George E. Hall
ATTORNEY

Patented Aug. 29, 1939 2,171,120

UNITED STATES PATENT OFFICE

2,171,120

TIE WIRE APPARATUS

Edwin W. Bullard, Hamden, Conn.

Application May 21, 1938, Serial No. 209,280

8 Claims. (Cl. 254—67)

This invention relates to a new and improved tie wire apparatus for drawing and maintaining taut tie wires and the like.

The apparatus shown and described herein is in a form adapted to hold tie wires, associated with forms temporarily positioned to define the limits of the flow of concrete poured therebetween. Such tie wires are designed, among other things, to hold the several parts of the form in proper relative positions and from being sprung apart by the hydrostatic pressure against the inner faces thereof.

Heretofore it has been the practice to tighten these tie wires by twisting the ends together. Frequently the wires were thus flexed to the breaking point, and if not broken were materially weakened and broke under pressure.

In this new and improved apparatus the tie wires are drawn taut without twisting and are thus maintained until the forms are taken down. This desirable result is obtained by mechanism that is simple in its operation and requires much less time than under former methods.

To these, and other ends, this improved tie wire apparatus has certain details of constructions and combinations of parts, as will be hereinafter described and shown in the accompanying drawing, wherein like numerals of reference represent like parts in the several views.

Figure 1 is a perspective view of a set of forms arranged for the construction of a wall by pouring concrete therebetween, with the improved tie wire apparatus illustrated as connected with the tire wires thereof;

Figure 2 is an enlarged view, partly in section, of the tie wire apparatus;

Figure 3 is a transverse sectional view thereof upon line 3—3 of Figure 2;

Figure 4 is a view of the pressure plate, partly in section;

Figure 5 is a perspective view thereof; and

Figure 6 is a detail perspective view of one of the frame members.

This tie wire apparatus consists essentially of a frame composed of two members 5, secured together by any suitable means, such as rivets 6. Each member has recessed portions 7, a semicylindrical recess 8 and walls 9, 10 and 32, the walls 9 terminating distant from the walls 32 with the recesses 11—11 therebetween, and the walls 10 terminating in a similar manner with the recesses 12—12 therebetween and opposite the recesses 11.

Between its ends the walls 10 flare outwardly, forming the offset portion 13, with a wall portion 15 across the end of the recess 8, having a semicircular recess 14 therein, substantially concentric with the recess 8.

Movable endwise in the pocket formed between the walls of the recesses 8—8 is a nut 22, having cams 24 thereon, which project into the open space between the floors of the recessed portions 7 and hold the nut against rotation.

Within the frame, between the walls 9 and 10, and upon each side of the nut 22, is a cam lever 16. Each of these levers has a shoulder 25 thereon which fulcrums against an end of the wall 9, substantially as shown in Figure 2, with the adjacent portion projecting into a recess 12. The outer end of each lever is provided with a plurality of teeth and the opposite rounded end 26 is in the path of one of the cams 24.

Threaded through the nut 22 is a screw 17, having a finger piece 18 at one end to facilitate its manual rotation. Journaled on the opposite end, by a ball and socket joint, is a pressure plate 19. The pressure plate has a flat bearing surface 20 and a plurality of axial ribs 21, between which, adjacent to their lower ends, is the socket which receives the ball 23 on the screw 17. Between the ribs are the lugs 31 which are turned inwardly onto the ball 23 after being positioned in the socket and thereby prevent disengagement therefrom.

In practice, the side frames 27 of the form are separated by spacing bars 28 and reinforced by the braces 29 with the tie wires 30 positioned substantially as shown in Figure 1. Usually a single length of wire is used for the tie wire 30, arranged and associated with the forms, there being two leg or parallel portions. The free end of each of these portions projects laterally outside of one of the forms, and through the recesses or openings 11 and 12 in the frame upon opposite sides of the center thereof. The pressure plate 19 engages one of the braces when so positioned.

The first rotation of the screw 17 forces the nut 22 in the frame toward and against the walls 9, at the same time rocking the cam levers upon their fulcrums by reason of the engagement of the rounded ends of the cam levers with the cams 24 on the nut. This movement of the cam levers forces the teeth thereon into the tie wire, each of which is supported in the frame opposite the cam levers, by a wall 32, and are thus held securely against movement within the frame. The continued rotation of the screw increases the pull on the tie wires, drawing them taut and straightening out any kinks therein. The tie wires now remain taut until after the concrete has been

poured and has set sufficiently to remove the forms, after which the apparatus is removed by releasing the pressure by the cam levers upon the tie wires through manipulation of the screw. The frame is now removed. After this, the projecting portions of the tie wires are cut off at the desired place. If desired, such projecting portions may be cut off before the apparatus is removed and the wire ends then taken out of the frame.

By this apparatus the tie wires at the opposite sides of the frame are held under substantially equal tensions, and the pressure thereagainst increases as the pressure applied through the cams is increased.

Within the scope of the appended claims, changes and alterations may be made in the details and construction of the apparatus.

What is claimed is:

1. In an apparatus of the character described; a frame; a nut within the frame; levers within the frame, one upon each side of the nut; a member threaded through the nut, which when subjected to endwise pressure imparts a limited endwise movement to the nut within the frame and actuates said levers, whereby each lever holds a wire or the like projecting through a recess in the frame, which wires thereafter move with the frame as a unit during the continued application of said pressure.

2. In an apparatus of the character described; a frame; a nut within the frame having cams thereon; plural levers within the frame, one upon each side of the nut and in the path of said cams; a member threaded through the nut, which imparts a limited endwise movement to the nut within the frame when subjected to endwise pressure, and through the cams actuates said levers, whereby each lever holds a wire or the like projecting through the frame and against one wall thereof, which wires thereafter move with the frame as a unit during the continued application of said pressure; and a pressure plate movably mounted on said member.

3. In an apparatus of the character described; a frame; a nut within the frame having cams thereon; plural levers within the frame, one upon each side of the nut and in the path of said cams; a member threaded through the nut, which imparts a limited endwise movement to the nut within the frame when subjected to endwise pressure, and through the cams actuates said levers, whereby each lever holds a wire or the like projecting through the frame and against one wall thereof, which wires thereafter move with the frame as a unit during the continued application of said pressure; and a pressure plate, movably mounted on said member, having a flat outer face, a plurality of axial ribs projecting laterally therefrom and a plurality of lugs adjacent to the points of juncture of said ribs that are turned inwardly and complete a socket concentric therewith.

4. In an apparatus of the character described; a frame constructed of plural parts, each having substantially parallel walls, one with an offset portion; a nut in the frame having radially projecting cams thereon; plural cam levers, one upon each side of the nut and in the path of movement of one of the cams; and a member threaded through the nut, whereby endwise movement is imparted to the nut within the frame and a rocking movement to the levers, whereby the latter are projected outwardly against a wire or the like projecting through the frame.

5. In an apparatus of the character described; a frame, composed of plural parts, secured together, each of such parts having substantially parallel side walls, one of which has an offset portion and substantially parallel end walls, each of said side walls terminating distant from said end walls and thereby having a recess therebetween; a nut within the frame having cams thereon; plural levers within the frame, one upon each side of the nut and in the path of said cams; a member threaded through the nut, which imparts a limited endwise movement to the nut within the frame when subjected to endwise pressure, and through the cams actuates said levers, whereby each lever holds a wire or the like projecting through the frame and against one wall thereof, which wires thereafter move with the frame as a unit during the continued application of said pressure.

6. In combination with a tie wire or the like for forms or the like; means for drawing and maintaining the tie wire taut, comprising a frame member to receive the free ends of the tie wire; a pressure member; members upon each side of the pressure member that engage that portion of the tie wire within the frame member and force the same against a rigid wall during the continued operation of the pressure member.

7. In combination with a tie wire or the like for forms or the like; means for drawing and maintaining the tie wire taut, comprising a frame member to receive the free ends of the tie wire; a pressure member; members upon each side of the pressure member that engage that portion of the tie wire within the frame member and force the same against a rigid wall during the continued operation of the pressure member, such pressure member comprising a non-rotatable nut and a screw, the latter being held against axial movement by the forms.

8. In combination with a tie wire or the like, having two leg portions; means for drawing and maintaining the tie wire taut, wherein each of the leg portions is under substantially equal tension, comprising a frame member that receives both of said leg portions; a pressure member; a member upon each side of the pressure member that engages the said leg portions and forces the same against a rigid wall during the continued operation of the pressure member.

EDWIN W. BULLARD.