(No Model.)

F. T. MILLER.

COPYING MACHINE.

No. 590,727. Patented Sept. 28, 1897.

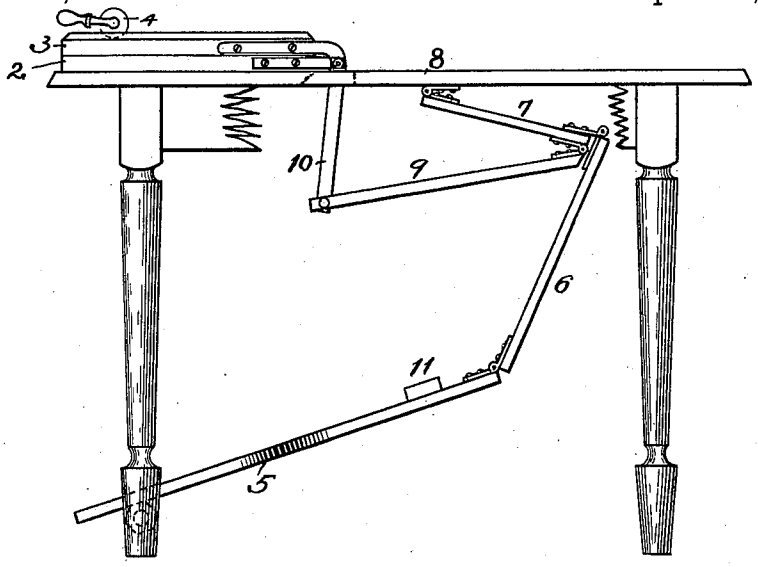

Fig. 1.

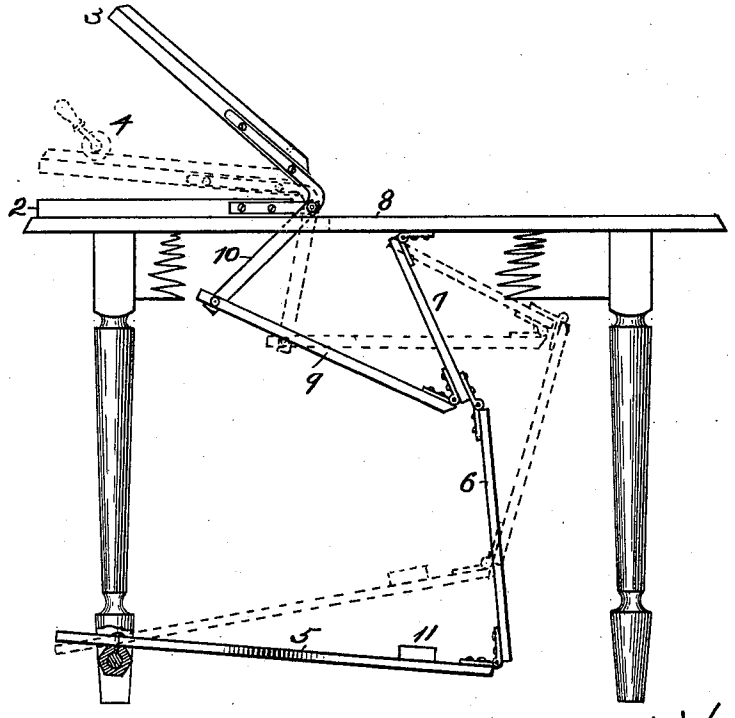

Fig. 2.

WITNESSES

Edward R. Wark.

Ellen B. Tomlinson.

INVENTOR

Franklin T. Miller,

by his attorney,

E. D. Bradwick.

THE NORRIS PETERS CO., PHOTO-LITHO., WASHINGTON, D. C.

UNITED STATES PATENT OFFICE.

FRANKLIN T. MILLER, OF NEWTON, MASSACHUSETTS.

COPYING-MACHINE.

SPECIFICATION forming part of Letters Patent No. 590,727, dated September 28, 1897.

Application filed November 24, 1896. Serial No. 613,243. (No model.)

To all whom it may concern:

Be it known that I, FRANKLIN T. MILLER, a citizen of the United States, residing at Newton, in the county of Middlesex, State of Massachusetts, have invented certain new and useful Improvements in Copying-Machines, of which the following is a specification.

My invention relates to devices for multiplying copies of written or printed matter. It is more especially intended to be applied to what is known as the "mimeograph," and is so shown and described herein, but it may readily be adapted to other analogous copying or duplicating machines—such as the "neostyle," so called, and others—as will be apparent to those who are familiar with such machines.

In the accompanying drawings is shown a mimeograph with a preferred form of my invention applied thereto.

Figure 1 is a side elevation of the complete device with its parts in position for a copy to be printed. Fig. 2 is a side elevation of the parts after they have been moved from the position shown in Fig. 1 nearly to their other limiting position. In the same figure are shown in dotted lines the parts in what I call the "balanced" position, which will be hereinafter explained.

The numerals 2 and 3 in the drawings represent, respectively, the base and the hinged top frame of an ordinary mimeograph. In using the apparatus (without my improvements applied thereto) one or more blanks are placed on the base 2, the hinged frame 3, which carries the stencil, is swung down into contact with the top blank—*i. e.*, into the position shown in Fig. 1—and the inked roller 4 is then passed over the top of the stencil, a copy of the matter on the stencil being thereby printed on the top blank. The roller 4 is then removed, the frame 3 swung up and back, and the printed sheet removed, after which the foregoing process may be repeated.

In most of the machines of this class with which I am familiar all the steps just described have to be performed by hand; and it is the object of my present invention to provide for the independent motion of the hinged frame 3 in such manner as to leave both hands of the operator free, one to operate the roller 4 and the other to remove the sheets as fast as printed, thus greatly increasing the ease and speed with which the process may be performed, and, further, to provide an operating mechanism for this purpose which shall act to prevent the sudden arresting of the frame at either limit of its motion, because the delicate waxed paper sheet which in the mimeograph forms the stencil would soon be injured and rendered useless by such sudden stops.

The form of my invention shown in the drawings accomplishes the objects above described, as will presently be explained.

I prefer to operate the frame 3 by means of a treadle 5, acting upon said frame through a species of toggle-linkage comprising rods 6 and 7, pivoted to each other at their adjacent ends, and at their other ends to the treadle and the table 8 or other support, respectively, and a third rod 9, pivoted at one end to one of the rods 6 and 7 and connected at its other end to the frame 3 in such manner as to rock the same when operated on its pivot—as, for instance, by being pivoted, as shown, to an arm 10, rigidly secured to said frame and passing through a slot in the table 8. The pivot on which the frame 3 turns is preferably set a little below and back of the intersection of the plane of the stencil with the plane of the bed-plate in order to decrease the tendency of one edge of the stencil to come in contact with the blank before the opposite edge reaches it and thus blur the copy. As thus constructed the frame 3 is raised and lowered by the action of the foot of the operator in an obvious manner, leaving both hands free, one to remove the copies as fast as printed and the other to operate the roller 4. It will be seen that the roller need not be removed from the top of the stencil at all, except for the purpose of inking it. The hand which holds the roller will move up and down with the frame 3, and the movements of said frame can be perfectly controlled by the hand through the roller and foot of the operator working in conjunction with each other.

The device when constructed and operated as above described can be used with a remarkable saving of time and labor, with much

greater cleanliness than where the frame 3 has to be raised and lowered by hand, and with a greater uniformity and better quality in the resulting work.

The parts above described should be so proportioned that when the frame 3 is being swung upward the rods 6 and 7 will approach alinement with each other, in consequence of which the force tending to lift the frame 3 will be much diminished as the treadle approaches the limit of its downward movement and will become practically nothing at such limit, whence it will result that nothing in the operating mechanism or in the action thereof can cause the frame to stop suddenly after it has been lifted from the base 2, no matter how much force may be applied to the treadle, but its own momentum will continue its motion and will thus take up the surplus force. The same result may be contributed to in a greater or less degree by causing the effective leverage of the rod 9 on the arm 10 to grow less and less as the frame 3 rises. This latter effect depends largely on the point at which the rod 9 is pivoted to the rod 6 or 7, and is increased as said pivot is moved upward on said rod 7.

In the manner just described the liability of injury to the stencil by reason of a sudden stop after being swung upward is obviated. A similar liability at the end of its downward swing may be avoided by causing the parts of the device, when no force at all is exerted on the treadle, to balance in an intermediate position of stable equilibrium, as indicated in dotted lines in Fig. 2. This balance may be adjusted, if necessary, by a weight 11, attached to the treadle. When so balanced, obviously there will be a retarding force after the frame 3 has passed the position of equilibrium in its downward swing, tending to check the motion of said frame and thus keep it from striking violently on the base 2. Thus the action of my operating mechanism in its preferred form is such that the velocity of the frame as it approaches the extreme positions of its movement is gradually diminished, regardless of its velocity between those extreme positions, so that any sudden stopping of the frame, and consequent injury to the stencil, is rendered impossible.

I do not consider my invention to be limited to the precise arrangement of parts shown and described, as it may obviously be modified in many particulars. For example, the rods 9 and the arm 10 may be omitted and the rod 7 connected rigidly to the frame 3.

I claim as my invention—

1. In a duplicating-machine, a swinging frame, a treadle, and mechanism connecting said treadle with the frame for raising the latter by depressing the treadle, said mechanism acting to continuously diminish the lifting force transmitted from the treadle to the frame as said treadle is depressed, for the purpose set forth.

2. In a duplicating-machine, a swinging frame, arranged to fall by its own weight, in combination with mechanism for raising the same, said parts being counterbalanced in such manner that the frame has between its extreme positions a balanced position of stable equilibrium in which it is partly raised, for the purpose set forth.

3. In a duplicating-machine, in combination with a swinging frame and with a treadle, the rods 6 and 7 pivoted to each other, and to the treadle and to a fixed support respectively, and the rod 9 pivoted to one of the aforesaid rods and connected to the hinged frame to operate the same, said parts being so proportioned that when the treadle is depressed the rods 6 and 7 are substantially in alinement with each other, all substantially as described.

4. In a duplicating-machine, in combination, a swinging frame, the toggle-linkage comprising the rods 6, 7 and 9, and a treadle, said parts being connected together substantially as described, and counterbalanced in such manner that said frame has a balanced position of stable equilibrium in which it is partly raised, all substantially as described.

5. In a duplicating-machine, a swinging frame, a treadle, and mechanism connecting said treadle with the frame for operating the latter, said mechanism acting positively in both directions, and also acting to gradually diminish the velocity of the frame as said frame approaches the limit of its upward movement, for the purpose set forth.

6. In a duplicating-machine, in combination, a swinging frame, a treadle, and mechanism connecting said treadle with the frame for operating the latter, and acting to gradually diminish the velocity of the frame as it approaches the extreme positions of its movement, for the purpose set forth.

In testimony whereof I have hereunto subscribed my name this 16th day of November, A. D. 1896.

FRANKLIN T. MILLER.

Witnesses:
MYRON L. CROWE,
EVERETT D. CHADWICK.