(No Model.)

R. D. GATES.

STONE CRUSHER AND PULVERIZER.

No. 456,304. Patented July 21, 1891.

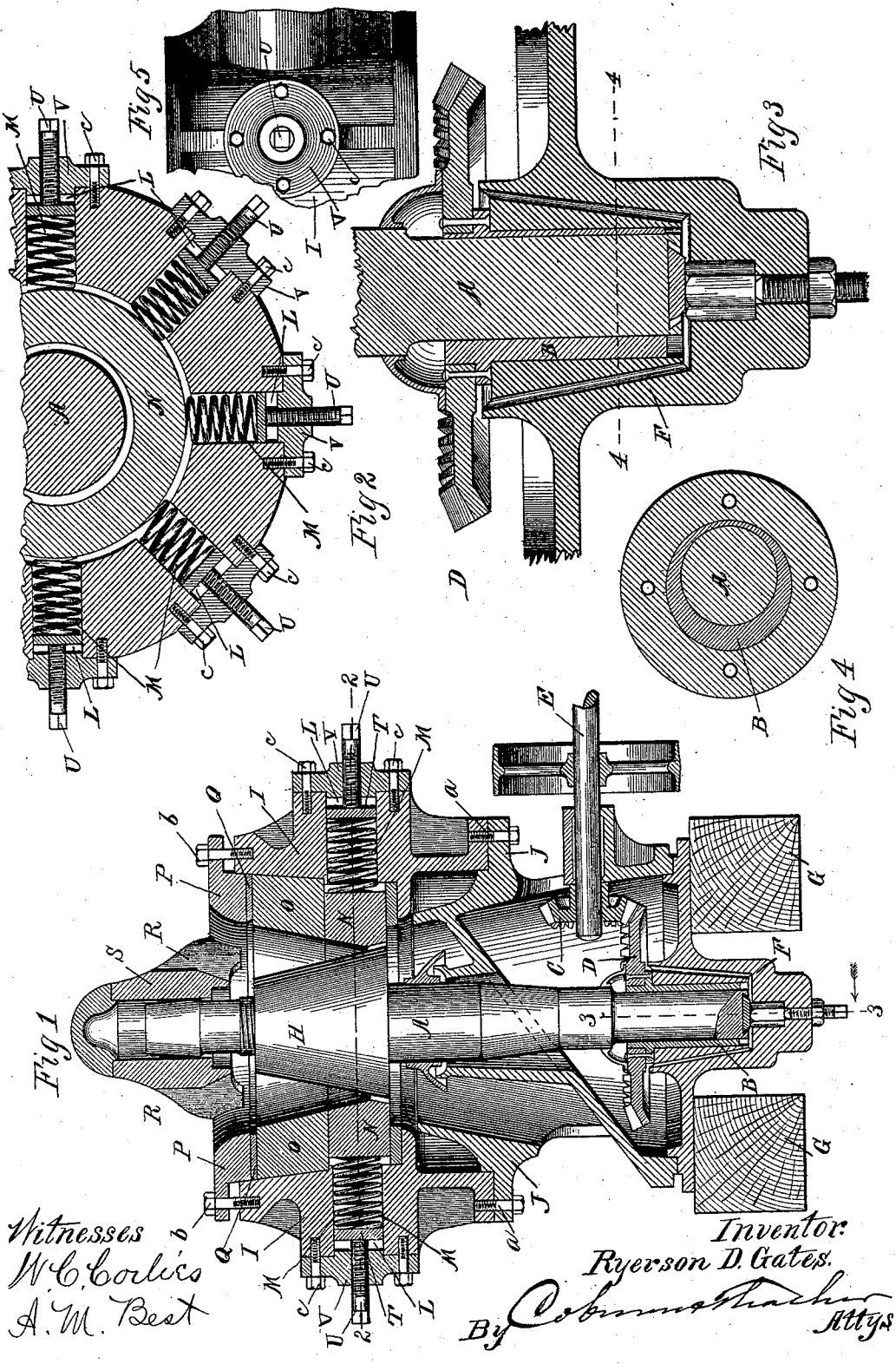

THE NORRIS PETERS CO., PHOTO-LITHO., WASHINGTON, D. C.

UNITED STATES PATENT OFFICE.

RYERSON D. GATES, OF CHICAGO, ILLINOIS.

STONE CRUSHER AND PULVERIZER.

SPECIFICATION forming part of Letters Patent No. 456,304, dated July 21, 1891.

Application filed January 22, 1891. Serial No. 378,673. (No model.)

To all whom it may concern:

Be it known that I, RYERSON D. GATES, a citizen of the United States, residing at Chicago, in the county of Cook and State of Illinois, have invented a certain new and useful Improvement in Stone Crushers and Pulverizers, which is fully set forth in the following specification, reference being had to the accompanying drawings, in which—

Figure 1 represents a vertical sectional view of the entire machine; Fig. 2, a transverse sectional view of a portion of the machine, taken on the line 2 2, Fig. 1; Fig. 3, a vertical sectional view of the lower portion of the machine, taken on the line 3 3, Fig. 1; Fig. 4, a transverse sectional view taken on the line 4 4, Fig. 2; and Fig. 5, a side view of a portion of the case, showing one of the cap-plates V I detached from the machine.

The object of my invention is to make a stone crusher and pulverizer in which the crushing portion of the conical die surrounding the stone-breaking head is stationary, while the pulverizing portion is movable, so that as the stone is broken or crushed and falls down it is not allowed to escape until finely pulverized. In my patent of June 16, 1885, for a pulverizing-machine the entire conical die was allowed to move or yield, and I found that in that machine that part of the conical die where the stone was broken or crushed would move away from the conical crushing-head that was carried by the gyrating shaft, which objection I overcome by dividing the conical die, making the upper portion of it stationary, while the lower portion only is allowed to yield, so that I am enabled to break stone by impinging it against the stationary part of the conical die and pulverize it by impinging the broken pieces against the movable part of the conical die. In this construction I am enabled to break stone and pulverize it finely before it is delivered from the machine.

In the accompanying drawings, A represents the gyrating shaft with an eccentric bearing-box B at its lower end, which eccentric bearing-box is rotated by means of the cog-wheels C and D, having power communicated to them by the shaft E. The eccentric bearing-box B is held in the base of the machine F, which is supported upon the timbers G. The gyrating shaft A carries the crushing head or cone H. There is a circular outer case I, which extends entirely around the upper portion of the machine and rests upon the cylindrical lower portion J of the machine and is secured thereto by bolts *a*. There are several holes L in the outer casing I of the machine, in which are placed the coil-springs M, which bear against the conical pulverizing-die N and allow it to yield as the crushing cone or head H is gyrated, the cylindrical pulverizing-die being smaller than the interior of the outer case I in which it is placed.

O is a stationary conical die firmly secured in the casing I immediately above the pulverizing-die N, so that the stone, when admitted into the top of the machine, is broken and crushed against the stationary die O by the upper portion of the cone or breaking-head H, and the pieces immediately fall down between the crushing head or cone H and the movable die N, where they are pulverized very finely before being discharged into the machine below.

P is the top piece of the machine, which is securely bolted to the case I by the bolts *b*.

Q is a thin piece of wood or other material between the top P and the cylindrical stationary die O. R are parts of the casting P and carry the bearing-box S for the top bearing of the gyrating shaft A. This bearing-box is constructed in any of the well-known ways for constructing the gyrating stone-breakers with the gyrating shaft gyrated at its lower end.

I also show in my drawings the construction of the diaphragm for delivering the pulverized stone at one side of the machine and the dust-protectors to prevent the dust of pulverized stone from reaching the bearing and gearing at the bottom of the machine and also the oil-ducts for oiling the lower bearing and the step-blocks, and adjustable set-screw device for adjusting the gyrating shaft, all of which may be constructed in any of the well-known ways of constructing the gyrating type of stone-breaking machines.

The springs M have a following plate T,

with screw-bolts U, by which the pressure of the springs against the pulverizing-die N is regulated.

V are cap-plates covering the holes L in the case I, and are firmly secured to the case by bolts *c*. These cap-plates also have a screw-threaded hole to receive the bolts U, as clearly shown in Fig. 1. I find by this construction of the machine that I can crush the stone and pulverize it. The crushing of the stone in the upper part of the machine where the cylindrical die is stationary continues, while the pulverizing-die moves with the crushing cone or head, which is securely fastened to the gyrating shaft.

In my machine patented June 16, 1885, the whole die was made movable, which interfered with the crushing of the stone, while in this machine, which is an improvement on that patent, the crushing is continued, while the pulverizing is accomplished by means of making a separate pulverizing-die placed below the crushing-die. I am aware that machines of this type, constructed with the conical die wholly stationary, are old; but in such machines, as the crushing-head of a cone is gyrated, the opening at the bottom of the die must necessarily be as large as the throw of the breaking-head, which leaves quite a wide space for the crushed stone to escape, and it is impossible to finely pulverize stone in such machines.

I am aware that in my patent of June 16, 1885, the entire die was made movable and was secured by springs in the outer casing of the machine substantially the same as I secure the pulverizing-die in this application; but in that patent the crushing of the stone was interfered with on account of the whole die moving with the gyrating crushing head or cone. In this machine I am enabled to carry on the crushing of the stone and pulverize it, thereby accomplishing the desirable result, which, so far as I know, has not been accomplished before.

Having fully described my invention, what I claim as new, and desire to secure by Letters Patent, is—

In a stone crusher and pulverizer, the movable pulverizing-die N, stationary crushing-die O, and breaking head or cone H, substantially as and for the purposes specified.

RYERSON D. GATES.

Witnesses:
L. L. COBURN,
ALOYSIA HELMICH.