Jan. 12, 1960 T. A. CHUBB 2,921,217

COPPER-AMINE-COMPLEX PHOTON COUNTER

Filed May 16, 1958

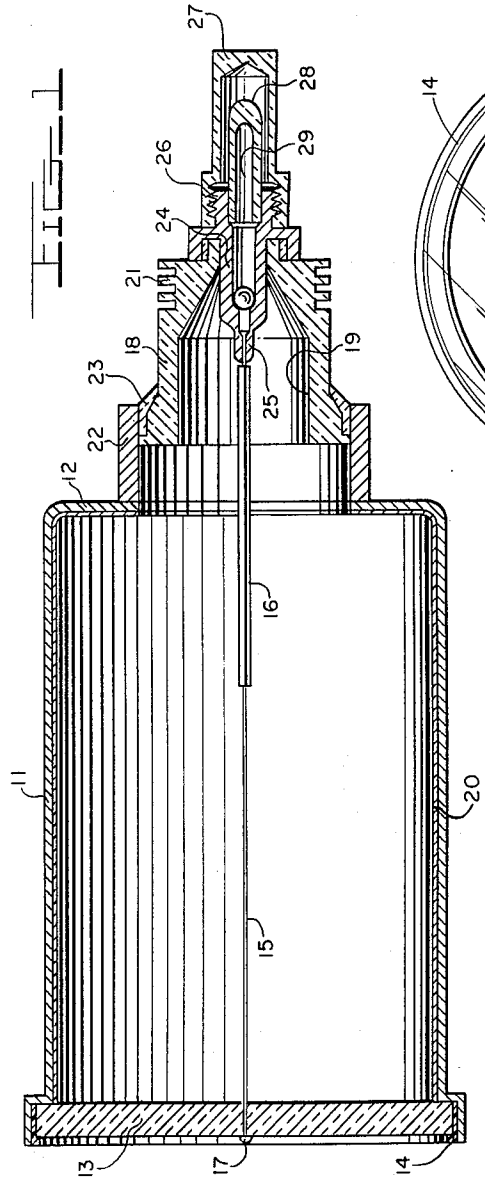

FIG. 1

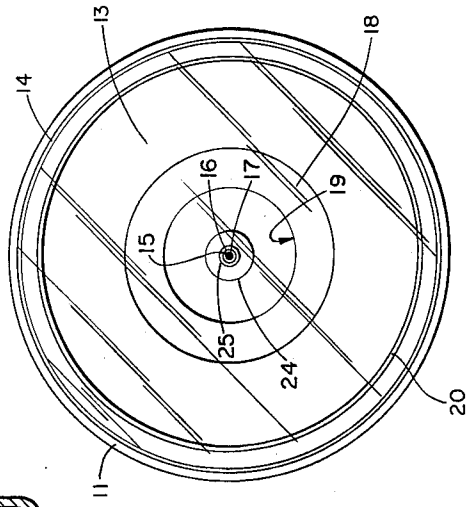

FIG. 2

INVENTOR
TALBOT A. CHUBB

BY Richard C. Reed ATTORNEYS

United States Patent Office 2,921,217 Patented Jan. 12, 1960

2,921,217

COPPER-AMINE-COMPLEX PHOTON COUNTER

Talbot A. Chubb, Forest Heights, Md.

Application May 16, 1958, Serial No. 735,913

12 Claims. (Cl. 313—100)

(Granted under Title 35, U.S. Code (1952), sec. 266)

The invention described herein may be manufactured and used by or for the Government of the United States of America for governmental purposes without the payment of any royalties thereon or therefor.

This invention relates to a photon counter and in particular to a photon counter designed to operate effectively in the near ultra-violet and visible regions of the spectrum.

A photon counter closely resembles the Geiger counter in all essential structural elements except for an additional feature, i.e., the photon counter is provided with a transmitting window through which the radiation beam to be measured passes into the tube. In the operation of the photon counter the gaseous filling plays an important role: it consists of an inert gas such as argon, neon or helium and contains a small amount of a polyatomic organic vapor such as ethyl alcohol, amyl acetate, methylene bromide, acetone, xylene and many others. The organic molecule in this gaseous admixture modifies the discharge mechanism in such a way that the tube recovers more readily from its conducting state.

Briefly stated, radiation entering the device produces gas ionizations by causing emission of electrons from the cathode surface. Ions and electrons drifting through the inert gas experience numerous collisions with gas molecules; a chain of ionizations is set up within the inert gas that transfer the electrons rapidly toward the anode. The chain of ionizations are finally interrupted by positive ions near the anode where the positive ions form in effect an electrostatic shield. The significance of the organic molecule is revealed when positive ions migrating toward the cathode are neutralized by drawing electrons out of the cathode surface. If positive inert gas ions, alone, are being neutralized, the excess energy of the neutralized molecule is sufficient to be radiated as ultraviolet light resulting in electron missions at the cathode and a new chain of ionizations. A few millimeters Hg of an organic vapor—ethyl alcohol, for instance—is sufficient to acquire ionization charge from the inert gas ions by the process of charge transfer. The organic vapor ions dissociate on neutralization instead of producing radiation energy which causes new electron discharges in the counter. In this manner the organic vapor quenches the discharge.

A particular difficulty encountered with the operation of a photon tube is that organic quenching vapors exhibit symptoms of aging with time and after sustained counts. Through constant ionizations of their molecules, these vapors are slowly undergoing decomposition and alteration of their chemical structures. The gaseous filling becomes contaminated with decompositon products which alter the optimum gaseous mixture and consequently decrease the quenching properties of the mixture. Eventually most of the organic molecules are broken down to fragments that cannot combine and cannot function as a quenching vapor. Decomposition products moreover are deposited on the cathode surface and form dielectric coatings that interfere with photoemission at the cathode.

Apart from the failure of the counter to function altogether, a tube cannot be restored to its original condition by merely refilling the tube with a fresh supply of gaseous mixture because the tube is now coated with dielectric contaminants that need to be removed.

Photon counters have been developed and successfully operated in the region below 3000 Angstroms, but in the spectral region between 3000 to 5000 Angstroms it has not been possible to obtain stable metal emitting surfaces with useful sensitivities. This is mainly due to the fact that some surfaces which are highly photosensitive in a vacuum, such as the alkali metals, become contaminated and desensitized by contact with the gaseous filling in a counter tube.

It is therefore an object of this invention to provide a novel photon counter wihch is capable of passing long number of counts without a noticeable deterioration in the quenching vapor.

Another object is to provide a photon counter which is extremely stable with respect to time and which possesses a high sensitivity to near ultraviolet and visible light.

A further object of this invention resides in the provision of a photon counter which has a sensitized cathode surface formed in the reaction of the cathode metal with a chemically active gas or vapor and in which said chemically active gas or vapor is the quenching medium.

A still further object of this invention resides in a novel photon counter which is capable of long continuous operation without loss of its efficiency or in its operating voltage.

A still further object of this invention provides for a novel photon tube which is unusually sensitive in the spectral region between 3000 and 4000 Angstroms.

Other objects of the present invention will become apparent from the following detailed description when considered with the drawings in which:

Fig. 1 is a longitudinal section through the tube, and

Fig. 2 is a cross sectional view of the photon counter shown in Fig. 1.

In accordance with the general teachings of the present invention, a photon counter tube with a copper cathode has improved sensitivity in the ultraviolet and in the visible region of the spectrum as compared with copper cathode counters heretofore available. This improved sensitivity to longer wavelengths is achieved by introducing a chemically active gas into the tube space, a portion of the gas reacting chemically with the cathode metal and becoming bound to the metal as a novel cathode surface, while the remaining portion of the gas remains in the tube space to serve as the quenching agent in the operation of the photon tube. The chemically active gas is an organic amine, preferably methylamine gas, which reacts with and sensitizes the copper cathode, while an additional amount of the methylamine gas serves as the quenching agent in the gaseous filling of the tube.

The photon counter tube shown by illustration in Figs. 1 and 2 comprises a cathode cylinder **11** made of copper, wherein the metal extends to the rear of the cylinder to provide an annular ring portion **12**. The front end of the cylinder is arranged with a window fitted with a quartz plate **13** which is capable of transmitting light in the near ultraviolet and in the visible region of the spectrum. The quartz plate is cemented to the copper cylinder with an epoxy resin cement **14** or any other suitable means.

An anode wire **15**, which may be a tungsten wire 0.005 inch in diameter, is mounted along the axis of the copper cylinder and is partially enclosed in a ceramic capillary tube **16** so that the exposed wire is found only at the anterior portion of the counter, i.e., the portion nearer to the quartz window. The anode wire is attached to the quartz window by passing the wire through a small hole

in the center of the quartz plate and then sealing the quartz-to-metal contact with a dab of epoxy resin 17 on the exterior surface of the quartz window. The other end of the anode wire is supported by an anode assembly which consists of a ceramic insulator 18, the interior surface 19 confines the counter tube space while the exterior, rear portion thereof is arranged with annular convolutions 21. The metal support ring 22, which is made of chrome-iron, or any other suitable metal, is soldered to the cathode cylinder and the ceramic insulator 18 is connected thereto through a fused powdered glass seal 23. A chrome-iron lug 24, which may be made of any other suitable metal, passes through the ceramic insulator and provides the terminal 25 to which the anode wire is connected, while the exposed portion is threaded at 26 in order to provide a means for attaching a cap 27 for protection of the glass seal 28. Glass tube outlet 29 provides a means for evacuating the tube and for introducing a gaseous mixture therein; the glass tube outlet is subsequently sealed, as shown at 28. All glass-to-metal connections are made with fused powdered glass seals.

In the preferred embodiment of this invention, after the tube is assembled and prior to sealing, a gaseous admixture of 9 millimeters of methylamine gas and 400 millimeters of neon gas is introduced into the counter space. The tube is allowed to remain at room temperature for a sufficient time for the methylamine gas to react or complex with the copper metal. The copper cathode surface develops a bluish tint as the reaction progresses and the initial pressure of the gas filling drops as the partial pressure of the methylamine gas is reduced in the gaseous pressure. It has also been determined that during the reaction period the operating voltage of the tube drops from 1200 volts to about 900 volts. In the drawing the reaction of methylamine gas with the copper is shown on the inner surface of the copper cylinder as a coating 20, which is exaggerated for the purpose of illustration.

The novel cathode is chemically composed of an organic type amine, reacted with or coupled with the copper, forming a copper-amine-complex which may be ionic in structure or of the Werner type coordinate complexes. It has also been found that the diamines, especially ethylenediamine, reacts with the copper surface to form a complex that is suitable for the purposes of this invention. For instance, about 5 millimeters Hg of ethylenediamine and about 500 millimeters Hg of helium introduced in the photon counter has been found to give satisfactory performance in accordance with the requirement of this invention.

The novel treatment of the copper cathode as described herein results in a sensitized cathode surface which shifts its ordinary band of sensitivity from the spectral range common to copper metal to a region of longer wavelengths. This shift in sensitivity is more than 1000 Angstroms in the direction of visible light. Copper metal ordinarily is not so sensitive to wavelengths in the near ultraviolet and in the visible light, in fact, such sensitivity is usually obtained from alkali metal coating on metal cathodes. The copper amine complex sensitizes the copper cathode so that the counter is now usually sensitive to near ultraviolet radiation in the region between 3000 and 4000 Angstroms.

The photon counter constructed in accordance with this invention has an operable range from about 2200 to about 4400 Angstroms. The copper amine complex has a sensitivity that extends throughout the near ultraviolet and also into the visible region of the spectrum. As a result of this invention it is possible to employ a copper cathode which has negligible photosensitivity in the visible portion of the spectrum and to change it into a surface with high photosensitivity to visible light.

As a result of a sensitized copper amine complex cathode surface and the methylamine—neon gas admixture the tube is considerably stabilized. It is capable of a long continuous operation without loss of its efficiency and without change in the operating voltage. It is unaffected even after 10^9 counts. As previously explained, it is unusual for an organic quenching agent to be able to withstand that many counts without a noticeable reduction in the operational characteristics of the tube. The threshold voltage remains very nearly constant even after four months of sustained counting.

Theoretically, it may be inferred that the organic amine molecule decomposes very slowly into products that are not deleterious to a cathode surface. The ability of this quenching gas to maintain a very nearly constant partial pressure in the gaseous filling may be due to a replenishment of the amine by a slow decomposition of the copper amine complex from the cathode surface. As the quenching vapor is slowly decomposed, the amine is released slowly from the complex to become a fresh supply of quenching gas. This is indicative that in the equilibrium between the quenching gas and the copper amine complex, a reduction in the quenching gas shifts the equilibrium in favor of further release of amine vapor from the copper-amine complex surface. In this way the tube is capable of a sustained operation because part of the quenching gas is held in reserve and becomes available to the tube only as it is needed in the counting process.

While it has been determined that in the preferred embodiment of the gas admixture of 9 mm. of methylamine and 400 mm. of neon resulted in a satisfactory operation of the tube described herein, it is also within the scope of the invention to provide an organic amine of any desired chemical structure and in any proportion relative to the inert gas. The amine is preferrably present in an amount from about 5 millimeters to 25 millimeters although other amounts which maintain the quenching function may also be used. The inert gas may vary over a wide limit, the preferred amounts being from about 100 millimeters to about 800 millimeters. The copper cathode may initially be treated with an amine vapor to receive a substantial surface treatment prior to the introduction of the gaseous filling in the tube. As a general rule the threshold voltage increases with the quantity of the gaseous filling in the tube, and this is especially the case with the organic gas, so that operating voltage limitations ultimately determine the amount of amine that can be introduced into the tube. It is equally true that the greater the portion of amine that can be inserted in the tube filling, with a normal operating voltage, the greater is the expected lifetime of the tube.

The essential advantages derived from the copper-amine-complex surface and the inclusion of amine vapor in the gaseous filling of the novel photon counter are (1) a sensitized copper cathode surface with the highest response in the spectral region between 3000 to 4000 Angstroms (2) the ability of the counter to pass a great number of counts without any noticeable deterioration in the quenching vapor, and (3) a photon counter which does not suffer loss of its efficiency or in operating voltage because of prolonged usage.

It should be understood, of course, that the foregoing disclosure relates to a preferred embodiment of the invention and that numerous modifications or alterations may be made therein without departing from the spirit and scope of the invention.

What is claimed is:

1. A photon counter tube comprising a metal envelope which serves as the cathode, a coaxial anode and a gaseous filling within said envelope, said gaseous filling containing an inert gas and a chemically active gas wherein a portion of said chemically active gas reacts with the metal cathode to form a cathode surface that is sensitive in the spectral region of near ultraviolet and in the visible light, and a window in said envelope which transmits said radiation.

2. A photon counter tube comprising a copper envelope which serves as the cathode, a coaxial anode and a gaseous filling within said envelope, said gaseous filling

containing a chemically active gas and an inert gas wherein a portion of said chemically active gas reacts with the copper cathode to form a copper cathode surface that is sensitive in the spectral region of near ultraviolet and in the visible light, and a window in said envelope which transmits said radiation.

3. A photon counter tube as claimed in claim 2 in which the sensitized cathode surface is a Werner type complex.

4. A photon counter tube comprising a copper envelope which serves as the cathode, a coaxial anode and a gaseous filling within said envelope, said gaseous filling containing an inert gas and an amine wherein a portion of said amine reacts with the copper cathode to form a copper-amine-complex as a cathode surface that is sensitive in the spectral region of near ultraviolet and in the blue range of visible light, and a window in said envelope which transmits said radiation.

5. A photon counter tube as claimed in claim 4 in which the amine is methylamine.

6. A photon counter tube as claimed in claim 4 in which the amine is ethylenediamine.

7. A photon counter tube comprising a cylindrical copper envelope as the cathode, a coaxial anode and a gaseous filling within said envelope, said gaseous filling containing neon gas and methylamine wherein a portion of the methylamine reacts with the copper cathode to form a copper-amine-complex as a cathode surface that is sensitive in the spectral region of near ultraviolet and in the blue range of the visible light, and a window in said envelope which transmits said radiation.

8. A photon counter tube as claimed in claim 1 in which a portion of the chemically active gas reacts with the metal envelope wherein the reacted metal surface acts as a reservoir of quenching agent to replace the quenching agent in the tube as said quenching agent in the tube is consumed during the operation of the photon counter.

9. A photon counter tube comprising a copper envelope which serves as the cathode, a coaxial anode and a gaseous filling within said envelope, said gaeous filling

containing an inert gas and an organic amine wherein a portion of said organic amine reacts with the copper envelope to form a copper-amine-complex, said copper-amine-complex acts as a reservoir to replace the organic amine in the gaseous filling as said organic amine is consumed during the operation of the photon counter.

10. A photon counter tube which comprises a copper cathode forming a metal envelope, an anode coaxially disposed within said envelope, a gaseous admixture within said envelope, said gaseous admixture comprising methylamine and neon, said methylamine reacting with said cathode surface to form a sensitized surface operable in a range between about 2200 Angstroms and about 4400 Angstroms.

11. A photon counter tube comprising a copper cathode which forms a metal envelope, an anode coaxially disposed within said cathode, a gas filling within said envelope, said gaseous filling comprising from about 5 to 25 millimeters of methylamine and about 100 to 800 millimeters of neon, said methylamine reacting with said cathode surface to form a sensitized surface operable in a range between about 2200 Angstroms to about 4400 Angstroms.

12. A photon counter tube comprising a cathode which forms a metal envelope, an anode coaxially disposed within said cathode, a gas filling within said envelope, said gaseous filling comprising from about 5 to 25 millimeters of ethylenediamine and about 100 to 800 millimeters of argon, said ethylenediamine reacting with said cathode surface to form a sensitized surface operable in a range between about 2200 Angstroms to about 4400 Angstroms.

References Cited in the file of this patent

UNITED STATES PATENTS

1,758,710	Marshall	May 13, 1930
2,712,088	Whitman	June 28, 1955
2,715,195	Friedman	Aug. 9, 1955
2,765,418	Weisz	Oct. 2, 1956
2,824,991	Hendee et al.	Feb. 25, 1958