July 23, 1929. G. W. ELMEN 1,722,079

HEAT TREATING METALLIC CONDUCTORS

Filed Nov. 20, 1922

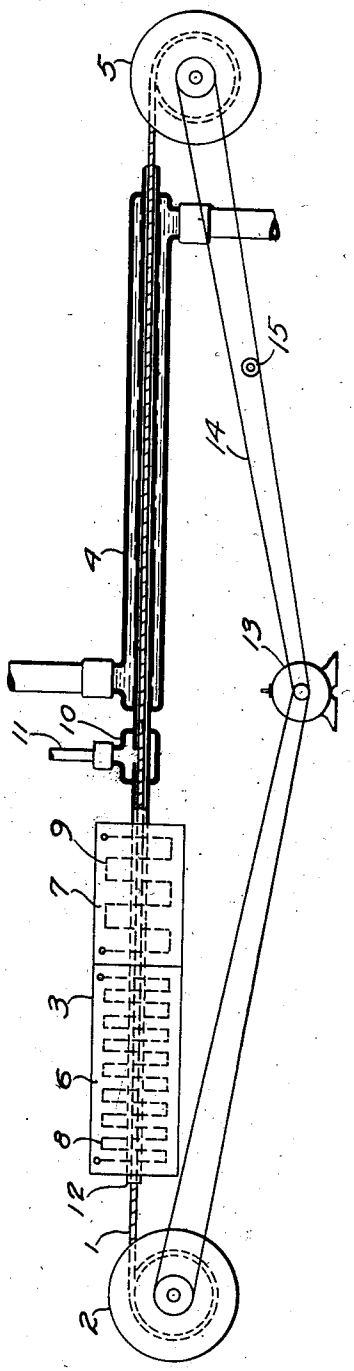

Inventor:
Gustaf W. Elmen
by Chas. Sprague, Atty.

Patented July 23, 1929. 1,722,079

UNITED STATES PATENT OFFICE.

GUSTAF W. ELMEN, OF LEONIA, NEW JERSEY, ASSIGNOR TO WESTERN ELECTRIC COMPANY, INCORPORATED, OF NEW YORK, N. Y., A CORPORATION OF NEW YORK.

HEAT TREATING METALLIC CONDUCTORS.

Application filed November 20, 1922. Serial No. 602,287.

This invention relates to the heat treatment of metals and more particularly to heat treating a signaling conductor inductively loaded with magnetic alloy.

An object of the invention is to provide suitable heating means for giving a moving metallic charge a desired heat treatment, this charge, in a narrower aspect of the invention, being an electric conductor in strand form.

Another object of the invention is to provide means for passing a conductor continuously through a furnace, without having its length or form varied by the forces acting upon it.

Investigations have recently been in progress looking toward the improvement of submarine telegraph cables. As a result of these researches it has been found that the speed of signaling over long submarine cables can be greatly increased by inductively loading the cable conductor with wire or tape of a certain nickel-iron alloy applied as a spiral wrapping, the wrapped conductor being given a certain heat treatment in order to increase the permeability of the loading material. The preferred method of applying heat treatment to the loaded conductor is to pass it slowly through a furnace and then through a cooling chamber. The alloy should be first brought to a temperature of about 850° or 900° C. and then allowed to remain at that temperature for a definite period, which appears to be necessary to insure a uniform or proper molecular structure, after which it should be cooled slowly through the transition temperature, which is from 500° to 600° C. depending upon the composition, and then further cooled at a rate between that necessary to anneal and rates which would set up mechanical stresses in the material when cold.

For a complete description of the alloy mentioned herein; the method of preparing it, its use as an inductive loading material and the manner of applying it to the conductor to be loaded, reference is made to the following United States patents, G. W. Elmen, 1,586,884 and 1,586,887 and O. E. Buckley 1,586,874 and 1,586,875, all granted on June 1, 1926.

As the sections of cable to be treated are necessarily so long and heavy that it would be very difficult to obtain a uniform heat treatment by applying heat simultaneously to all portions of them, either coiled or uncoiled, a method of applying a heat treatment by continuously passing the taped conductor through a furnace and a cooling chamber has been developed. This method is described in the above mentioned patents of G. W. Elmen and O. E. Buckley. It has been found, however, that the furnaces described in those applications do not apply heat to the moving conductor in a manner best suited for commercial operation. According to the present invention a conductor is passed through two or more adjacent furnaces or furnace sections, the first of which is maintained at a higher temperature than the second. It is desired to bring the alloy to a temperature considerably higher than the transition temperature and to maintain it there for a definite period, which appears to be the time necessary to permit the molecules to rearrange themselves uniformly throughout the material. No harm would be done the conductor by maintaining it at this temperature for a longer period, except that it is unduly softened and the shape may therefore be changed by the forces applied to move it through the furnace, and time is lost in the operation. Since the conductor and tape are cold when they enter the furnace, heat must be applied for a considerable time to raise the tape to the desired temperature, but by heating the furnace much above that temperature the time for this required heating may be materially reduced.

Another feature of the invention has to do with feeding the loaded conductor through the furnace without elongating or shortening it. The conductor may be sufficiently softened under the action of heat to permit it to be distorted. Even when the change in length is scarcely perceptible, the electrical properties of the conductor after heat treatment are varied. According to the present invention, forces applied to the conductor to move it through the furnace and cooling chamber are so small that all danger of changing the length or form of the conductor is removed.

A complete disclosure of one embodiment

of the invention is to be found in the following specification and accompanying drawing.

Referring to the drawing, which is diagrammatic, a taped conductor 1 is unwound from the supply reel 2, passed through the furnace 3 and cooling chamber 4 and coiled upon the receiving reel 5. The supply reel may be large and heavy and not always completely balanced with respect to its bearings. If sufficient tension is applied to the conductor to rotate the supply reel as well as to pull the conductor into and along the tube 12 which extends through the furnace and the tube of the same internal diameter extending through the cooling chamber, distortion of the conductor may be produced at its hottest portion. This is prevented in the manner described below.

The taped conductor 1 is first passed through the furnace 6, which is maintained at such a temperature, well above 850° or 900° C., that, as it leaves this furnace, it is at or somewhat above that temperature. The second furnace or furnace section is maintained at a temperature of about 850° or 900° C., and is of such a length that at the velocity with which the conductor is moved, the latter will be maintained at this temperature the required time. The furnaces 6 and 7 are shown, by way of example, as having electric heating coils 8 and 9, respectively, of different size. The two furnaces 6 and 7 are contiguous and form in effect a heating chamber with two zones differing in temperature.

The cooling chamber 4, which is illustrated as a water jacket, should be such as to cool the alloy at a rate between that necessary for annealing and rate which would set up stresses in the material when cold.

The tube 12 through which the conductor passes during the heat treatment has a perforation within a jacket 10 into which is fed a substantially non-oxidizing and non-reducing atmosphere, preferably commercially prepared nitrogen, through the supply pipe 11. The gas enters the opening in the tube in the jacket 10 and flows in both directions to the two exits. This feature per se is the invention of another and is described and claimed in U. S. patent of J. W. Harris 1,586,897, granted June 1, 1926.

The means illustrated for carrying out the provisions of this invention by which forces upon the heated conductor are kept at a safe low value includes a motor 13 from which a constant driving force is applied to the reel 2. This motor likewise drives the reel 5 through the variable coupling consisting of a belt 14 and an adjustable idling pulley 15. The driven pulley attached to the reel 5 is slightly smaller in diameter than that upon the reel 2 and the idling pulley 15 is adjusted so that the belt 14 slips easily upon either the driving or driven pulley, there preferably being a continual slip during operation. This adjustment is such that the belt begins to slip to a greater extent whenever the tension applied to the conductor from the reel 5 is great enough to tend to increase the speed of the reel 2. There is at times a slight sag in the conductor between the point where it leaves the reel 2 and where it enters the tube 12, and there may also be a slight loosening of a turn of the conductor upon the reel 2. The reel 5 will then tend to increase its speed slightly until this slack is taken up, after which there is an immediate reduction in the speed of this reel again. It would be impracticable to drive reels 2 and 5 from the same or separate sources of power at the same uniform rate of speed, since, as the conductor is unwound from one and wound upon the other, the effective diameters of the coils and, therefore, the rates at which the conductor would move at the peripheries of the reels if unrestrained, would differ. A slip, therefore, is normally permitted to take place between the belt 14 and the driving or driven pulley.

While the features of this invention were developed in connection with the heat treatment of conductors loaded with magnetic alloy, it is obvious that they are broader than that in their application, and this has been borne in mind in drafting the appended claims.

What is claimed is:

1. Apparatus for heat treating a conductor, part at least of which is of magnetic alloy, to develop a desired value of permeability in said alloy, comprising a heating chamber having two zones differing in temperature, a cooling chamber, a heat resisting tube extending through said heating chamber, and means for passing said conductor through said tube at a substantially uniform rate and under forces insufficient to cause it to shorten or lengthen or otherwise change its form in the heating chamber.

2. Apparatus for heat treating an electrical conductor having a copper core surrounded with magnetic material, comprising a heating chamber, a cooling chamber, a heat resisting tube extending through said heating chamber and having an internal diameter not greatly in excess of the diameter of said conductor, means for feeding the conductor to said tube, means for receiving the conductor from said cooling chamber, a source of power for driving both said means, and a tension regulator for regulating the driving force applied to the receiving means to prevent distortion of the conductor in the furnace by the application of force to said conductor by said means.

3. The method of heat treating a compound conductor comprising a copper wire surrounded by a layer of material in which a desired value of permeability is to be developed by said heat treatment, the conductor

being heat treated in a furnace in which it is passed continuously through a tube extending through the furnace, which method comprises heating the compound conductor soon after it enters the tube to such a temperature that the copper is softened to an extent which will cause it to be deformed if the moving force is suddenly materially increased, and automatically maintaining the moving force substantially constant.

In witness whereof, I hereunto subscribe my name this 17th day of November A. D., 1922.

GUSTAF W. ELMEN.