May 7, 1957 N. GOLDENBERG 2,791,461

SUPPORT CLAMP

Filed Feb. 17, 1953

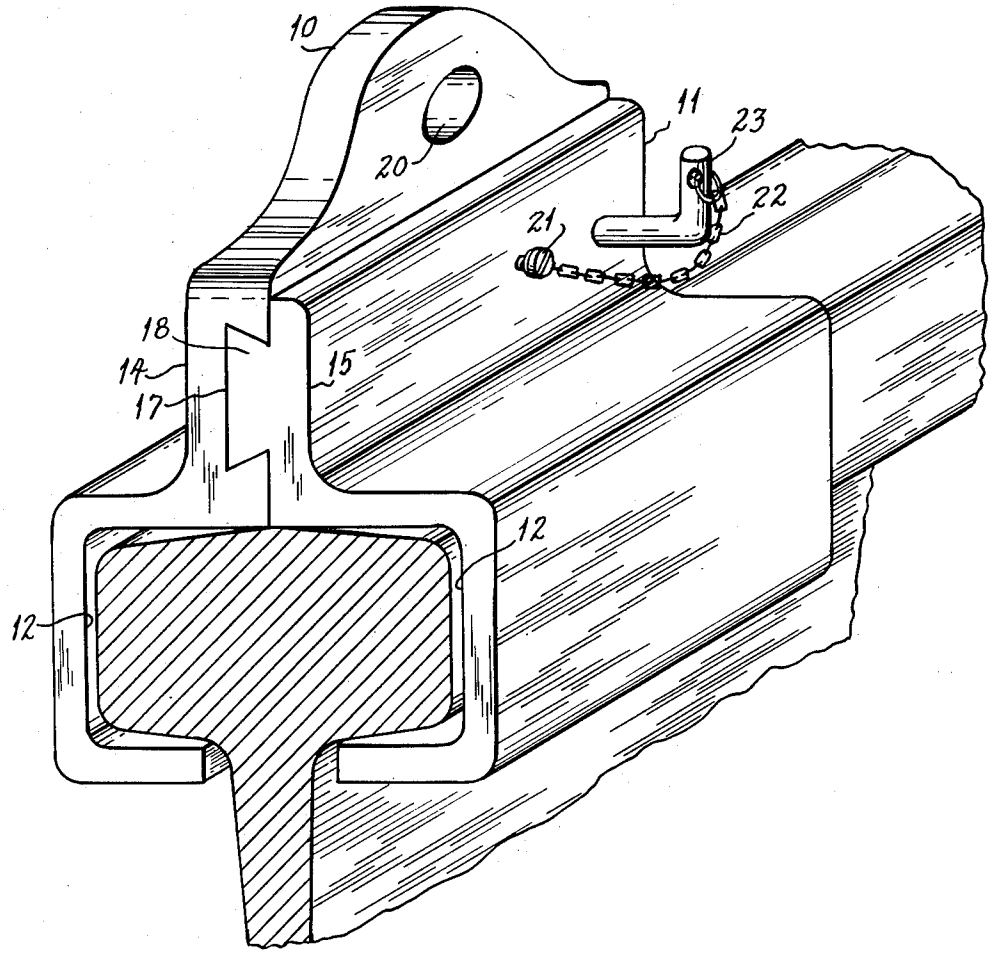

INVENTOR.
NATHAN GOLDENBERG
BY George Siplin
ATTORNEY

United States Patent Office 2,791,461 Patented May 7, 1957

2,791,461

SUPPORT CLAMP

Nathan Goldenberg, New York, N. Y.

Application February 17, 1953, Serial No. 337,452

1 Claim. (Cl. 294—85)

(Granted under Title 35, U. S. Code (1952), sec. 266)

The invention described herein may be manufactured and used by or for the Government of the United States of America for governmental purposes without the payment of any royalties thereon or therefor.

This invention relates to support clamps and more particularly to safety support clamps for use on overhead crane rails.

In many modern industrial installations particularly those which are in the category of heavy industry, a standard item of basic equipment is the overhead crane. Generally this overhead crane may be comprised of a pair of rails which extend longitudinally along the building structure at a convenient height above the ground. Mounted for movement along these rails is a trolley which extends along the rails and which trolley is provided with suitable hoisting equipment. Adjacent the rails there is usually provided a series of parallel conductor bars which cooperate with corresponding series of brushes which are carried by the overhead crane. Through these conductor bars and brushes power is supplied to the motor or motors which transform the electric power into power which is characterized by longitudinal motion of the overhead crane along the crane rails and also by the raising and lowering of the hoisting cable relative to the floor below the overhead crane.

As may be readily anticipated in equipment of this nature, mechanical and electrical failures occur from time to time. To repair or replace the parts which suffer failure in operation of the overhead crane it is necessary that a maintenance man be brought to the location of the trouble. This is a particularly hazardous operation since the overhead rails are generally greased and there is no adequate supporting structure directly adjacent the rails. This has to be faced more regularly by the maintenance man in the more efficient industrial enterprises where there is a provision for periodic inspection of the equipment.

One method provided in the prior art for the safety of the maintenance man included the rigging of a lifeline adjacent the rails which lifeline was adapted to receive a hook clamp or a pair of hook clamps attached to the belt of the maintenance man. This method was not too satisfactory since it is extremely expensive to rig a lifeline each time a maintenance man has to go up for inspection or repair. A further disadvantage is that lifelines are not conveniently spaced from the rails all along their lengths. A still further disadvantage is that it is necessary for the maintenance man to remove his safety hook clamps from the line that is rigged along the rail each time he comes adjacent to a support for the lifeline.

The safety clamp of the present invention overcomes the above disadvantages by being constructed and arranged for coupling to the rail itself. The clamp is made of two parts which easily come together and are locked by a key whereby it is easy to assemble and there is no danger of the clamp coming apart.

An object of this invention is to provide a support clamp.

A further object is to provide a safety support clamp which is adapted to be used by men who work on overhead crane rails.

A further object is to provide a safety support clamp which is adapted to be used on overhead crane rails and which is easily attachable and detachable to provide for safe and efficient operation.

Other objects and many of the attendant advantages of this invention will be readily appreciated as the same becomes better understood by reference to the following detailed description when considered in connection with the accompanying drawings wherein:

The single figure is a perspective view of the support clamp of this invention assembled on an overhead crane rail.

In the single figure there is shown a preferred embodiment of a clamp of this invention. The clamp is shown in assembled relationship on a crane rail. The clamp is made up of two parts **10** and **11**. Each of the parts **10** and **11** is in the form of a U-shaped portion **12** which U-shaped portion is integrally joined to laterally extending flat portions **14** and **15** respectively. The portions **14** and **15** of the clamp are provided with longitudinally extending male and female dovetailing sections **17** and **18** respectively. Farthest removed from the U-shaped portion **12** of the clamp section **10** is a smoothly rounded end having a bore **20**. The bore **20** is designed to receive a safety belt hook clip (not shown). Secured to the other clamp section **11** is a fastening **21** which may be a machine screw. Coupled to the fastening **21** and extending therefrom is a chain **22** cut to a conveniently short length. Joined to the end of the chain **22** is a key **23**. The key **23** may be in any convenient form its purpose being directed to securing the sections **10** and **11** of the clamp in assembled relationship. The locking part of the key **23** (not shown) may be in the form of a straight axial section adapted for close friction fit with the sections **10** and **11** of the clamp. Alternatively it may be threaded at the end for threaded engagement with section **10** of the clamp or it may be provided with a joint whereby a spring biased pivoted portion connected thereto can abut the outer surface of the section **10** of the clamp or it may be provided with a bore at its end whereby a cotter pin may be secured in place or it may be provided at its end with a pair of spring biased expansion wings. The examples given are merely illustrative of the great variety possible shapes and forms the key **23** may assume. Assuming that the type of key chosen is the one that is threaded at its end for threaded engagement with section **10** of the clamp; the section **11** is drilled and the section **10** is drilled and tapped so as to receive the key **23** to lock members **10** and **11** in assembled relationship.

In operation the clamp sections **10** and **11** may be carried in the tool kit of a maintenance man who works on overhead crane rails. The clamp may be conveniently made of a lightweight material and of such small size to permit ease of handling by the maintenance man. Assuming that the maintenance man has just climbed out onto an overhead crane rail he first takes this safety clamp out of his tool kit and placing the U-shaped portion **12** of each of the sections **10** and **11** of the clamp in registration with the rail but longitudinally displaced from one another by the length of the clamp the two parts are then slid into engagement by cooperation of the dovetailing sections **17** and **18**. The key **23** is then assembled into locking engagement with sections **10** and **11** of the clamp so as to preclude accidental separation of the sections. Immediately following that the maintenance man

grasps the hook dangling from the end of his safety belt and couples it to the clamp through the bore **20**. As shown on the drawing there is sufficient clearance provided between the assembled clamp and the sides of the rail whereby the clamp may be slid along the rail to any position where the maintenance man desires to go. At no time is it necessary to disconnect the clamp which provides one of the most desirable features of this invention. The clamp in no way interferes with the freedom of action of the maintenance man. In the event that he does lose his footing on the rail the maximum distance that he would fall would be equal to the length of the depending portion of his safety belt which is attached to the clamp. The clamp is easy to use, safe and is much less costly than the life lines which are ordinarily required for inspection or repair work on overhead crane rails.

Obviously many modifications and variations of the present invention are possible in the light of the above teachings. It is therefore to be understood that within the scope of the appended claim the invention may be practiced otherwise than as specifically described.

I claim:

A free sliding safety device adapted for freely slidably engaging the head portion of a rail, said safety device comprising, a pair of sections each of which is formed with a channel which in cross-sectional contour approximates one-half the cross-sectional shape of the head portion of the rail, said sections in assembled relation defining a full channel having a cross sectional area slightly larger than the cross sectional area of the rail head to provide free sliding on the rail, one of said sections being

further formed with a groove that is parallel to the channel therein and that in cross-section widens between the mouth and the bottom thereof, the other of said sections being further formed with a projection that is parallel to the channel therein and that in cross-section is similar to and slightly smaller than the groove formed in said one section, said sections including said groove and projection being free of portions extending in a direction oblique to the parts engaging the rail whereby said sections are adapted to be disposed against opposite sides of the head portion of the rail spaced apart longitudinally of the rail and slid along the rail toward each other to bring the projection and groove of the respective sections into registration, said sections in all longitudinal positions relative to each other during assembly or disassembly defining a full channel of constant cross section to provide under all conditions free sliding on the rail and thus under all conditions prevent clamping on the rail, at least one of said sections having a portion adapted for engagement with the clip of a safety belt, and means for engaging and locking all pieces including said sections against sliding movement relative to each other after the projection and groove are in registration whereby said safety device is slidable as a unit along the rail.

References Cited in the file of this patent

UNITED STATES PATENTS

1,231,513	Evans	June 26, 1917
1,531,091	Haasted	Mar. 24, 1925
1,559,965	Jessip	Nov. 3, 1925
1,568,975	Hartwell	Jan. 12, 1926