PCT WORLD INTELLECTUAL PROPERTY ORGANIZATION
International Bureau

INTERNATIONAL APPLICATION PUBLISHED UNDER THE PATENT COOPERATION TREATY (PCT)

(51) International Patent Classification 6 :
B64D 11/00, G09F 23/00

A1

(11) International Publication Number: **WO 98/24689**

(43) International Publication Date: 11 June 1998 (11.06.98)

(21) International Application Number: PCT/IT97/00294

(22) International Filing Date: 21 November 1997 (21.11.97)

(30) Priority Data:
MI96U000796 4 December 1996 (04.12.96) IT

(71)(72) Applicant and Inventor: DANESI, Francesco [IT/IT]; Via Dell'Annunciata, 23/4, I–20121 Milano (IT).

(74) Agent: CICOGNA, Franco; Ufficio Internazionale Brevetti, Dott. Prof. Franco Cicogna, Via Visconti di Modrone, 14/A, I–20122 Milano (IT).

(81) Designated States: AL, AM, AT, AU, AZ, BA, BB, BG, BR, BY, CA, CH, CN, CU, CZ, DE, DK, EE, ES, FI, GB, GE, GH, HU, IL, IS, JP, KE, KG, KP, KR, KZ, LC, LK, LR, LS, LT, LU, LV, MD, MG, MK, MN, MW, MX, NO, NZ, PL, PT, RO, RU, SD, SE, SG, SI, SK, SL, TJ, TM, TR, TT, UA, UG, US, UZ, VN, YU, ZW, ARIPO patent (GH, KE, LS, MW, SD, SZ, UG, ZW), Eurasian patent (AM, AZ, BY, KG, KZ, MD, RU, TJ, TM), European patent (AT, BE, CH, DE, DK, ES, FI, FR, GB, GR, IE, IT, LU, MC, NL, PT, SE), OAPI patent (BF, BJ, CF, CG, CI, CM, GA, GN, ML, MR, NE, SN, TD, TG).

Published
With international search report.

(54) Title: AIRPLANE SEAT HAVING AN IMPROVED SEAT BACK

(57) Abstract

The present invention relates to an airplane seat having an improved seat back, which comprises a body defining a seat portion to which a seat back is coupled. The main feature of the invention is that the seat back comprises, on the rear surface thereof, at least a portion provided for receiving messages or advertising communications.

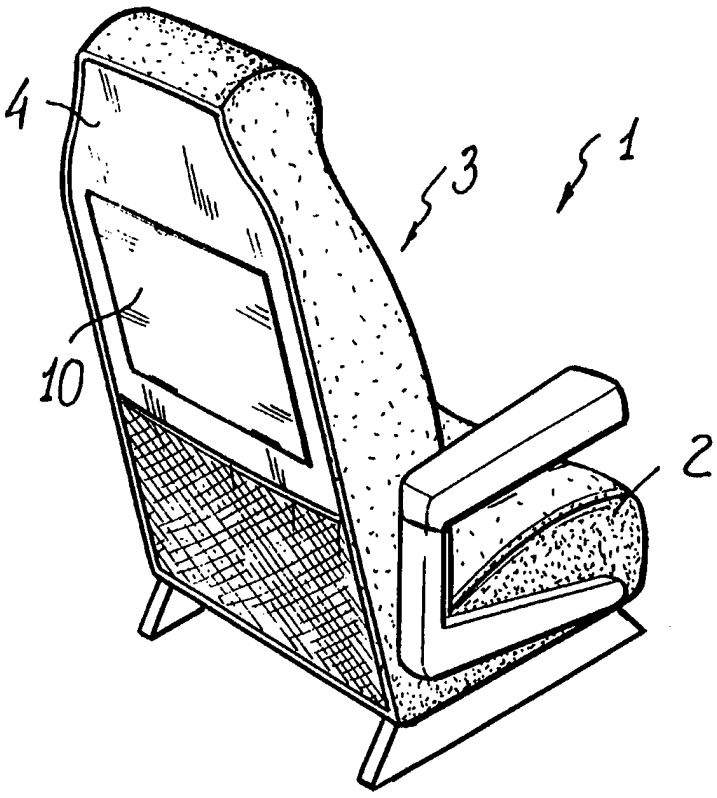

FOR THE PURPOSES OF INFORMATION ONLY

Codes used to identify States party to the PCT on the front pages of pamphlets publishing international applications under the PCT.

AL	Albania	**ES**	Spain	**LS**	Lesotho	**SI**	Slovenia
AM	Armenia	**FI**	Finland	**LT**	Lithuania	**SK**	Slovakia
AT	Austria	**FR**	France	**LU**	Luxembourg	**SN**	Senegal
AU	Australia	**GA**	Gabon	**LV**	Latvia	**SZ**	Swaziland
AZ	Azerbaijan	**GB**	United Kingdom	**MC**	Monaco	**TD**	Chad
BA	Bosnia and Herzegovina	**GE**	Georgia	**MD**	Republic of Moldova	**TG**	Togo
BB	Barbados	**GH**	Ghana	**MG**	Madagascar	**TJ**	Tajikistan
BE	Belgium	**GN**	Guinea	**MK**	The former Yugoslav Republic of Macedonia	**TM**	Turkmenistan
BF	Burkina Faso	**GR**	Greece			**TR**	Turkey
BG	Bulgaria	**HU**	Hungary	**ML**	Mali	**TT**	Trinidad and Tobago
BJ	Benin	**IE**	Ireland	**MN**	Mongolia	**UA**	Ukraine
BR	Brazil	**IL**	Israel	**MR**	Mauritania	**UG**	Uganda
BY	Belarus	**IS**	Iceland	**MW**	Malawi	**US**	United States of America
CA	Canada	**IT**	Italy	**MX**	Mexico	**UZ**	Uzbekistan
CF	Central African Republic	**JP**	Japan	**NE**	Niger	**VN**	Viet Nam
CG	Congo	**KE**	Kenya	**NL**	Netherlands	**YU**	Yugoslavia
CH	Switzerland	**KG**	Kyrgyzstan	**NO**	Norway	**ZW**	Zimbabwe
CI	Côte d'Ivoire	**KP**	Democratic People's Republic of Korea	**NZ**	New Zealand		
CM	Cameroon			**PL**	Poland		
CN	China	**KR**	Republic of Korea	**PT**	Portugal		
CU	Cuba	**KZ**	Kazakstan	**RO**	Romania		
CZ	Czech Republic	**LC**	Saint Lucia	**RU**	Russian Federation		
DE	Germany	**LI**	Liechtenstein	**SD**	Sudan		
DK	Denmark	**LK**	Sri Lanka	**SE**	Sweden		
EE	Estonia	**LR**	Liberia	**SG**	Singapore		

Description

AIRPLANE SEAT HAVING AN IMPROVED SEAT BACK

BACKGROUND OF THE INVENTION

The present invention relates to an airplane seat provided with an improved seat back.

As is known a great problem of the advertising field is that of finding new advertising means for allowing advertising messages or communications to be easily conveyed to and received by possible users, without causing troubles for the users or originating problems related to the arrangement and/or displaying of the advertising messages.

SUMMARY OF THE INVENTION

Accordingly, the aim of the present invention is to solve the above mentioned problem, by providing an airplane seat including an improved seat back, which allows advertising messages and/or communications to be easily displayed to a possible user.

Within the scope of the above mentioned aim, a main object of the present invention is to provide such an airplane seat in which are provided means for conveying a plurality of advertising messages, in which said advertising messages are furthermore integrated with other useful communications, thereby providing the user both with advertising and useful communications.

Another object of the present invention is to provide such an airplane seat which, while having the above mentioned improved features, can be made in a comparatively simple manner.

Yet another object of the present invention is to provide such an airplane seat, including an improved seat back, which can be easily manufactured by using easily

commercially available elements and materials and which, moreover, is very competitive from a mere economic standpoint.

According to one aspect of the present invention, the above mentioned aim and objects, as well as yet other objects, which will become more apparent hereinafter, are achieved by an airplane seat including an improved seat back, which comprises a seat body defining a seat portion to which a seat back is coupled, characterized in that said seat back has a rear surface thereof on which is provided at least a portion so designed and arranged to receive advertising messages or communications.

BRIEF DESCRIPTION OF THE DRAWINGS

Further characteristics and advantages of the present invention will become more apparent hereinafter from the following detailed disclosure of an airplane seat having an improved seat back, which is illustrated, by way of an indicative, but not limitative example, in the figures of the accompanying drawings, where:

Figure 1 is a schematic perspective view illustrating an airplane seat;

Figure 2 is a rear view illustrating a pair of airplane adjoining seats;

Figure 3 is a perspective view illustrating an airplane seat, said view clearly showing a portion of the seat specifically designed and arranged to receive advertising messages; and

Figure 4 is a rear elevation view illustrating the airplane seat according to the present invention.

DESCRIPTION OF THE PREFERRED EMBODIMENTS

With reference to the number references of the above mentioned figures, the airplane seat, according to the present invention, which has been generally indicated

by the reference number 1, comprises a seat body defining a seat portion 2 to which a seat back 3 is coupled, said seat back 3 having any desired configurations.

The main feature of the present invention is that, on the rear surface 4 of the seat back 3, is provided a seat back portion which has bee specifically arranged and designed to receive advertising messages and/or communications.

This advertising portion can be formed according to a plurality of forming methods.

Actually, said advertising portion can be directly formed at the shelf element 10 usually associated with an airplane seat for providing a resting surface, or it can also be provided inside the seat 11 being closed by said tilting shelf 10.

The mentioned advertising portion can comprise a simple advertising panel including thereon the desired advertising messages, or it can comprise an advertising screen 12, allowing to display advertising messages and communications, and alternating said advertising messages and communications with other useful information.

As an example, it is pointed out that the display screen can supply to the user or passenger useful information such as information related to the landing place, with other information related touristic aspects and hotels, restaurants or the like places, with a consequent advertising of said information.

In this connection it should be apparent that the advertising portion can be made by any suitable making method, provided that it is formed on the rear surface of an airplane seat back, thereby the advertising messages will be easily and quickly received by the passengers arranged in the rear seats, thereby providing an advertising arrangement which does not cause any troubles

to the user or passenger while being particularly efficient.

Alternatively, said advertising messages can also be displayed on suitable TV screens which can be housed in other positions of the seat or arm thereof to be easily presented to the passenger.

From the above disclosure it should be apparent that the invention fully achieves the intended aim and objects.

In particular, an airplane seat has been provided, which includes novel advertising means which would be very efficient for airplane passengers.

In practicing the invention, the used materials, provided that they are compatible to the intended application, as well as the contingent size and shapes, can be any, depending on requirements.

CLAIMS

1. An airplane seat including an improved seat back, which comprises a seat body defining a seat portion to which a seat back is coupled, characterized in that said seat back has a rear surface thereof on which is provided at least a portion so designed and arranged to receive advertising messages or communications.

2. An airplane seat according to the preceding claim, characterized in that said advertising portion is provided at a tilting shelf providing a resting panel associated with said seat.

3. An airplane seat according to one or more of the preceding claims, characterized in that said advertising portion is formed on a bottom of a housing of said tilting shelf.

4. An airplane seat according to one or more of the preceding claims, characterized in that said advertising portion comprises advertising panels, prints and the like.

5. An airplane seat according to one or more of the preceding claims, characterized in that said advertising portion comprises a TV screen.

6. An airplane seat according to one or more of the preceding claims, characterized in that said TV screen is of a liquid crystal type.

7. An airplane seat according to one or more of the preceding claims, characterized in that said TV screen is adapted to display advertising messages and communications integrated by an useful information display.

8. An airplane seat according to one or more of the preceding claims, characterized in that said airplane seat comprises TV screen means housed in any desired portions of said seat or of an arm thereof and adapted to be arranged in front of a passenger.

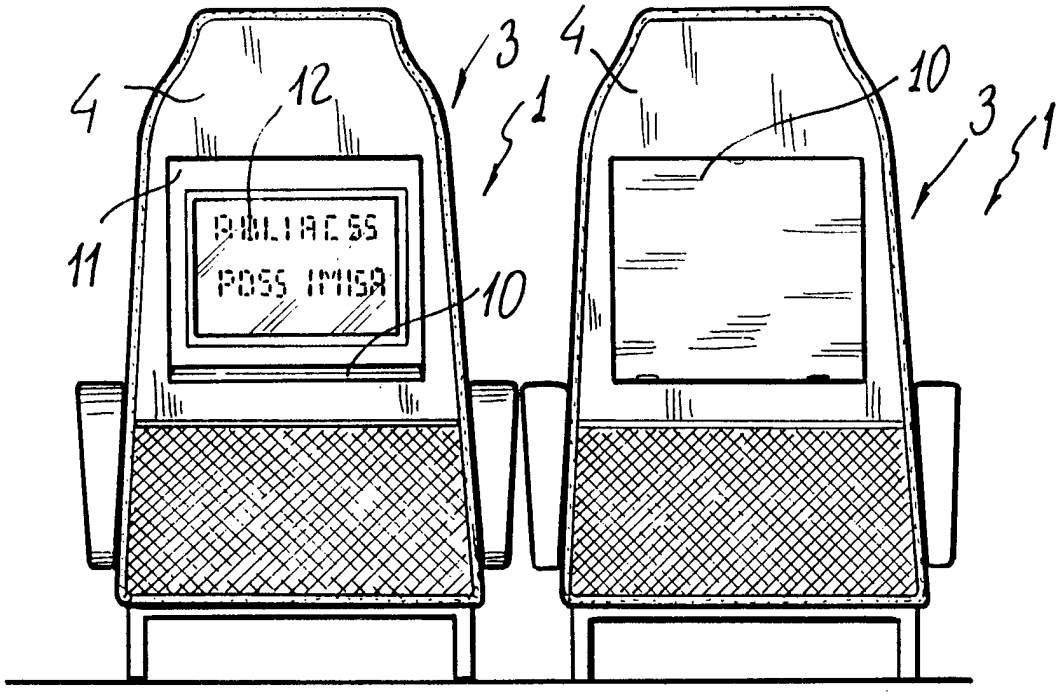

FIG. 2

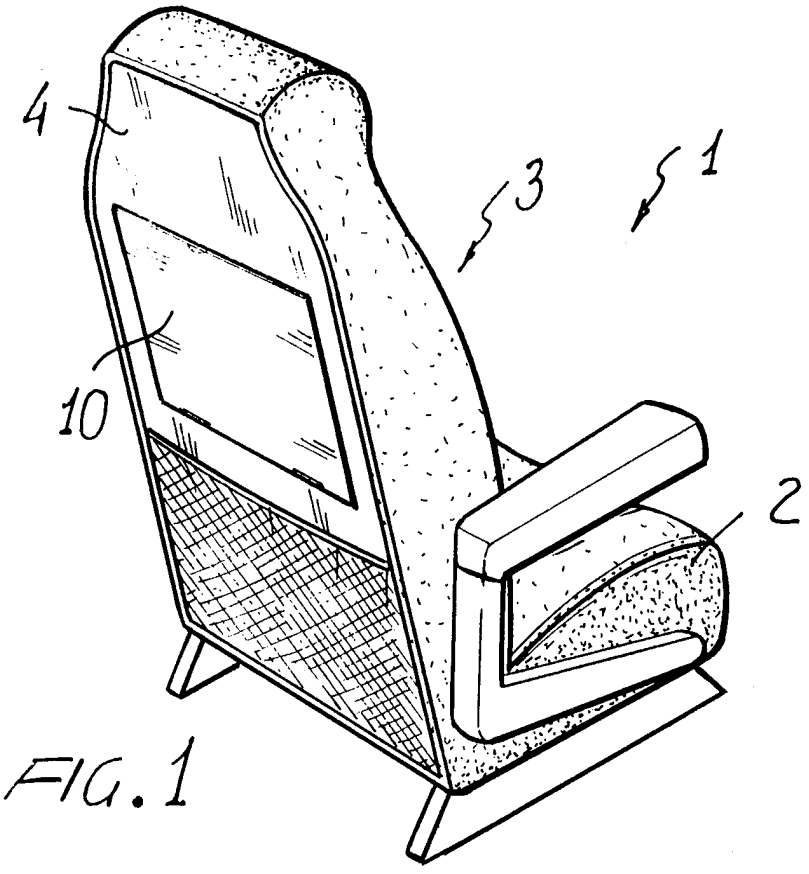

FIG. 1

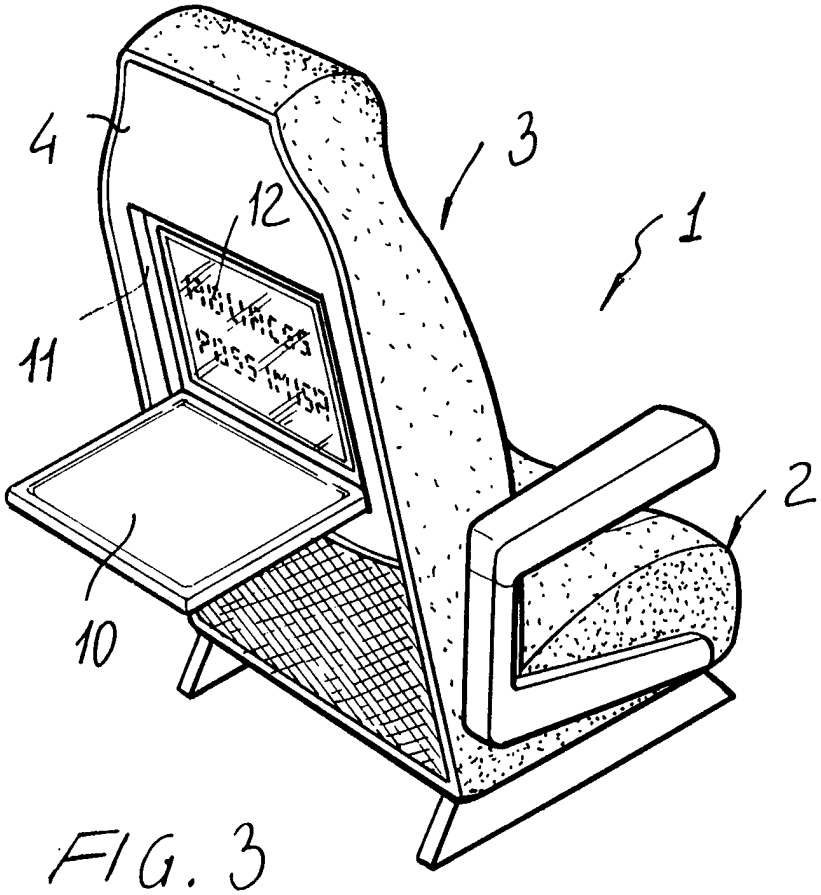

FIG. 3

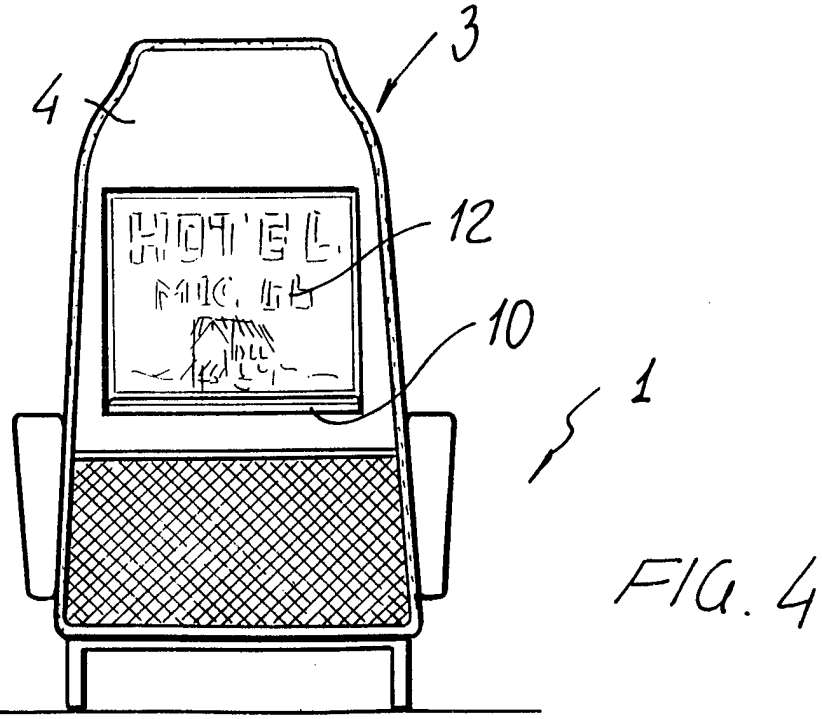

FIG. 4

INTERNATIONAL SEARCH REPORT

International Application No
PCT/IT 97/00294

A. CLASSIFICATION OF SUBJECT MATTER
IPC 6 B64D11/00 G09F23/00

According to International Patent Classification (IPC) or to both national classification and IPC

B. FIELDS SEARCHED

Minimum documentation searched (classification system followed by classification symbols)
IPC 6 B64D G09F B60N

Documentation searched other than minimum documentation to the extent that such documents are included in the fields searched

Electronic data base consulted during the international search (name of data base and, where practical, search terms used)

C. DOCUMENTS CONSIDERED TO BE RELEVANT

Category °	Citation of document, with indication, where appropriate, of the relevant passages	Relevant to claim No.
X	US 5 010 668 A (ZELIGSON STEPHEN J) 30 April 1991 see column 1, line 6 - line 9; figures 5,6	1-4
X	FR 2 503 905 A (SEDANO LUC DE) 15 October 1982 see page 1, line 1 - line 20	1-4
X	FR 2 393 553 A (MAURY GEORGES) 5 January 1979 see page 8, line 7 - line 10	1
X	US 4 756 528 A (UMASHANKAR RAMON) 12 July 1988 see column 1, line 55 - column 2, line 2	1,5,6

-/--

[X] Further documents are listed in the continuation of box C.

[X] Patent family members are listed in annex.

° Special categories of cited documents :

"A" document defining the general state of the art which is not considered to be of particular relevance

"E" earlier document but published on or after the international filing date

"L" document which may throw doubts on priority claim(s) or which is cited to establish the publication date of another citation or other special reason (as specified)

"O" document referring to an oral disclosure, use, exhibition or other means

"P" document published prior to the international filing date but later than the priority date claimed

"T" later document published after the international filing date or priority date and not in conflict with the application but cited to understand the principle or theory underlying the invention

"X" document of particular relevance; the claimed invention cannot be considered novel or cannot be considered to involve an inventive step when the document is taken alone

"Y" document of particular relevance; the claimed invention cannot be considered to involve an inventive step when the document is combined with one or more other such documents, such combination being obvious to a person skilled in the art.

"&" document member of the same patent family

1

Date of the actual completion of the international search	Date of mailing of the international search report
16 February 1998	24/02/1998

Name and mailing address of the ISA	Authorized officer
European Patent Office, P.B. 5818 Patentlaan 2 NL - 2280 HV Rijswijk Tel. (+31-70) 340-2040, Tx. 31 651 epo nl, Fax: (+31-70) 340-3016	Hauglustaine, H

Form PCT/ISA/210 (second sheet) (July 1992)

INTERNATIONAL SEARCH REPORT

International Application No
PCT/IT 97/00294

C.(Continuation) DOCUMENTS CONSIDERED TO BE RELEVANT

Category °	Citation of document, with indication,where appropriate, of the relevant passages	Relevant to claim No.
X	WO 90 15508 A (MARCONI GEC LTD) 13 December 1990 see page 3, line 5 - line 9	1,5,7,8
X	US 4 630 821 A (GREENWALD LARRY H) 23 December 1986 see the whole document	1,5

Form PCT/ISA/210 (continuation of second sheet) (July 1992)

INTERNATIONAL SEARCH REPORT

Information on patent family members

International Application No
PCT/IT 97/00294

Patent document cited in search report	Publication date	Patent family member(s)	Publication date
US 5010668 A	30-04-91	NONE	
FR 2503905 A	15-10-82	NONE	
FR 2393553 A	05-01-79	CH 602377 A	31-07-78
US 4756528 A	12-07-88	NONE	
WO 9015508 A	13-12-90	GB 2235800 A	13-03-91
		AU 5531590 A	07-01-91
		CA 2033054 A	01-12-90
		CN 1048478 A	09-01-91
		EP 0427831 A	22-05-91
		JP 4501940 T	02-04-92
US 4630821 A	23-12-86	NONE	