United States Patent [19]

Desaar

[11] **3,907,264**

[45] **Sept. 23, 1975**

[54] **MEANS FOR CLEANING BLOWING NOZZLES IN STEEL PRODUCTION**

[76] Inventor: **René Desaar,** rue Michel Body, 67, B.4330 Grace-Hollogne, Belgium

[22] Filed: **Dec. 21, 1973**

[21] Appl. No.: **427,260**

[30] **Foreign Application Priority Data**

Jan. 22, 1973 Belgium 43986

[52] **U.S. Cl.** ..... **266/34 LM**

[51] **Int. Cl.**[2] **C21C 7/00**

[58] **Field of Search** ..... 266/34 L, 34 LM, 1 R

[56] **References Cited**

UNITED STATES PATENTS

2,822,163	2/1958	McFeaters	266/34 LM
3,394,928	7/1968	Wiedl	266/34 LM
3,556,501	1/1971	Skrzipczyk	266/34 LM

Primary Examiner—Gerald A. Dost

Attorney, Agent, or Firm—Young & Thompson

[57] **ABSTRACT**

Above a known container for producing steel having a metal structure to which is fixed a support carrying a winch for lowering and raising a blowing nozzle there is provided a cleaning device comprising a scraping means to contact and scrape at least a part of the outer surface of said nozzle when it is raised from a working position to a rest position for automatically removing material stuck to said nozzle.

20 Claims, 9 Drawing Figures

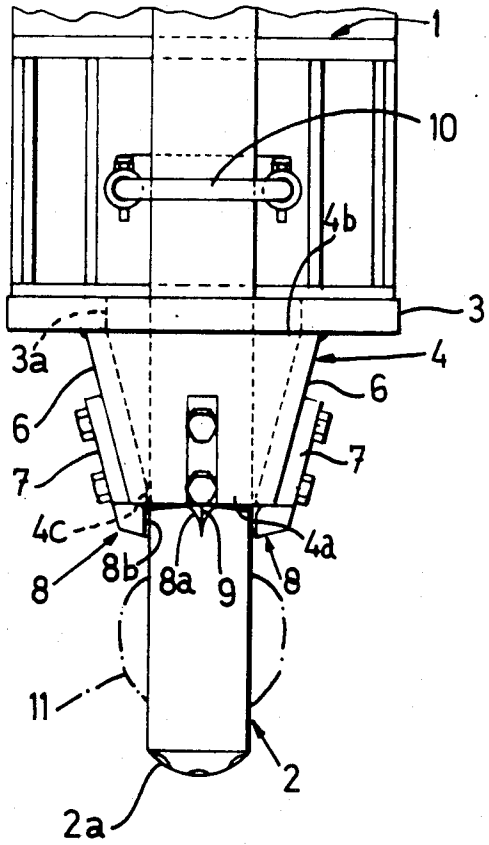

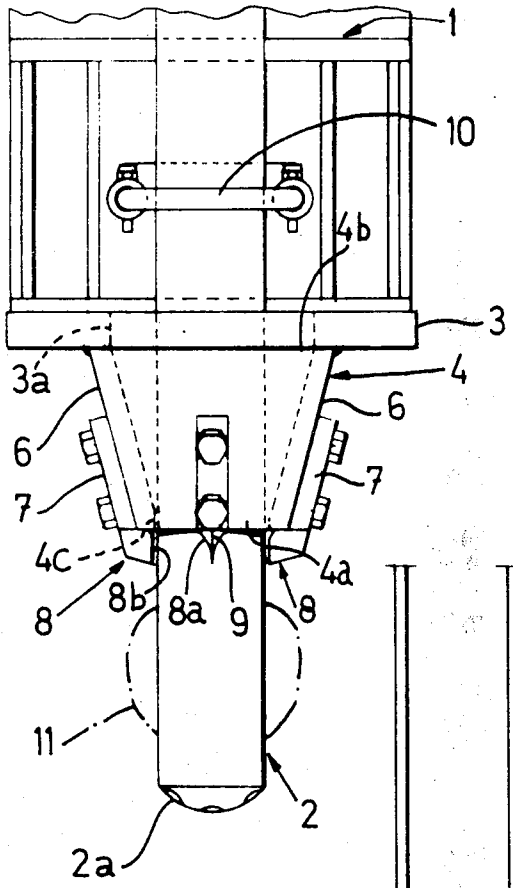
1
10
4b
3
3a
4
6
6
7
7
4c
4a
8
8b
8a
9
8
11
2
2a

FIG. 1

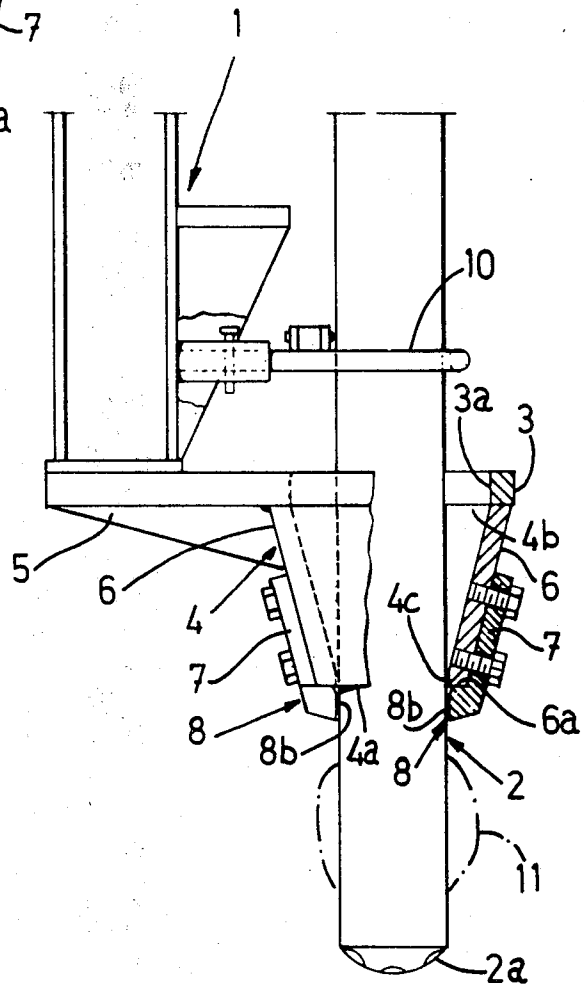
1
10
3a
3
4b
6
5
6
4
4c
7
7
8b
6a
8
8b
4a
8
2
11
2a

FIG. 2

FIG. 3

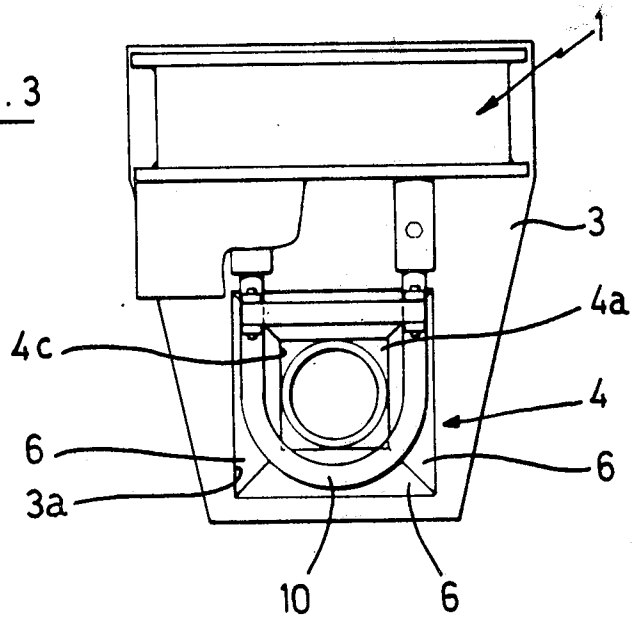

FIG. 4

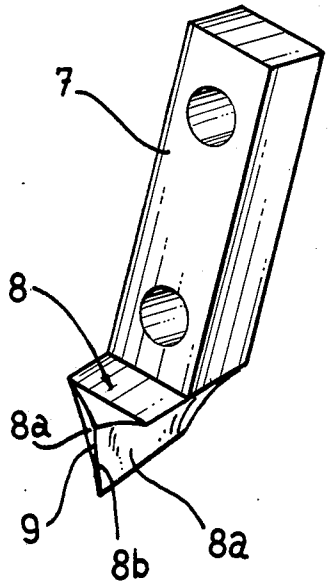

FIG. 5

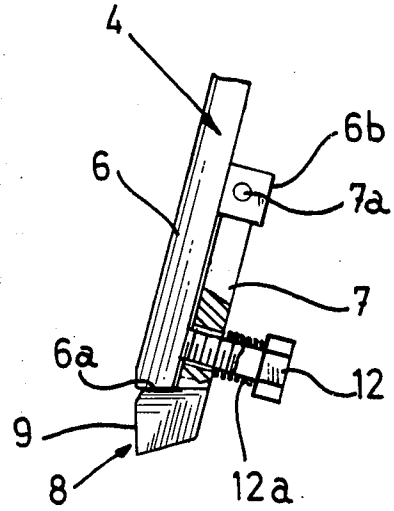

FIG. 6

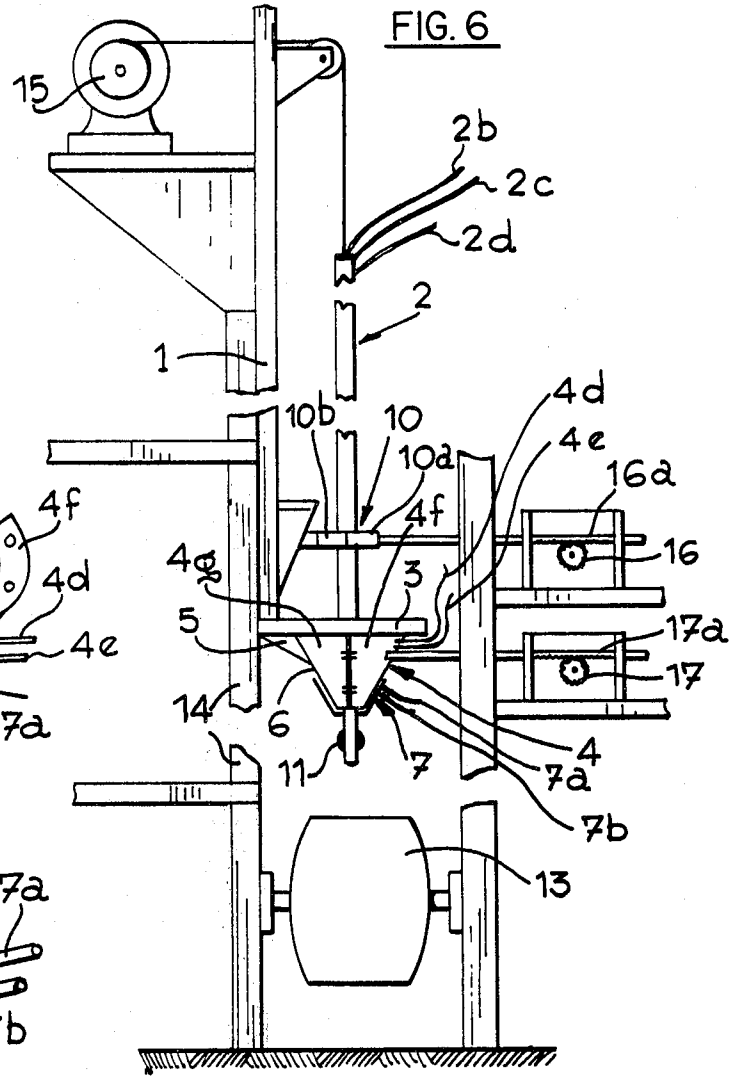

FIG. 7

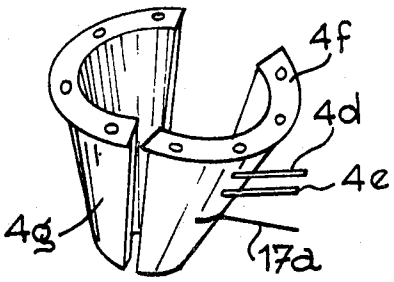

FIG. 8

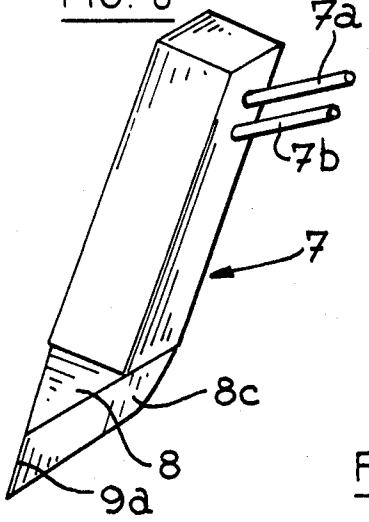

FIG. 9

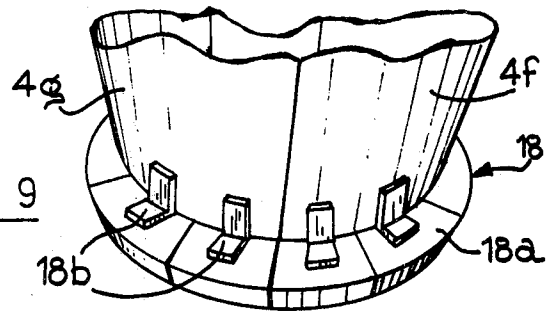

MEANS FOR CLEANING BLOWING NOZZLES IN STEEL PRODUCTION

The present invention relates to a device for cleaning a blowing nozzle used in the production of steel.

At present it is known to produce steel by subjecting a molten pig-iron charge and certain added elements to the action of air enriched with oxygen blown from above and introduced by means of nozzles in order to burn impurities or elements in the pig-iron. These nozzles, which are arranged above the container containing the charge, are operated by means of winches which lower the nozzles into the working position so that their ends enter the charge for the blowing period and then remove them therefrom by raising them. When the nozzles are in the working position their ends are covered with slag which becomes fixed thereto and adheres strongly until after a certain time an irregular mass is formed around them which becomes increasingly large and heavy. Thus it often happens that this mass deforms the nozzle which then strikes against the closure valves of the container containing the charge so that there is a risk of them being torn away, causing significant damage and representing a source of danger. Moreover when the nozzle is lowered once again into the blowing position the mass can strike against the valve and it is possible for the winch cable to jump out of its groove so that the nozzle is no longer held and drops down.

At present to avoid this problem a groove is made in the mass by fusion by using a blow torch, which permits the removal of the slag layers of the mass with the aid of hammers and chisels. However, as this work is performed manually it requires a relatively long stoppage. Therefore cleaning is only performed at the end of a relatively long period of time when the mass has already reached a certain volume. Consequently the above-indicated difficulties may be encountered.

The problem of the invention is to provide a device which permits the automatic cleaning of blowing nozzles whenever they pass from the working position to the rest position so as to prevent the formation and increase in volume of a mass of slag on the ends thereof.

According to the invention, there is provided a device for cleaning an elongate blowing nozzle for use in the production of steel and when mounted so as to be raisable and lowerable by means of a winch mounted on a support, said device comprising a scraping means arranged to contact and scrape at least part of the outer surface of the nozzle when the nozzle is raised from a working position to a rest position, so as to automatically remove material stuck to the nozzle.

According to a preferred feature the scraping means is connected to a support fixed relative to the axis of the nozzle and said fixed support is preferably integral with the support of the winch for raising and lowering the nozzle.

According to another preferred feature the scraping means is mounted on a guide member for guiding the end of the nozzle in its downward movement, the guide member being mounted on the fixed support. This guide member is preferably a tapering hollow body oriented so as to have a large open base at its upper end and a small open base at its lower end, and along the axis of which the nozzle may move. Preferably the small open base has an orifice which is slightly larger than the nozzle.

According to yet another preferred feature the scraping means is removably mounted on the outside of the hollow body. This scraping means may comprise a scraping finger terminating in a tip arranged to contact the outer surface of the nozzle. Said tip may comprise curved surfaces and be supported on the lower edge of said hollow body.

According to yet another preferred feature the tip of the finger comprises two surfaces separated by a projecting edge; these surfaces may be curved, concave and like a ploughshare or they may be planar.

Other features of the invention will become apparent from the following description with reference to the accompanying drawings which show some embodiments of the invention solely for illustrative purposes. In the drawings:

FIGS. **1**, **2** and **3** are schematic views in front and side elevation and in plan (respectively) and partly in section of a cleaning device according to the invention;

FIG. **4** is a schematic perspective view of a scraping finger;

FIG. **5** is a schematic view in part sectional elevation showing a scraping finger mounted pivotally;

FIG. **6** is a somewhat schematic view of the entire apparatus of the present invention;

FIG. **7** is a perspective view of a modified form of guide member;

FIG. **8** is a perspective view of a modified form of scraping means; and

FIG. **9** is a fragmentary perspective view of still another form of scraping means.

In these drawings only those parts useful for the understanding of the invention have been shown, the others having been voluntarily omitted and the same reference notations always refer to the same parts.

Above a known container (not shown) used for producing steel is located a metal structure (not shown) to which is fixed a support **1** which carries a winch (not shown) which serves in known manner to operate a blowing nozzle **2** which can be lowered and raised.

At the base of winch support **1** is located a support which is fixed relative to the axis of the nozzle and comprises for example a plate **3** fixed by welding. In this plate **3** is provided a square hole **3***a* and from this plate is suspended a guide member for the end of the nozzle which comprises a hollow body **4**. This hollow body **4** is a frustum with a square base fixed in inverted manner, i.e., with its small base **4***a* directed downwardly whilst the large base **4***b* is disposed upwardly and surrounds the square hole **3***a* in plate **3**. This hollow body **4** is also held in place by a gusset **5**. The small base **4***a* has a passage orifice **4***c* which is slightly larger than the cylindrical body of the blowing nozzle **2**. On each side of the outer surfaces of the four inclined walls **6** of hollow body **4** is fixed in detachable manner, e.g., by screws, a scraping finger **7** which terminates in a curved tip **8**. This tip **8** is supported on the lower edge **6***a* of the walls of hollow body **4**. The fingers **7** are thus inclined relative to the longitudinal axis of the nozzle. On its inner side **8***b*, tip **8** is in contact with the cylindrical body of the nozzle **2** along a generator. Tip **8** has two curved concave surface portions **8***a*, intersecting along a projecting edge **9**. These two concave surface portions **8***a* are each like a ploughshare so that they form a wedge.

When, with the aid of the winch, nozzle **2** is lowered from the rest position to the working position or blow-

ing position its body first passes through a yoke **10** fixed to support **1** of the winch and forming a retaining member for the nozzle which then passes through square hole **3***a* of plate **3**. During this downward movement the end **2***a* of the nozzle is guided by the inner surfaces of the walls **6** of hollow body **4**, then it passes through orifice **4***c* of the small base. The centers of the retaining yoke **10**, of hole **3***a* and of orifice **4***c* are aligned on the same vertical line passing through the axis of hollow body **4**.

As soon as the blowing period is terminated the winch is operated and the nozzle is raised to the rest position. During this movement each of the tips **8** of scraping fingers **7** hollows out a groove in the mass of slag **11** which during blowing has agglomerated on the nozzle end and has become fixed thereto. Furthermore, due to the fact that the surface portions **8***a* are wedge-shaped they exert lateral forces on the sides of the groove and tend to move said sides apart which causes unsticking and disintegration of the mass **11** which is torn away in lumps. In this way the nozzle end is completely cleaned when returned to the rest position. Moreover this cleaning is performed in an automatic manner during each upward movement of the nozzle which prevents the formation of a large mass able to deform the end of the nozzle and cause accidents. In addition there is no loss of time because the device does not require any stoppage for cleaning purposes.

As shown in FIG. **5**, the finger **7** can be mounted on a pivot **7***a* carried by two lugs **6***b* fixed to the walls **6** of hollow body **4**. The finger is then maintained in place by a screw **12** that is threaded in body **4** and is provided with a compression spring **12***a*. As a result of this assembly it is possible to compensate for wear of tip **8**.

FIG. **6** shows the overall arrangement of the present invention, in which the fixed support **1** is a portion of a frame **14** that carries a winch **15** for raising and lowering the nozzle **2**.

In FIG. **7**, the hollow body **4** is formed by two semi-conical portions **4***f* and **4***g*. Portion **4***g* is attached to the end of a rack bar **17***a* driven by a pinion **17** so as to move the part **4***g* toward and away from **4***f*. The walls **6** of body **4** are hollow and a cooling liquid such as water is fed through conduit **4***d* and leaves through conduit **4***e*.

Scraping fingers **7** are hollow as seen in FIG. **8**, a cooling liquid being introduced through conduit **7***a* and leaving through conduit **7***b*. Tip **8** is bounded by two flat surfaces **8***c* which terminate at **9***a* in a surface that is applied against the nozzle.

As seen in FIG. **6**, the nozzle is guided by a stirrup **10** comprised of two parts of which one part **10***a* is attached to a rack bar **16***a* driven by a pinion **16** whereby it approaches and recedes from the other part **10***b*.

The nozzle **2**, as also shown in FIG. **6**, comprises in known manner a conduit **2***b* for the introduction of oxygen, a conduit **2***c* for the introduction of a cooling liquid such as water, and a conduit **2***d* for the removal of that cooling liquid.

FIG. **9** shows the hollow body **4** in the embodiment of FIG. **7** provided at its small base with a ring **18** of scraping means comprised by a plurality of segments **18***a* fixed in known manner to the portions **4***f* and **4***g* by means of lugs **18***b*.

Various other modifications can be made to the embodiment described without departure from the scope of the following claims.

Thus the hollow body can have a different shape and can therefore be for example a frustum having any polygonal base, square, hexagonal or the like or can be an inverted truncated cone. The scraping fingers can be hollow and provided with a cooling liquid passage. In the same way the walls of the hollow body can be hollow and cooled by a cooling liquid.

The members for maintaining the nozzle body in place can comprise several portions which are pivotable relative to one another and operated by a mechanical, hydraulic or similar means.

We claim:

1. In combination with a container for producing steel a support structure mounted above the container, a blowing nozzle mounted for vertical movement on and relative to said support structure, a winch on said support structure for raising and lowering said nozzle, a fixed guide member carried by said support structure for guiding the end of the nozzle in its downward movement, and scraping means mounted on said guide member and supporting said blowing nozzle for scraping at least a part of the outer surface of the nozzle when said nozzle is raised from a working position inside said container to a rest position.

2. A device as claimed in claim **1** wherein the guide member comprises a tapering hollow body oriented so as to have a large open base at its upper end and a small open base at its lower end, and along the axis of which the nozzle may move.

3. A device as claimed in claim **2** wherein said small open base has an orifice which is slightly larger than said nozzle.

4. A device as claimed in claim **2** wherein said hollow body is an inverted frustrum such as a square based frustrum.

5. A device as claimed in claim **2** wherein said hollow body is an inverted truncated cone.

6. A device as claimed in claim **2** wherein the walls of said hollow body include coolant passages.

7. A device as claimed in claim **2** wherein said hollow body comprises several portions displaceable relative to one another by mechanical or hydraulic means.

8. A device as claimed in claim **2** wherein the scraping means is removably mounted on the outside of the hollow body.

9. A device as claimed in claim **8** wherein said hollow body has a plurality of scraper fingers disposed around its periphery.

10. A device as claimed in claim **9** wherein said scraping means includes a scraping finger terminating in a tip arranged to contact the outer surface of the nozzle.

11. A device as claimed in claim **10** wherein said tip has two surfaces separated by a projecting edge.

12. A device as claimed in claim **11** wherein said surfaces are curved, concave, and like a ploughshare.

13. A device as claimed in claim **11** wherein said surfaces are planar.

14. A device as claimed in claim **10** wherein said scraping finger is hollow and includes a coolant passage.

15. A device as claimed in claim **9** wherein said tip is supported on the lower edge of said hollow body.

16. A device as claimed in claim **9** wherein said scraping finger is pivotally mounted on said hollow body and is provided with a compression spring.

17. A device as claimed in claim **1** including a retaining member for the nozzle.

18. A device as claimed in claim **17** wherein said retaining member is a yoke.

19. A device as claimed in claim **18** wherein said yoke comprises several portions displaceable relative to one another by mechanical or hydraulic means.

20. A device as claimed in claim **1** wherein said hollow body has along its lower edges crown-shaped portions having on the lower edge a surface which widens upwardly.

* * * * *