669314

P/00/001
Section 29
P/00/008
Section 29(1)
Regulation 3.1(2)

AUSTRALIA
Patents Act 1990

PATENT REQUEST AND NOTICE OF ENTITLEMENT

We NOHMI BOSAI LTD.

of 7-3, Kudan Minami 4-chome, Chiyoda-ku, TOKYO, JAPAN

being the Applicant and Nominated Person, request the grant of a patent for an invention entitled SETTING DEVICE FOR FIRE ALARM SYSTEM which is described in the accompanying standard complete specification.

Keiichi Takahashi and Kazuki Takumi are the actual inventors of the invention.

The nominated person is the assignee of the invention from the inventors.

Convention priority is claimed from the following basic application:

Basic Applicant	Application Number	Application Date	Country	Country Code
Nohmi Bosai Ltd.	6-061763	30 March 1994	Japan	JP

The basic application was the first application made in a Convention country in respect of the invention the subject of this request.

Our address for service is: GRIFFITH HACK & CO
168 WALKER STREET
NORTH SYDNEY NSW 2060

Attorney Code: GH

DATED this 28th day of March 1995

NOHMI BOSAI LTD.
By their Patent Attorney

GRIFFITH HACK & CO

P22700-AF

AU9516176

(12) PATENT ABRIDGMENT (11) Document No. AU-B-16176/95
(19) AUSTRALIAN PATENT OFFICE (10) Acceptance No. 669314

(54) Title
SETTING DEVICE FOR FIRE ALARM SYSTEM

International Patent Classification(s)
(51)[6] G08B 026/00 H04L 029/12 H04Q 009/00

(21) Application No. : 16176/95 (22) Application Date : 29.03.95

(30) Priority Data

(31) Number	(32) Date	(33) Country
6-61763	30.03.94	JP JAPAN

(43) Publication Date : 09.11.95

(44) Publication Date of Accepted Application : 30.05.96

(71) Applicant(s)
NOHMI BOSAI LTD.

(72) Inventor(s)
KEIICHI TAKAHASHI; KAZUKI TAKUMI

(74) Attorney or Agent
GRIFFITH HACK & CO., GPO Box 4164, SYDNEY NSW 2001

(56) Prior Art Documents
AU 561577 22711/83 G08B 29/00 26/00
AU 555669 19682/83 G08B 26/00

(57) Claim

1. A setting device for a fire alarm system comprising:

a terminal device connecting section removably connected to a terminal device of the fire alarm system for transmitting power supply and information signals to the terminal device;

control means connected to the terminal device connecting section for controlling the sending and receiving of information signals to and from the terminal device through transmission means; and

an indicator section connected to the control means for indicating at least information regarding the terminal device; and

an operation section connected to the control means for inputting desired information of the terminal device;

wherein the control means generates a command to the terminal devices to set the desired information from the operation section.

P/00/011
Regulation 3.2

AUSTRALIA

Patents Act 1990

ORIGINAL

COMPLETE SPECIFICATION

STANDARD PATENT

Invention Title: SETTING DEVICE FOR FIRE ALARM SYSTEM

The following statement is a full description of this invention, including the best method of performing it known to us:

GH&CO REF: P22700-AF:DAA:RK

SETTING DEVICE FOR FIRE ALARM SYSTEM

BACKGROUND OF THE INVENTION

Field of the Invention

The present invention relates to a setting device for a fire alarm system, and, more particularly, to a setting device for a fire alarm system excellent for use, in particular, in setting and confirming, for example, the address of a terminal device such as, for example, a fire detector.

Description of the Related Art

Hitherto, in a so-called R-type fire alarm system, a coded signal has been sent to and received from a receiving section such as, for example, a fire receiver and terminal devices, to perform fire monitoring and maintain the normal condition of the system.

In a terminal device such as, for example, a fire detector used in such a fire alarm system, data regarding its type, address, etc. are stored in a storage means of a microcomputer such as an EEPROM. The receiving section specifies a terminal device by a call signal based on the address to send, for example, information regarding condition changes and control commands.

Therefore, in conventional fire alarm system equipment, address data or the like which is set in the terminal device cannot be externally verified even when it is properly set in the storage means such as an EEPROM. For example, in the place where the fire alarm system is installed, address data or the

like set in the terminal device cannot be easily confirmed, thereby making it very difficult to install the terminal device.

There are problems even if the data is visually confirmable with, for example, a dip switch. For example, it is impossible to verify whether or not the control means such as a microcomputer of the terminal device has correctly recognised the data. In addition, it is impossible to change erroneous address data setting or duplicate setting of the terminal device. Further, the user may change the address data inadvertently.

SUMMARY OF THE INVENTION

It is an advantage that in an embodiment the present invention may provide a setting device for a fire alarm system in which address data or the like set in a storage means which cannot be visually observed externally of, for example, the terminal device can be easily verified, and set data can be changed when necessary.

According to a first aspect of the invention, there is provided a setting device for a fire alarm system comprising:

a terminal device connecting section removably connected to a terminal device of the fire alarm system for transmitting power supply and information signals to the terminal device;

control means connected to the terminal device connecting section for controlling the sending and receiving of information signals to and from the terminal device through transmission means; and

an indicator section connected to the control means for indicating at least information regarding the terminal device; and

an operation section connected to the control means for inputting desired information of the terminal device;

wherein the control means generates a command to the terminal devices to set the desired information from the operation section.

AUSTRALIAN PATENT OFFICE ML

With this construction, for example, it is possible to correct erroneous setting or duplicate setting of address information to the terminal device.

Moreover, with such a construction, address information or the like set in the terminal device can be properly and easily verified outside of the terminal device, which allows more effective operation of the device. In addition, even in cases where the data is visually verifiable with, for example, a dip switch, it is possible to verify whether the terminal device has recognised the data correctly, thereby allowing easier maintenance of the terminal device.

In a second aspect of the invention, there is provided a setting device for a fire alarm system, wherein the control means distinguishes between a confirmation mode in which the indicator section indicates information received from the terminal devices and a setting mode in which a setting command is sent to set information input from the operation section at the terminal devices, upon start-up of the system.

With such a construction, the confirmation mode allows even a user inexperienced in handling the terminal device such as,

AUSTRALIAN PATENT OFFICE MV

for example, a fire detector to effectively and accurately confirm address information or the like set in the terminal device, because he does not have to turn on the power supply of the device each time the terminal device is replaced to confirm the data. In addition, since a user, inexperienced in handling the terminal device, cannot change the information of the terminal device due to carelessness, it is safe from the viewpoint of terminal device control, so that it is made more reliable with enhanced quality.

The setting mode allows a user who is relatively used to handling the terminal device such as, for example, a fire detector to set and confirm efficiently and correctly address data or the like of the terminal device because he does not have to turn on the power supply of the device each time the terminal device is replaced for setting and confirming the data.

In a ~~fourth~~ third aspect of the invention, there is provided a setting device for a fire alarm system, wherein a transmitting means comprises a plurality of transmission circuits which can be selectively switched in accordance with the various transmission modes of the terminal devices, and wherein the control means switches the plurality of transmission circuits when necessary.

With such a construction, even when terminal device in different transmission modes are used, they can be matched for use.

Even for differently shaped terminal device, the transmission mode of the terminal device can be automatically selected so as to allow immediate setting and confirmation of

AUSTRALIAN PATENT OFFICE ML

address information or the like of the terminal device.

In a ~~fifth~~ fourth aspect of the invention, there is provided a setting device for a fire alarm system, wherein the control means generates call commands of each transmission to the terminal devices to perform successive transmission based on the transmission modes of the terminal device giving a response.

With such a construction, it is possible to confirm the transmission mode of the terminal device responding to the command and to automatically select the transmission mode. When successive transmissions based on the transmission mode of the terminal device giving a response are performed, reliable setting and confirmation of address information or the like of the terminal device can be realized even when the transmission mode of the terminal device is not known.

In a ~~sixth~~ fifth aspect of the invention, there is provided a setting device for a fire alarm system, wherein the control means sends out all call commands to the terminal device to perform time sharing transmissions based on all transmission modes of the one terminal device.

With such a construction, transmission modes do not need to be selected, so that erroneous selection of transmission modes will not occur.

In a ~~seventh~~ sixth aspect of the invention, there is provided a setting device for a fire alarm system, wherein the indicator section has a plurality of indicating elements in correspondence with required numbers set according to digits to be indicated, wherein which information regarding the terminal device is indicated by the indicator elements which are lit one for each

AUSTRALIAN PATENT OFFICE NV

digit.

With such a construction, an indicating element is constantly lit in accordance for each digit to indicate information regarding terminal device, so that power consumption is reduced compared to that of conventional systems.

In a seventh ~~eighth~~ aspect of the invention, there is provided a setting device for a fire alarm system, wherein terminal device connecting section usually has a first base to which is removably and electrically connectable a usual terminal device, and a second base embedded at an inner side of the first base, to which a second base is removably and electrically connectable a small and different terminal device.

With such a construction, a usual terminal device such as, for example, a typical fire detector and a small and different terminal device such as a small fire detector can both be connected, which results in a smaller construction and reduced costs compared to the usual terminal device.

BRIEF DESCRIPTION OF THE DRAWINGS

Fig. 1 is a structural view of an embodiment of the invention;

Fig. 2a is a perspective view of a common fire detector removed from the base in an embodiment of the invention;

Fig. 2b is a perspective view of a typical fire detector mounted to a base in an embodiment of the invention;

Fig. 3a is a perspective view of a small fire detector removed from the base in an embodiment of the invention;

AUSTRALIAN PATENT OFFICE ML

Fig. 3b is a perspective view of a small fire detector mounted to the base in an embodiment of the invention;

Fig. 4 is a plan view of an operation section in an embodiment of the invention;

Fig. 5 is a flowchart for describing the basic operation of an embodiment of the invention;

Fig. 6 is a flowchart for describing the operational steps to be performed (manual switching method) when the transmission modes of the fire detectors or the like in an embodiment of the invention are different;

Fig. 7 is a flowchart for describing the operational steps to be performed (calling selecting method) when the transmission modes of fire detectors or the like in an embodiment of the invention are different;

Fig. 8 is a flowchart for describing the operational steps to be performed (calling selecting method) when the transmission modes of fire detectors or the like in an embodiment of the invention are different;

Fig. 9 is a flowchart for describing the operational steps to be performed (all-signal transmitting method) when the transmission modes of fire detectors or the like in an embodiment of the invention are different; and

Fig. 10 is a flowchart for describing the operational steps to be performed (all-signal transmitting method) when the transm ssion modes of fire detectors or the like in an embodiment of the invention are different.

DESCRIPTION OF THE PREFERRED EMBODIMENTS

A description will be made below of a setting device of a fire alarm system according to an embodiment of the invention, taking as an example the case when it is applied to a confirming device for setting and confirming the address of a terminal device such as, for example, a fire detector, with reference to the drawings.

Fig. 1 is a structural view of an embodiment of the invention.

Referring to the figure, the address confirming device has a battery 1 comprising four AA dry cells and AC socket 2 connected to an AC adapter (not illustrated). When the AC socket 2 is inserted into a power terminal of the adapter confirming device, a power source change-over switch 3 moves from a contact a connected to the battery 1 to a contact b connected to the AC socket 2.

The address confirming device includes a constant voltage circuit 4 connected to an output end of the switch 3 for stabilizing the source voltage; a microcomputer 5 serving as control means for supplying voltage from constant voltage circuit 4 to carry out various operations; a reset circuit 6 which resets the microcomputer 5 when power is turned on; an operation section 7 having a plurality of pushbutton switches used for sending out various operation information to the microcomputer 5; an indicator section 8 for indicating address codes or the like of the fire detector; a booster circuit 9 for raising the voltage from, for example, 6 volts to 30 voltages to allow operation of the fire detector connected to the outside;

and transmission circuits 10 and 11 to which are applied increased voltage resulting from the action of the booster circuit 9 in which the transmission circuit 10 is, for example, for an analog type fire detector (in which the detection level of the fire detector is transmitted), while the transmission circuit 11 is for an on/off type fire detector (in which a fire is detected to transmit a fire signal).

The address confirming device further comprises a transmission circuit change-over switch 12 provided between the microcomputer 5 and the input sides of the transmission circuits 10 and 11; and a transmission circuit change-over switch 13 provided between the output sides of the transmission circuits 10 and 11 and a fire detector base connected to the outside. Switches 12 and 13 are constructed such that they can be simultaneously switched by means of a control signal from the microcomputer 5.

The address confirming device further comprises a switch 14 provided between the output end of the switch 3 and the booster circuit 9 adapted to be switched between the on and off states by the control signal from the microcomputer 5.

Figs. 2a and 2b and Figs. 3a and 3b illustrates the address confirming device having the above-described circuit configuration, and a fire detector which can be removably mounted thereto. Figs. 2a and 2b illustrate, for example, a typical analog type fire detector 20 and Figs. 3a and 3b illustrate a small on/off type fire detector 21.

The address confirming device 30 further has an upper case 31 and a lower case 32. A recess 33 is formed on the top side

of the upper surface of the upper case 31. A common-type fire detector base 34 and a small fire detector base 35 pr·ided at the inner side of the fixtures used for mounting the detector to this base 34, are mounted to this recess, as those shown in Fig. 4.

Figs. 2a and 3a each illustrate a fire detector removed from the base, while Figs. 2b and 3b each illustrate a fire detector mounted to the base.

Fig. 4 is an enlarged view of the operation section of the address confirming device 30. Referring to the figure, the address confirming device 30 includes an operation indicator section 36 having an operation section 7 and an indicator section 8 corresponding to those of Fig. 1, and a pushbutton type power key 37 which corresponds to the switch 14 of Fig. 1. The power key 37 functions as the switches 12 and 13 shown in Fig. 1. In other words, pressing the power key 37 once, for example, causes the switches 12 and 13 to be moved to a contact a, and pressing the key 37 once again causes the switches 12 and 13 to be moved to a contact b. Pressing it one more time causes the switch 14 to be placed in an off state.

The address confirming device 30 further includes a pushbutton type execution key 38 provided on the operation section 7. Pressing this key 38 completes address setting. The address confirming device 30 further includes "x 1", "x 10", and "x 100" pushbutton digit keys denoted respectively by reference numerals 39 through 41; indicator elements such as, for example, LEDs 42 and 43 for indicating that the analog-type fire detector transmission circuit 10 or the on/off-type fire detector

transmission circuit 11 has been switched, when the switches 12 and 13 have been moved to the contact a or the contact b; indicator element such as, for example, LED 44 for indicating an abnormality in, for example, fire detectors; and indicator elements such as, for example, LEDs 45, for indicating each address value which is written onto, for example, a membrane sheet 46.

Here, as an example, the LEDs 45 corresponding to numbers 0 through 9 are disposed above the part marked "x 1" (units digit), and the LEDs 45 corresponding to numbers 0 through 9 are disposed above the part marked "x 10" (tens digit), and the LEDs 45 corresponding to numbers 0 through 5 are disposed above the part marked "x 100" (hundreds digit). With one LED constantly lit for each digit, a set of three LEDs 45 are always lit to indicate the address. For example, numbers 1 to 510 can be lit to indicate the address.

Accordingly, the desired address can be simply indicated by lighting three LEDs 45 at all times, so the power consumption can be reduced compared to conventional indicating methods. For example in the 7-segment indicating method, six indicator elements need to be lit to indicate the minimum value address "111", while 21 of them need to be lit to indicate the maximum value address "888" (actually cannot be indicated because it falls outside the range). However, in the embodiment, only three need to be lit at all times, so that the power consumption is reduced to 1/2 to 1/7 that in the conventional 7-segment indicating method.

A description will be made of the basic operation of the

confirming device of Fig. 1 with reference to Fig. 5. It is to be noted that in the description, all determinations are made in the microcomputer 5.

In Step S1, for example, the digit key 39 and the source key 37 of Fig. 4 are pressed simultaneously to cause the operation mode to be set in setting mode. In correspondence with the fire detector to be set under the control of the microcomputer 5, the switches 12 and 13 move to either the transmission circuit 10 side or the transmission circuit 11 side and, at the same time, the switch 14 closes causing the power source to be turned on. In Step S2, the microcomputer 5 determines whether the mode is address setting mode or confirmation mode. Since, in this case, the mode is in setting mode, in Step S3, transmission for searching the self address is started. A command is generated to the fire detector to cause it to send its address. This address is received by the microcomputer 5.

In Step S4, the microcomputer 5 determines whether or not the address has been properly sent back. If it has not been properly sent back, in Step S5, the occurrence of a transmission error in that, for example, the fire detector has not yet been connected or that it is broken, will be indicated by an ERROR LED 44 at the indicator section 8. In other words, the LED 44 on the operation indicator section 36 of Fig. 4 will turn on. Thereafter, with the process returned back to Step S4, and the address confirming device waits for the fire detector being properly connected or for it being replaced with a good one.

On the other hand, in Step S4, if the address from the

aforementioned fire detector has been properly sent back, then, in Step S6, this address is indicated at the indicator section 8. In other words, three LEDs 45 on the operation indicator section 36 of Fig. 4 which correspond to the numbers of the address are lit.

In Step S7, the microcomputer 5 determines whether or not there has been input of the address to be set. The address input is done as follows. Digit key 39, 40, or 41 on the operation indicator section 34 of Fig. 4 is pressed. This causes the LED 45 of the lowest row to blink. Pressing it again causes the LED 45 of the second lowest row from the bottom to blink. Repeating the above procedure causes the upper row LED45 to blink successively, so that an LED 45 for each digit blinks to input the address to be set.

If the setting address has not been input in Step S7, the process returns back to Step S4 and the above-described operation is repeated. If the setting address has been input, the process proceeds to Step S8 to determine whether or not the setting has been executed, that is whether or not an execution key 38 of Fig. 4 has been pressed.

If the execution key 38 has not been pressed, with the setting address indicated, the confirming device waits for the execution key 38 to be pressed. If the execution key 38 has been pressed, address setting is completed. The LED 45 which have been blinking are now lit, so that the three LEDs 45 which correspond to the input address values are lit.

In Step S9, the set address is transmitted along with an address setting command, etc. to the corresponding fire detector

to change the address stored in an internally provided storage means such as, for example, an EEPROM. In Step S10, this address, which has been changed and set, is sent back again for confirmation.

In Step S11, the microcomputer 5 determines whether or not the address which has been sent back from the fire detector matches the address set at the address confirming device. If they do match each other, the process returns back to Step S4 and it prepares for the setting of the next fire detector. If, in Step S10, they do not match each other, then, in Step S12, an occurrence of a setting error in which an address change could not be performed is indicated at the indicator section 8. That is, LED 44 of the operation indicator section 36 of Fig. 4 is lit. Thereafter, with the process returned back to Step S4, in Step S7, setting is executed again to change the address.

In Step S1, pressing, for example, the power key 37 alone causes an operation mode to be set in confirmation mode. In correspondence with the fire detector to be set under the control of the microcomputer 5, the switches 12 and 13 move to either the transmission circuit 10 side or to the transmission circuit 11 side, and the switch 14 closes, causing the power source to turn on. In Step S2, the microcomputer 5 determines whether the mode is the address setting mode or confirmation mode. In this case, the mode is confirmation mode, so that as in the aforementioned Steps S3 through S6, first in Step S13, transmission for address searching is started to generate a command so that the fire detector sends its self address. This address is received by the microcomputer 5.

In Step S14, the microcomputer 5 determines whether or not the address has been sent back properly. If it has not been properly sent back, in Step S15, the occurrence of a transmission error (for example, the fire detector has not yet been connected or it is broken) will be indicated at the indicator section 8. In other words, LED 44 of operation indicator section 36 of Fig. 4 will turn on. Thereafter, with the process returned back to Step S14, the address confirming device waits for the fire detector to be properly connected or for it to be replaced by a good one.

In Step S14, if the address has been properly sent back from the aforementioned fire detector, then, in Step S16, this address is indicated at the indicating section 8. In other words, three LEDs 45 of the operation indicator section of Fig. 4 which correspond to the numbers of the address are lit. Then, the process returns back to Step S14 and the device prepares for the confirmation of the next fire detector.

Accordingly, using the setting mode of Steps S1 through S12 allows the confirming device to wait at Step S4 upon completion of address setting and confirmation of one fire detector and prepare for the address setting and confirmation of the next fire detector. Therefore, if the user is relatively used to handling fire detectors or the like, he does not have to turn on again the power of the address confirming device 30 every time the fire detector is replaced. This allows him to efficiently and accurately set and confirm the address of the fire detector.

Using the confirmation mode of Steps S1 and S2, and Steps S13 through S16 allow the confirming device 30 to wait at Step

S14 upon completion of the setting and confirming of the address of a fire detector and to prepare for the address confirmation of the next fire detector. Therefore, even a user who is not used to handling a fire detector or the like will not have to turn on the power source of the address confirming device 30 every time the fire detector is replaced. This allows him to efficiently and accurately confirm the address of the fire detector.

In addition, in this case, a user who is not experienced in handling a fire detector or the like cannot carelessly change the address which has been already set, so that it is safe from the viewpoint of controlling the fire detector.

In this way, using the setting mode and confirmation mode functions allows easy and accurate confirmation from the outside of data regarding, for example, address which, has been set in the storage means in the terminal device interior, which results in more efficient operability.

Even in cases where the data can be confirmed visually with, for example, a dip switch, it is possible to confirm whether or not the control means such as, for example, a microcomputer of a terminal device has properly recognized the data, which results in easier maintenance of the terminal device.

It becomes possible to change erroneous setting or duplicate setting of address data of terminal device. In addition, in confirmation mode, address data or the like previously set cannot be rewritten due to carelessness, so that a more reliable terminal device with enhanced quality is

produced.

A description will be made of the operation steps to be taken when the transmission modes of, for example, fire detectors serving as terminal devices are different, with reference to Figs. 6 through 10.

In an example of a transmission mode in a typical small-scale fire alarm system, the transmission speed is 600 bits/s, the transmission control method used is polling/selecting method, the synchronization method used is start-stop synchronization method, and the communication method is half-duplex communication method. On the other hand, in a transmission mode in a large-scale fire alarm system, the transmission speed is 2400 bits/s, the transmission control method used is cyclic polling method, the synchronization method used is start-stop synchronization method, and the communication method is half-duplex communication method. Large-scaled systems allow pre-transmission of large amounts of data.

In the embodiments below, a description will be made of the three processing methods which may be used when the transmission modes of, for example, fire detectors serving as terminals are different. They are manual switching method in which the transmission mode is switched using a change-over switch; calling selecting method, in which in a plurality of transmission modes, a plurality of calling commands are sent out, with the commands responded to by the terminal device executed; and all-signal sending method in which, when commands regarding, for example, calling commands are sent out, execution is carried out by using all transmission mode commands.

A description will be made of the manual switching method with reference to Fig. 6. Here, determinations are made in the microcomputer 5. In Fig. 6, the same steps as those in Step S5 are given the same reference numerals. In Step S1, pressing simultaneously, for example, the digit key 39 and power key 37 of Fig. 4 causes the operation mode to be set in setting mode. In correspondence with the fire detector to be set under the control of microcomputer 5, the switches 12 and 13 move to either transmission circuit 10 side or transmission circuit 11 side and, at the same time, the switch 14 closes, causing the power to be turned on.

In Step S2, the microcomputer 5 determines whether the mode is address setting mode or confirmation mode. In this case, the mode is setting mode, so that, in Step S21, the transmission method is fixed by the state of the change-over switch (not illustrated). That is, for example, in setting the address of the analog type fire detector, the switches 12 and 13 are fixed to contacts a to interpose the transmission circuit 10 in a transmission system. Thereafter, in Step S3, transmission for address searching is started to generate a command to cause the fire detector to send its self address. This address is received by the microcomputer.

In Step S4, the microcomputer determines whether or not the address has been sent back properly. If it has not been properly sent, then, in Step S5, the occurrence of a transmission error (for example, the fire detector has not yet been connected or it is broken) will be indicated at the indicator section 8. In other words, LED 44 of the operation

indicator section 36 of Fig. 4 will turn on. In Step S22, the microcomputer 5 determines whether or not the change-over switch has been operated. If it has not been operated, the process returns back to Step S4 and the address confirming device waits for the fire detector to be properly connected or for it to be replaced with a good one. If the switch has been operated, then, in Step S23, after switching the transmission method to that which has been selected, the process returns back to Step S4 and the same operations as described above are performed.

If, in Step S4, the address is that of the fire detector, then, in Step S6, this address is indicated at the indicator section 8. In other words, three LEDs 45 of the operation indicator section 36 of Fig. 4 which correspond to the numbers of the address are lit.

Then, in Step S7 the microcomputer 5 determines whether or not the address to be set has been input. The address is input as has been described above.

If the setting address has not been input in Step S7, the process returns back to Step S4 and the above-described operations is repeated. If the setting address has been input, the process proceeds to Step S8 where determination is made as to whether or not the setting has been executed, that is whether or not execution key 38 of Fig. 4 has been pressed.

If the execution key 38 has not been pressed, with the setting address indicated, the confirming device waits for the execution key 38 to be pressed. If the execution key 38 has been pressed, address setting is completed. The LEDs 45 which have been blinking are now lit, so that three LEDs 45 which

correspond to the input address values are lit.

In Step S9, the set address is transmitted along with address setting command, etc. to the corresponding fire detector to change the address stored in an internally provided storage means such as, for example, EEPROM. In Step S10, this address, which has been changed and set, is sent back again for confirmation.

In Step S11, the microcomputer determines whether or not the address which has been sent back matches the address set at the address confirming device. If they do match each other, Steps S22 and S23 are carried out, after which the process returns back to Step S4 where preparation is made for the setting of the next address detector. If they do not match each other in Step S11, then, in Step S12, the occurrence of a setting trouble is indicated at the indicator section 8. That is, the LED 44 of the operation indicator section 36 of Fig. 4 is lit. Thereafter, Steps S22 and S23 are performed, after which the process returns to Step S4.

In Step S1, pressing, for example, the power key 37 of Fig. 4 alone causes operation mode to be set in confirmation mode. In correspondence with the fire detector to be set under the control of the microcomputer 5, the switches 12 and 13 move to either transmission circuit 10 side or transmission circuit 11 side and the switch 14 is closed, causing the power to be turned on. Then, in Step S2, the microcomputer determines whether the mode is address setting mode or confirmation mode. In this case, the mode is confirmation mode, so that as in the above-described Steps S21, S3 through S5, S22, S23, and S6, first in

Step S24, the transmission system is fixed by the state of the change-over switch.

That is, for example, in setting the address of the analog type fire detector, switches 12 and 13 are fixed to contacts a to interpose the transmission circuit 10 in a transmission system. Thereafter, in Step S13, transmission for address searching is started to generate a command to cause the fire detector to send its address. This address is received by the microcomputer 5.

In Step S25, the microcomputer 5 determines whether or not the change-over switch has been operated. If it has not been operated, the process returns back to Step S4 and the confirming device waits for the fire detector to be connected properly or for it to be replaced with a good one. If it has been operated, then, in Step S26 after the transmission method has been switched to the one which has been selected, the process returns back to Step S4 and the same operations as described above are performed. Thereafter, with the process returned back to Step S14, the address confirming device waits for the fire detector to be properly connected or for it to be replaced with a good one.

In Step S14, if the address is that of the fire detector, then, in Step S16, this address is indicated by the indicator section 8. That is, three LEDs 45 of the operation indicator section 36 of Fig. 4 which correspond to the numbers of the address are lit. Then, Steps S25 and s26 are carried out and the process returns back to Step S14 where preparation is made for the confirmation of the next fire detector.

The address setting of, for example, on-off type fire detectors having different transmission modes mentioned above is performed by carrying out the same operations as described above with the switches 12 and 13 fixed to contact a and interposing transmission circuit 11 in transmission system.

Performing the operations according the aforementioned manual switching method and switching the transmission mode with a change-over switch allow fire detectors serving as terminal devices having different transmission modes to be used since the modes can be matched.

A description will be made of the operations which are performed according to the calling selecting method, with reference to Figs. 7 and 8. Here, all determinations are made in the microcomputer 5. In Figs. 7 and 8, the processing steps which are the same as those of Fig. 5 are given the same reference numerals. In addition, a transmission ① represents transmission using the transmission circuit 10, while a transmission ② represents transmission using the transmission circuit 11.

In Step S1 of Fig. 7, pressing, for example, the digit key 39 and power key 37 of Fig. 4 causes the operation mode to be set in setting mode. In correspondence with the fire detector to be set under the control of the microcomputer 5, the switches 12 and 13 switch to either transmission circuit 10 or 11 side, and the switch 14 is closed, causing the power to turn on. Then, in Step S2, the microcomputer 5 determines whether the mode is address setting mode or confirmation mode. In this case, the mode is setting mode so that, in Step S3A, by way of

the transmission ① transmission for address searching is started. A command is generated to cause the fire detector to send its address. This address is received by the microcomputer 5.

In Step S4A, the microcomputer 5 determines whether to not the address has been properly sent back. If it has not been properly sent back, then, in the same way, in Step S3B, by way of the transmission ②, transmission is started for address searching. A command is generated so that the fire detector sends its self address. The address is received by the microcomputer 5.

Thereafter, in Step S4B, the microcomputer 5 determines whether or not the address has been properly sent back. If it has not been properly sent back, then, in Step S5, an occurrence of a transmission error in that, for example, the fire detector has not yet been connected or that it is broken, is indicated by the indicator section 8. In other words, the LED 44 of the operation indicator section 36 of Fig. 4 is lit. Then, the process returns back to Step S3A.

If, in Step S4A, the address has been properly sent back, since the fire detector operates through the transmission ①, the transmission is fixed to the transmission ① in Step 21A. In Step S6, this address is indicated at the indicator section 8. In other words, the three LEDs 45 of the operation display section 36 of Fig. 4 which correspond to the numbers of the address are lit. In the same way, if, in Step S4B, the address has been properly sent back, since the fire detector operates based on the transmission ②, the transmission is fixed to the

transmission ②, in Step S21B. In Step S6, the address is indicated by the indicator section 8. That is, three LEDs 45 of the operation indicator section 36 of Fig. 4 which correspond to the numbers of the address are lit.

In Step S7, the microcomputer 5 determines whether or not there has been an input of the address to be set. This address input is performed as described above.

If, in Step S7, there has not been an input of the setting address, then, the process returns back to Step S3A to repeat the above-described operations. If there has been an input, then the process proceeds to Step S8 to execute the setting. In other words, the microcomputer 5 determines whether or not execution key 38 of Fig. 4 has been pressed.

If the execution key 38 has not been pressed, the address confirming device waits for the execution key 38 to be pressed, with the setting address indicated by the indicator section. If the execution key 38 has been pressed, the address setting is completed. The LEDs 45 which have been blinking until this time are now lit, so that the three LEDs 45 which correspond to the numbers of the address input at this point are lit.

In Step S9, the set address is transmitted along with address setting command, etc. to the corresponding fire detector to change the address stored in an internally provided storage means such as, for example, EEPROM. In Step S10, this address, which has been changed and set, is sent back again for confirmation.

In Step S11, the microcomputer 5 determines whether or not the address which has been sent back from the fire detector

matches the address set at the address confirming device. If they do match each other, the process returns back to Step S3A to prepare for the setting of the next fire detector.

If, in Step S11, the addresses do not match each other, in Step S12, an occurrence of a setting error is indicated by the indicator section 8. In other words, the LED 44 of the operation indicator section 36 of Fig. 4 is lit. Thereafter, the process returns back to Step S3A and preparation is made for the fire detector to be connected properly or for it to be replaced with a new one.

In Step S1, pressing, for example, the power key 37 of Fig. 4 alone causes the operation mode to be set in confirmation mode. In accordance with the fire detector to be set under the control of microcomputer 5, the switches 12 and 13 switch to either the transmission circuit 10 side or transmission circuit 11 side, and the switch 14 closes, causing the power to be turned on. In Step S2, the microcomputer 5 determines whether the mode is address setting mode or confirmation mode. In this case, the mode is confirmation mode, so that as in the above-described Steps 3A through S6, first, in Step S13A of Fig. 8, by way of the transmission 1 transmission for address searching is started. A command is generated to cause the fire detector to send its address. This address is received by the microcomputer 5.

In Step S14A, the microcomputer 5 determines whether or not the address has been sent back properly. If it has not been sent back properly, then, in Step S13B, by way of the transmission ② transmission for address searching is started. A

command is generated to cause the fire detector to sends its address. This address is received by the microcomputer 5.

In Step S14B, the microcomputer 5 determines whether or not the address has been sent back properly. If it has not been sent back properly, then, in Step S15, a transmission error is indicated by the indicator section 8. In other words, the LED 44 of the operation indicator section 36 of Fig. 4 is lit. Then, the process returns back to Step S13A.

If, in Step S14A, the address is that of the fire detector, then, in Step S24A, transmission is fixed to the transmission ①. If, in Step S14B, the address is that of another fire detector, then, in Step S24B, the transmission is fixed to the transmission ②. Thereafter, in either case, in Step S16, the address is indicated by the indicator section 8. In other words, three LEDs 45 of the operation indicator section 36 of Fig. 4 which correspond with the numbers of the address are lit. Then, the process returns back to Step S13A where preparation is made for the confirmation of the next fire detector.

Accordingly, performing the operations in accordance with the above-described calling selecting method and sending out calling commands, in a plurality of transmission modes, allow confirmation of the transmission mode of the terminal device responding to the command and automatic selection of the transmission mode. Therefore, even if the transmission mode of the fire detector is not known, it is possible to carry out address setting and confirmation.

A description will be made of the all-signal sending method, with reference to Figs. 9 and 10. Here, all

determinations are made in the microcomputer 5. In Figs. 9 and 10, the steps which are the same as those of Fig. 5 are given the same reference numerals. Transmission ① represents transmission using the transmission circuit 10, while transmission ② represents transmission using the transmission circuit 11.

In Step S1 of Fig. 9, pressing, for example, the digit key 39 and power key 37 of Fig. 4 simultaneously causes the operation mode to be set in setting mode. In correspondence with the fire detector to be set under the control of microcomputer 5, the switches 12 and 13 switch to either transmission circuit 10 side or transmission circuit 11 side, and the switch 14 is closed, causing the power to be turned on. In Step S2, the microcomputer 5 determines whether the mode is address setting mode or confirmation mode. In this case, the mode is setting mode, so that, in Step S3A, by way of the transmission ① the transmission for address searching is started. A command is generated to cause the fire detector to send its address. The address is received by the microcomputer 5.

In Step S4A, the microcomputer 5 determines whether or not the address has been sent back properly. If it has been sent back properly, then, in Step S6A, this address is indicated by the indicator section 8. That is, three LEDs 45 of the operation indicator section 36 of Fig. 4 which correspond to the numbers of the address are lit. Thereafter, or if the address which has been sent back in Step S4A is not that of the fire detector, in Step S3B, by way of the transmission ② transmission

for address searching is started. A command is generated to cause the fire detector to send its self address. This address is received by the microcomputer 5.

In Step S4B, the microcomputer 5 determines whether or not the address has been properly sent back. If it has been properly sent back, in Step S6B, the address is indicated by the indicator section 8. That is, three LEDs 45 of the operation indicator section 36 of Fig. 4 which correspond to the numbers of the address are lit. Thereafter, or if the address which has been sent back in Step S4B is not that of the fire detector, in Step S31, the microcomputer 5 determines whether or not there has been an address indication. If there has not been an address indication, then, in Step S5, an occurrence of a transmission error is indicated by the indicator section 8. That is, the LED 44 of the operation indicator section 36 of Fig. 4 is lit. Thereafter, the process returns back to Step S4A and the address confirming device waits for the fire detector to be connected properly or for it to be replaced by a good one.

If there has been an address indication in Step S31, then, in Step S7 of Fig. 10, the microcomputer 5 determines whether or not the address to be set has been input. The address is input as described above.

If the setting address has not been input in Step S7, the process returns back to Step S4A and the above-described operations are repeated. If it has been input, the process proceeds to Step S8 and the microcomputer 5 determines whether or not the setting has been executed, that is whether or not the execution key 38 of Fig. 4 has been pressed.

If the execution key 38 has not been pressed, the address confirming device waits for the execution key 38 to be pressed, with the setting address indicated by the indicator section. If the execution key 38 has been pressed, the address setting is completed. The LEDs 45 which have been blinking up to this time are now lit. This means that three LEDs 45 which correspond to the numbers of the address which have been input are now lit.

In Step S9A, the set address along with the address setting command, etc. are transmitted to the corresponding fire detector by way of the transmission ① to change the address which is stored in an internally provided storage means such as, for example, EEPROM. In the same way, in Step S9B, the address to be set is transmitted along with the address setting commands, etc. to the corresponding fire detector by way of the transmission ② to change the address stored in an internally provided storage means, as, for example, EEPROM. In Step S10A, the address which has been changed and set is sent back by way of the transmission ① for confirmation. In the same way in Step S10, the address which has been changed and set is sent back again by way of the transmission ② for confirmation.

In Step S11, the microcomputer 5 determines whether or not the address which has been sent back matches that set at the address confirming device as described above. If they do match each other, the process returns back to Step S4A and the confirming device prepares for the setting of the next fire detector. If they do not match each other in Step S11, then, in Step S12, an occurrence of a setting error is indicated by the indicator section 8. That is, the LED 44 of the operation

indicator section 36 of Fig. 4 is lit. Thereafter, the process returns back to Step S4A and the address confirming device waits for the fire detector to be connected properly or for it to be replaced by a good one.

In Step S1, pressing, for example, the power key 37 of Fig. 4 alone causes the operation mode to be set in confirmation mode. In correspondence with the fire detector to be set under the control of microcomputer 5, the switches 12 and 13 switch to either transmission circuit 10 side or transmission circuit 11 side, and the switch 14 is closed, causing the power to be turned on. In Step S2, the microcomputer 5 determines whether the mode is address setting mode or confirmation mode. In this case, the mode is confirmation mode, so that, as described above, in Step S13A of Fig. 9, by way of the transmission ① transmission for address searching is started. A command is generated to cause the fire detector to send its address. This address is received by the microcomputer 5.

In Step S14A, the microcomputer 5 determines whether or not the address has been properly sent back. If it has been properly sent back, then, in Step S16A, this address is indicated by the indicator section 8. That is, the three LEDs 45 of operation indicator section 36 of Fig. 4 which correspond to the numbers of the address are lit. Thereafter, or if the address which has been sent back in Step S14A is not that of the fire detector, in Step S13B, by way of the transmission ② transmission for address searching is started. A command is generated to cause the fire detector to send its address. This address is received by the microcomputer 5.

In Step S14B, the microcomputer 5 determines whether or not the address has been properly sent back. If it has been properly sent back, then, in Step S16B, this address is indicated by the indicator section 8. That is, the three LEDs 45 of the operation indicator section 36 of Fig. 4 which correspond to the numbers of the address are lit. Thereafter, or if the address that has been sent back in Step S14B is not that of the fire detector, in Step S32, the microcomputer 5 determines whether or not the address has been indicated. If it has not been indicated, then, in Step S15, an occurrence of a transmission error is indicated by the indicator section 8. That is, the LED 44 of the operation indicator section 36 of Fig. 4 is lit. Thereafter, when the operation in Step S15 has been completed, or, if the address has been indicated in Step S32, the process returns back to Step S14A and the address confirming device prepares for the confirmation of the next fire detector.

Accordingly, by processing carried out in accordance with the all-signal sending method, using all of the transmission modes when calling commands or the like are sent out it is not necessary to select the transmission mode, so that incorrect selection of transmission modes will not occur.

In this embodiment, switching the transmission mode with a change-over switch allows use of a fire detector serving as a terminal device having different transmission modes to be used by matching the modes, so that sending out calling commands, in a plurality of modes, allows confirmation of the transmission mode of the terminal device responding to the command and

automatic selection of the transmission mode. Even if the transmission mode of the fire detector is not known, it is possible to perform address setting and confirmation. Using all the transmission mode commands when calling commands or the like are sent out makes it unnecessary to select the transmission mode, which eliminates the problem of erroneous transmission mode selection. Therefore, even when, in particular, the external appearances of terminal devices are the same, it is possible to immediately perform without delay address setting and confirmation of each terminal device such as, for example, a fire detector.

Even in this case, upon completion of address setting and confirmation of a fire detector by the use of the above-described setting mode, the confirming device is allowed to wait at the time the address is checked (Step S4, etc.), so that it can prepare for the address setting and confirmation of the next fire detector. Therefore, a user who is not experienced or skilled in handling the fire detector does not need to turn on the power of the address confirming device 30 each time the fire detector is replaced. This allows him to set and confirm the address of the fire detector efficiently and accurately.

Upon completion of address setting and confirmation of a fire detector by the use of the above-described setting mode, the confirming device is allowed to wait at Step S14A, so that it can prepare for the address setting and confirmation of the next fire detector. Therefore, even if the user is not experienced or skilled in handling the fire detector or the like, he does not have to turn on the power of address

confirming device 30 each time the fire detector is replaced. This allows him to confirm the address of the fire detector efficiently and accurately. In addition, in this case the unexperienced user cannot carelessly change the address which has already been set, so that it is safe from the viewpoint of fire detector control.

In the above-described embodiment, switch 14 functions as an auto-power off switch which automatically turns off under the control of microcomputer 5 after a predetermined time has elapsed.

In addition, in the above described embodiment, a description has been made in the case the address is indicated by three digits. However, the invention is not limited thereto and the address may be indicated by any number of digits. In this case, the invention is applicable in the same way.

Further, in the above-described embodiment, a description has been made in the case the address of a fire detector serving as a terminal device is indicated. However, the invention is applicable in the case when other information regarding the terminal device, such as, for example, the different types of fire detectors are indicated. In this case, the same effects are produced.

THE CLAIMS DEFINING THE INVENTION ARE AS FOLLOWS:

1. A setting device for a fire alarm system comprising:

a terminal device connecting section removably connected to a terminal device of the fire alarm system for transmitting power supply and information signals to the terminal device;

control means connected to the terminal device connecting section for controlling the sending and receiving of information signals to and from the terminal device through transmission means; and

an indicator section connected to the control means for indicating at least information regarding the terminal device; and

an operation section connected to the control means for inputting desired information of the terminal device;

wherein the control means generates a command to the terminal devices to set the desired information from the operation section.

2. A setting device for a fire alarm system according to Claim 1, wherein said control means judges between a confirmation mode in which the indicator section indicates information received from the terminal device and a setting mode in which a setting command is sent to set information input from the operation section at the terminal device, upon start-up of the system.

3. A setting device for a fire alarm system according to Claim 1, wherein the transmitting means comprises a plurality of transmission circuits which can be selectively switched in accordance with the various transmission modes of the terminal device, and wherein the control means switches the plurality of transmission circuits when necessary.

4. A setting device for a fire alarm system

AUSTRALIAN PATENT OFFICE

according to Claim 1, wherein the control means generates call commands to the terminal device to perform uccessive transmission based on a particular one of the various transmission modes of the terminal devices giving a response.

5. A setting device for a fire alarm system according to Claim 1, wherein the control means sends out all call commands to the terminal device to perform time sharing transmissions based on all transmission modes of the terminal device.

6. A setting device for a fire alarm system according to Claim 1, wherein the indicator section has a plurality of indicating elements in correspondence with required numbers set according to digits to be indicated, wherein information regarding the terminal devices is indicated by the indicating elements which are lit one for each digit.

7. A setting device for a fire alarm system according to Claim 1, wherein the terminal device connecting section has a first base to which is removably and electrically connectable a terminal device, and a second base embedded at an inner side of the first base, to which the second base is removably and electrically connectable a small and different terminal device.

8. A setting device for a fire alarm system substantially as herein described with reference to any one of figures 1 to 10 of the accompanying drawings.

Dated this 14th day of March 1996

NOHMI BOSAI LTD.

By their Patent Attorneys

GRIFFITH HACK & CO

AUSTRALIAN PATENT OFFICE ML

ABSTRACT OF THE DISCLOSURE

A portable fire alarm system setting device allows not only easy confirmation of such information as address information set in a storage element which cannot be seen visually from the outside of a terminal device such as, for example, a fire detector, but also the set information to be changed when necessary.

The setting device for the fire alarm system comprises bases 33 and 34 for transmitting power and information signals regarding, for example, address to the fire detector, the bases having removably connected thereto fire detectors 20 and 21 for the fire alarm system; a microcomputer 5 having a confirmation mode and a setting mode for controlling the sending and receiving of, for example, address information signals to and from the fire detector through transmission circuits 10 and 11; an indicator section 8 connected to the microcomputer 5 for indicating the fire detector address; and an operation section 7 used to send out address as operation information to the fire detector.

16/76/95

FIG. 1

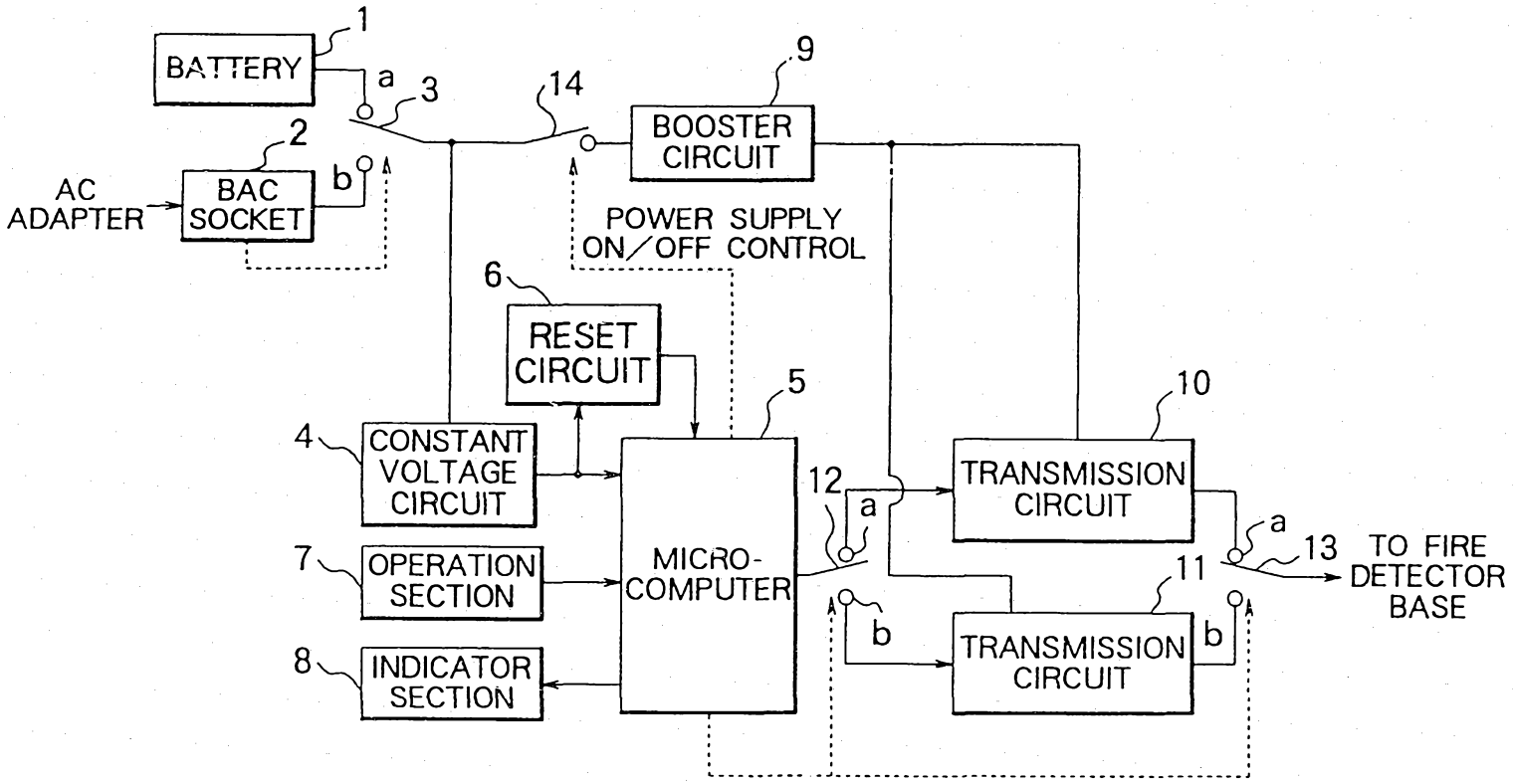
BATTERY
1
a
3
14
9
BOOSTER CIRCUIT
2
AC ADAPTER
BAC SOCKET
b
POWER SUPPLY ON/OFF CONTROL
6
RESET CIRCUIT
5
10
4
CONSTANT VOLTAGE CIRCUIT
12
a
TRANSMISSION CIRCUIT
a
13
TO FIRE DETECTOR BASE
7
OPERATION SECTION
MICRO-COMPUTER
11
b
TRANSMISSION CIRCUIT
b
8
INDICATOR SECTION

FIG. 2(a)

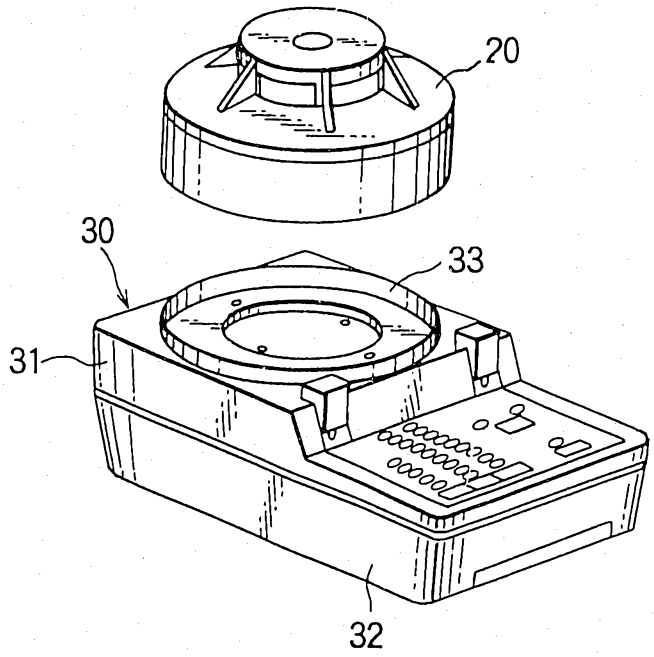

FIG. 2(b)

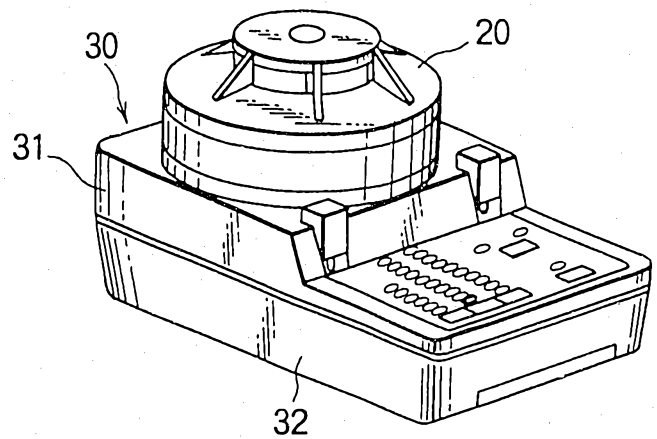

20 : COMMON-TYPE FIRE DETECTOR
21 : SMALL FIRE DETECTOR
30 : ADDRESS CONFIRMING DEVICE

FIG. 3(a)

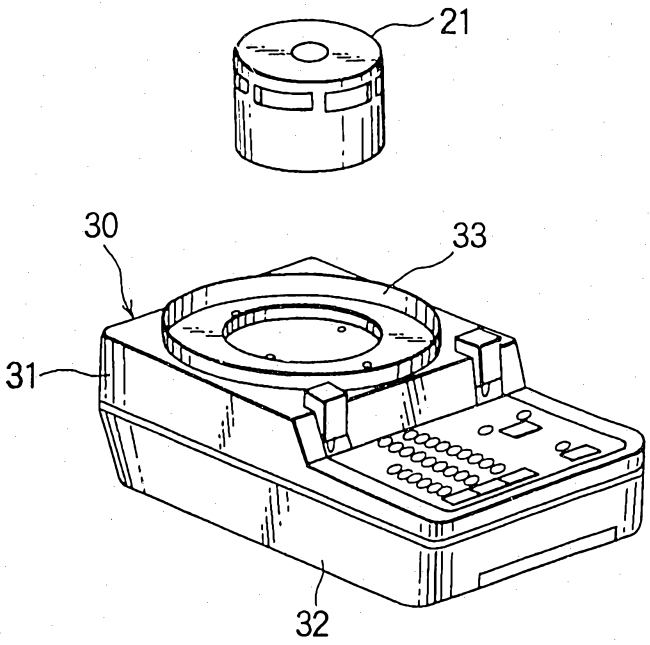

FIG. 3(b)

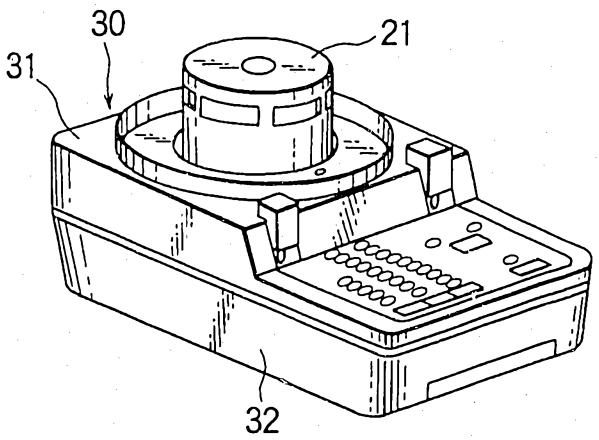

FIG. 4

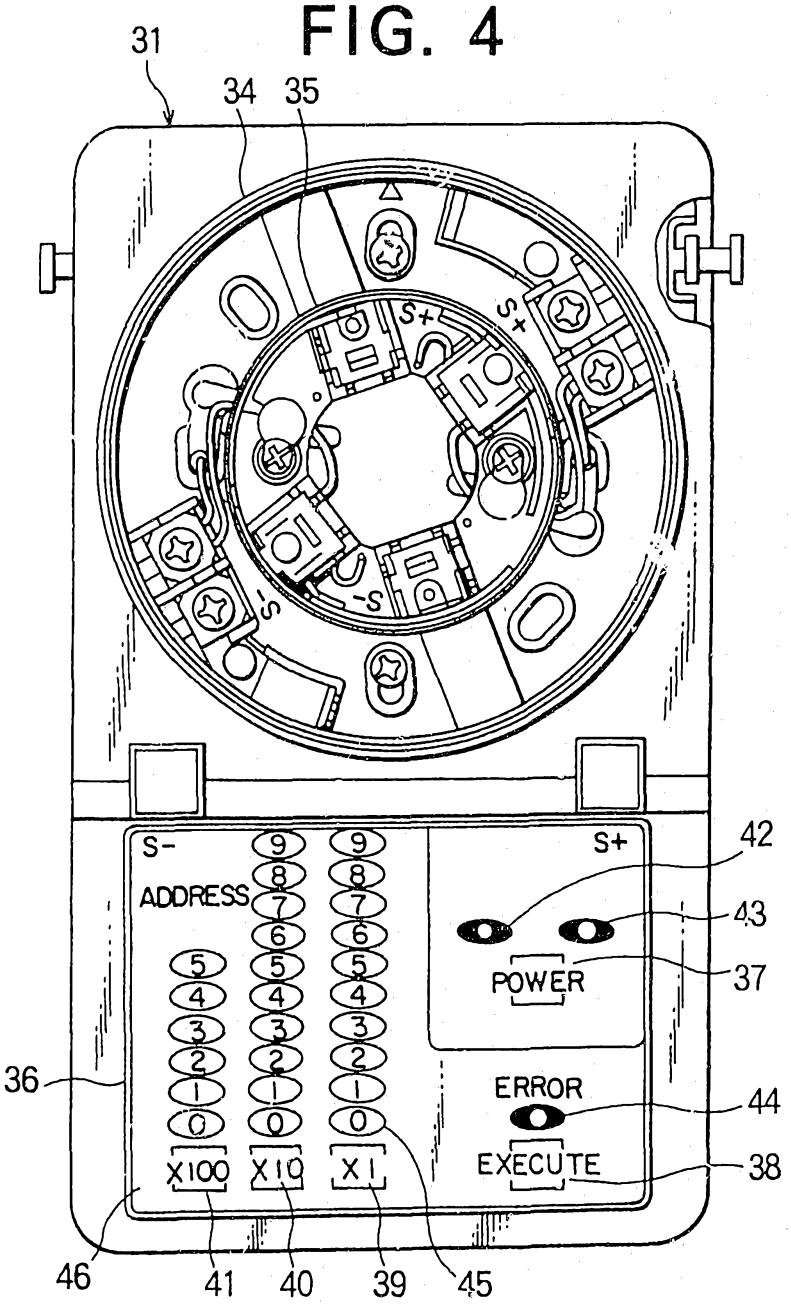

36 : OPERATION INDICATOR SECTION
37 : POWER KEY
38 : EXECUTION KEY
39~41 : DIGIT KEY
42~45 : LED

16176/95

FIG. 5

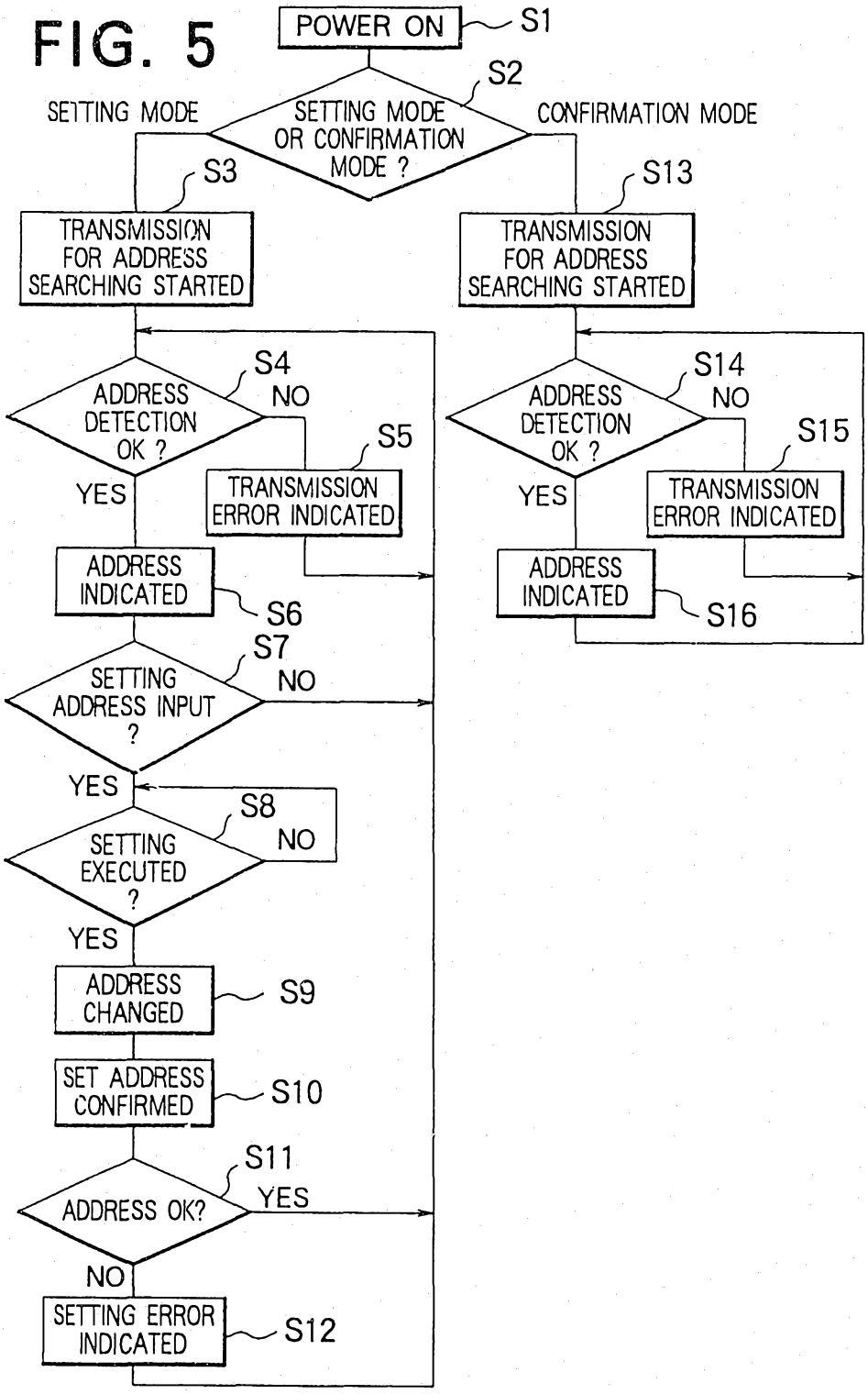

FIG. 6

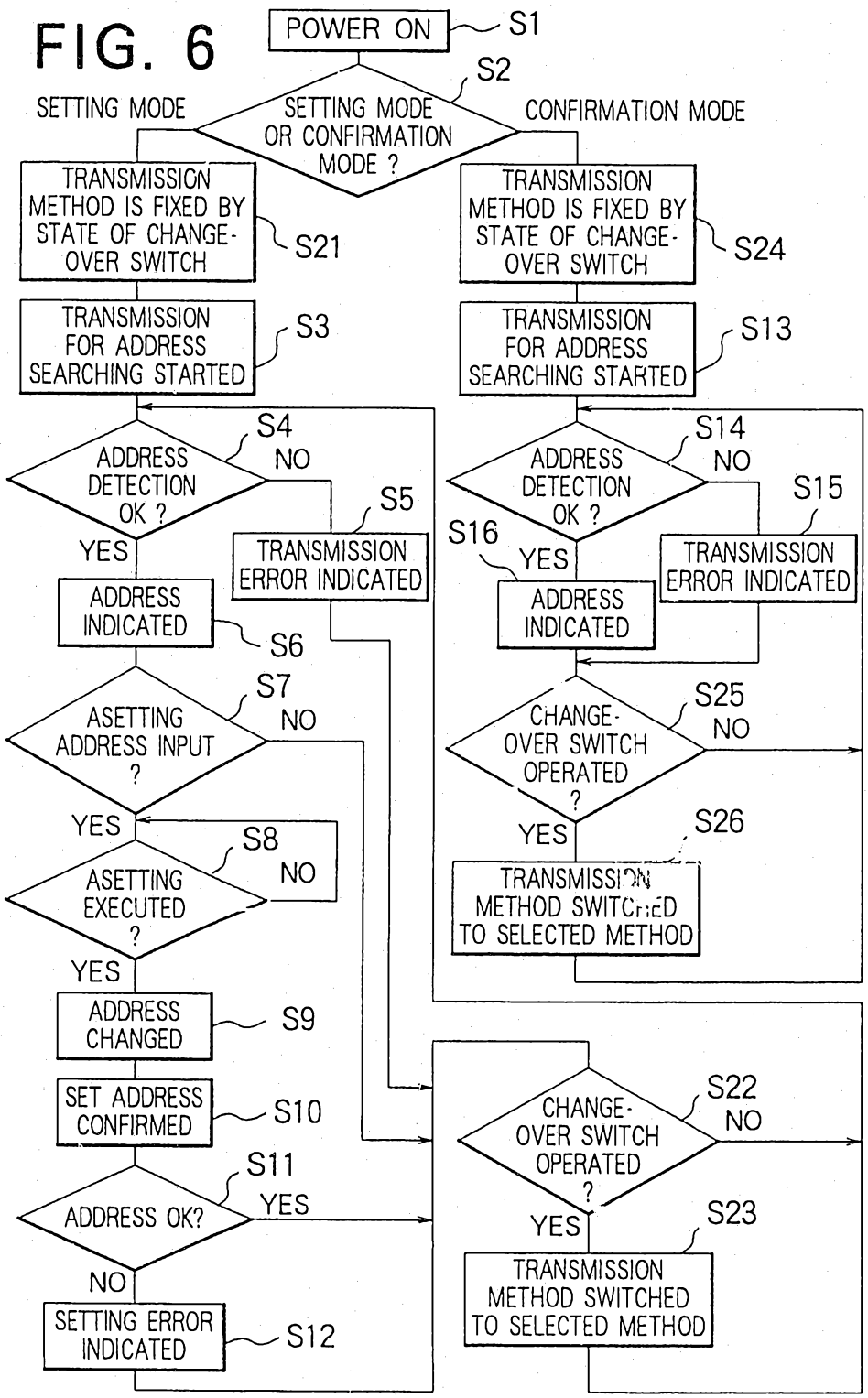
POWER ON
S1
S2
SETTING MODE OR CONFIRMATION MODE ?
SETTING MODE
CONFIRMATION MODE
TRANSMISSION METHOD IS FIXED BY STATE OF CHANGE-OVER SWITCH
S21
TRANSMISSION METHOD IS FIXED BY STATE OF CHANGE-OVER SWITCH
S24
TRANSMISSION FOR ADDRESS SEARCHING STARTED
S3
TRANSMISSION FOR ADDRESS SEARCHING STARTED
S13
ADDRESS DETECTION OK ?
S4
NO
YES
TRANSMISSION ERROR INDICATED
S5
ADDRESS INDICATED
S6
ADDRESS DETECTION OK ?
S14
NO
S15
S16
YES
TRANSMISSION ERROR INDICATED
ADDRESS INDICATED
ASETTING ADDRESS INPUT ?
S7
NO
YES
ASETTING EXECUTED ?
S8
NO
YES
ADDRESS CHANGED
S9
SET ADDRESS CONFIRMED
S10
ADDRESS OK?
S11
YES
NO
SETTING ERROR INDICATED
S12
CHANGE-OVER SWITCH OPERATED ?
S25
NO
YES
S26
TRANSMISSION METHOD SWITCHED TO SELECTED METHOD
CHANGE-OVER SWITCH OPERATED ?
S22
NO
YES
S23
TRANSMISSION METHOD SWITCHED TO SELECTED METHOD

FIG. 7

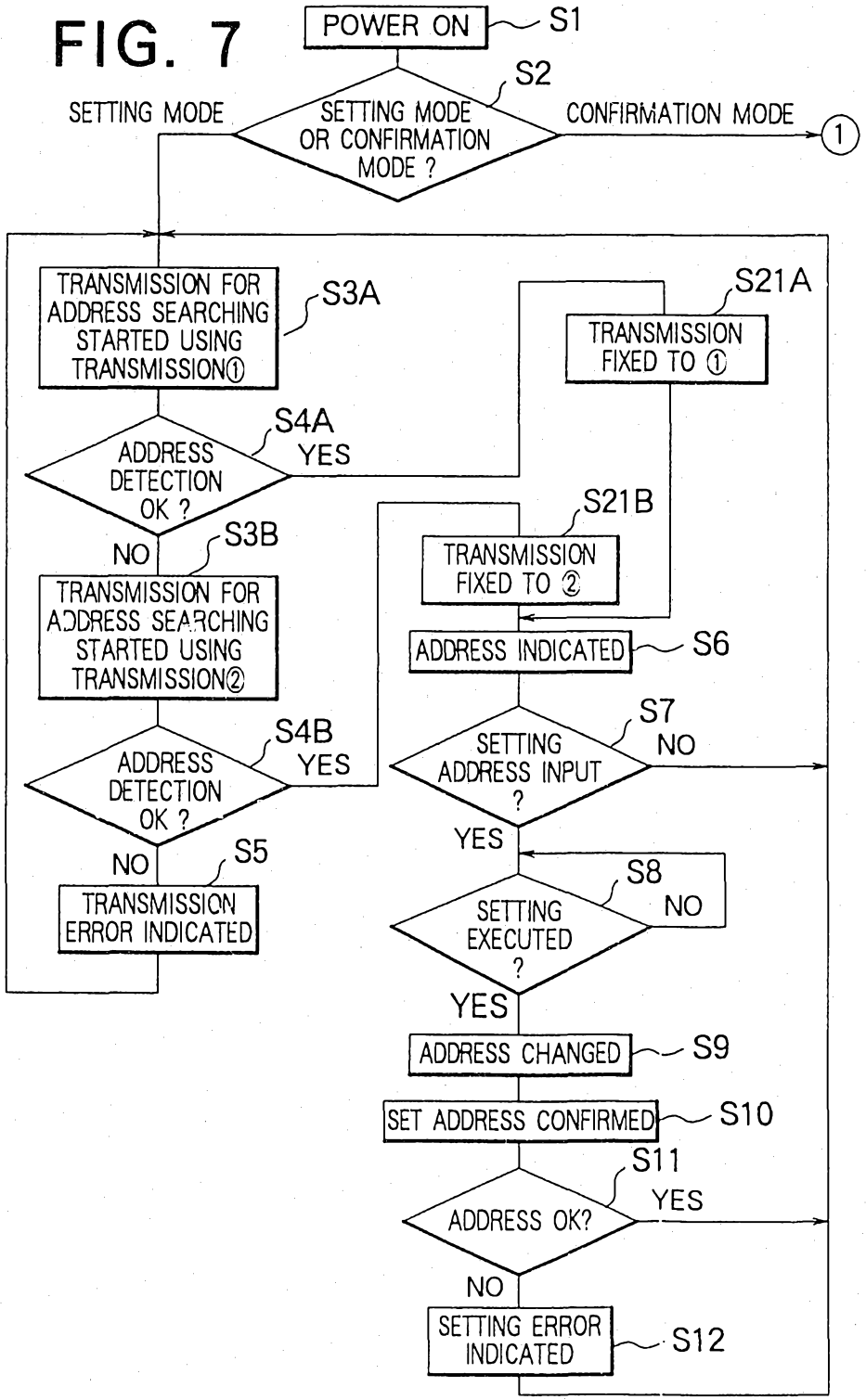
POWER ON
S1
S2
SETTING MODE
SETTING MODE OR CONFIRMATION MODE ?
CONFIRMATION MODE
1
TRANSMISSION FOR ADDRESS SEARCHING STARTED USING TRANSMISSION①
S3A
S21A
TRANSMISSION FIXED TO ①
S4A
ADDRESS DETECTION OK ?
YES
NO
S3B
S21B
TRANSMISSION FIXED TO ②
TRANSMISSION FOR ADDRESS SEARCHING STARTED USING TRANSMISSION②
ADDRESS INDICATED
S6
S7
S4B
ADDRESS DETECTION OK ?
YES
SETTING ADDRESS INPUT ?
NO
YES
S5
NO
S8
TRANSMISSION ERROR INDICATED
SETTING EXECUTED ?
NO
YES
ADDRESS CHANGED
S9
SET ADDRESS CONFIRMED
S10
S11
ADDRESS OK?
YES
NO
SETTING ERROR INDICATED
S12

FIG. 8

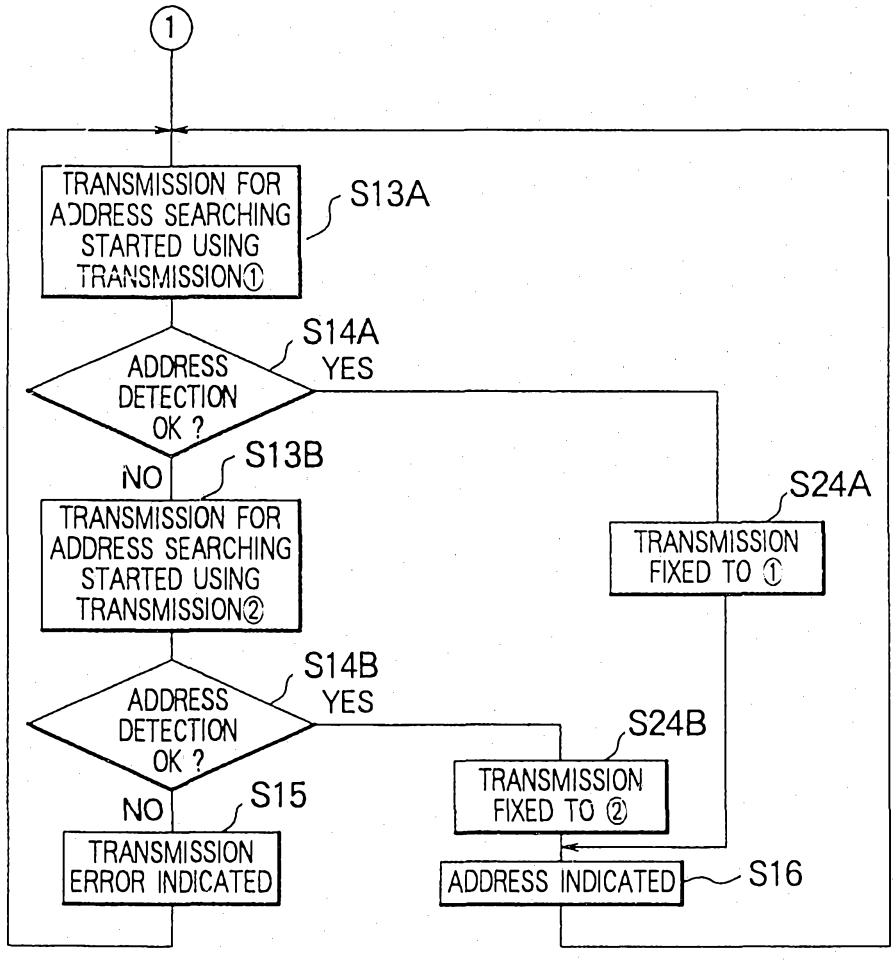
1
TRANSMISSION FOR ADDRESS SEARCHING STARTED USING TRANSMISSION①
S13A
ADDRESS DETECTION OK ?
S14A
YES
NO
S13B
TRANSMISSION FOR ADDRESS SEARCHING STARTED USING TRANSMISSION②
S24A
TRANSMISSION FIXED TO ①
ADDRESS DETECTION OK ?
S14B
YES
S24B
TRANSMISSION FIXED TO ②
NO
S15
TRANSMISSION ERROR INDICATED
ADDRESS INDICATED
S16

FIG. 9

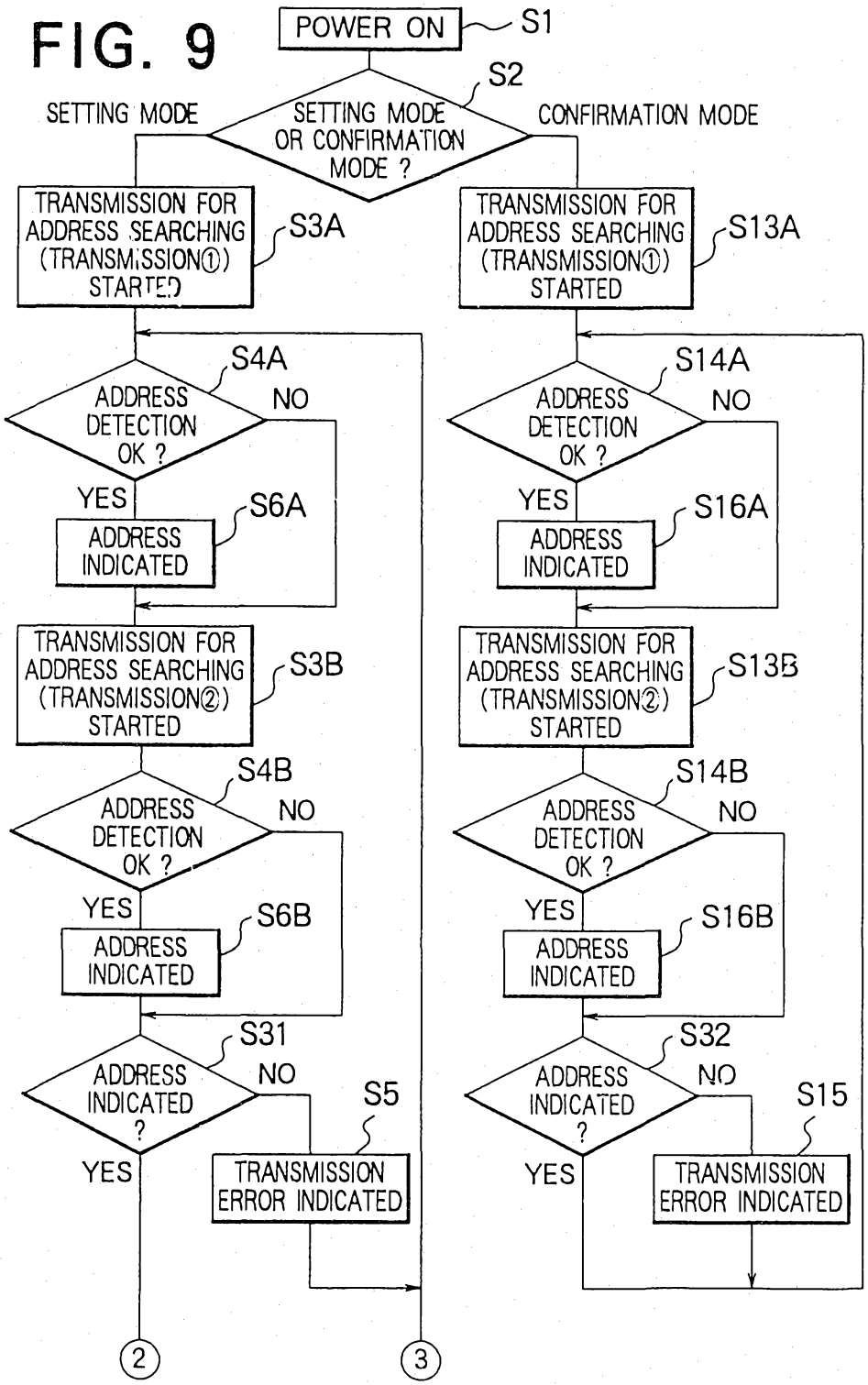
POWER ON
S1
S2
SETTING MODE OR CONFIRMATION MODE ?
SETTING MODE
CONFIRMATION MODE
TRANSMISSION FOR ADDRESS SEARCHING (TRANSMISSION①) STARTED
S3A
TRANSMISSION FOR ADDRESS SEARCHING (TRANSMISSION①) STARTED
S13A
ADDRESS DETECTION OK ?
S4A
NO
YES
ADDRESS INDICATED
S6A
ADDRESS DETECTION OK ?
S14A
NO
YES
ADDRESS INDICATED
S16A
TRANSMISSION FOR ADDRESS SEARCHING (TRANSMISSION②) STARTED
S3B
TRANSMISSION FOR ADDRESS SEARCHING (TRANSMISSION②) STARTED
S13B
ADDRESS DETECTION OK ?
S4B
NO
YES
ADDRESS INDICATED
S6B
ADDRESS DETECTION OK ?
S14B
NO
YES
ADDRESS INDICATED
S16B
ADDRESS INDICATED ?
S31
NO
YES
TRANSMISSION ERROR INDICATED
S5
ADDRESS INDICATED ?
S32
NO
YES
TRANSMISSION ERROR INDICATED
S15
2
3

FIG. 10

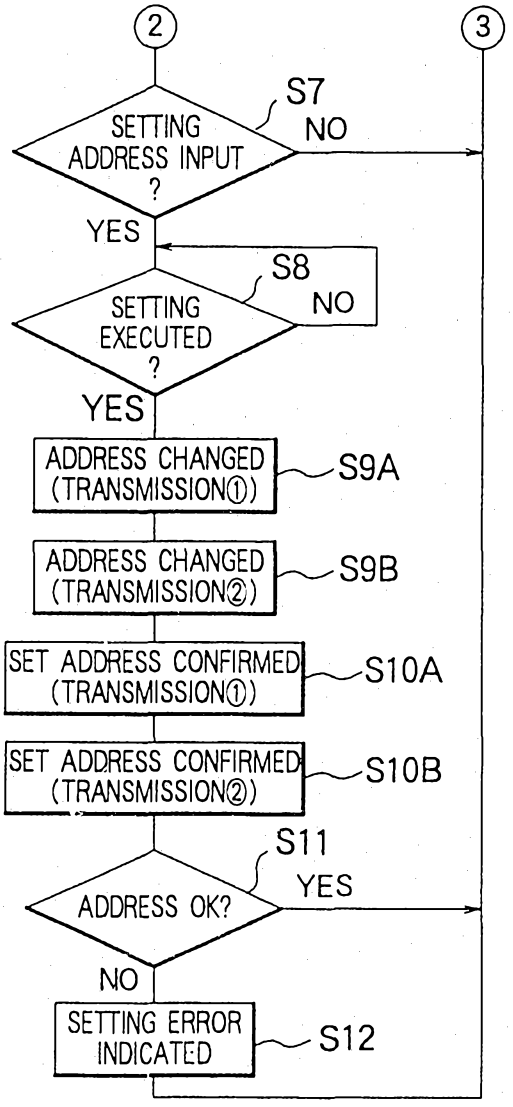
2
3
S7
SETTING ADDRESS INPUT ?
NO
YES
S8
SETTING EXECUTED ?
NO
YES
ADDRESS CHANGED (TRANSMISSION①)
S9A
ADDRESS CHANGED (TRANSMISSION②)
S9B
SET ADDRESS CONFIRMED (TRANSMISSION①)
S10A
SET ADDRESS CONFIRMED (TRANSMISSION②)
S10B
S11
ADDRESS OK?
YES
NO
SETTING ERROR INDICATED
S12