Sept. 23, 1947. E. A. SCHACHINGER 2,427,814

COMBINATION CHANGING LOCK

Original Filed Oct. 21, 1941

Fig. 1

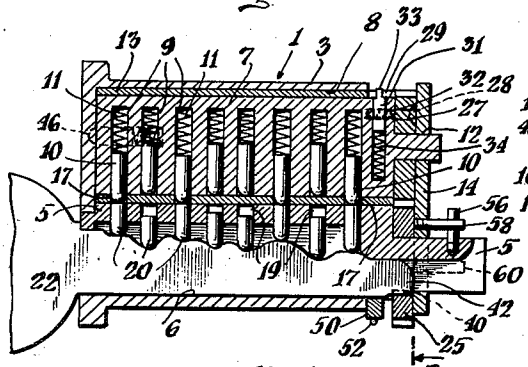

Fig. 2

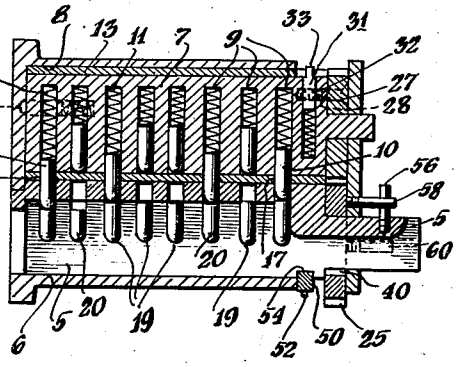

Fig. 3

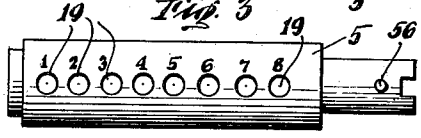

Fig. 4

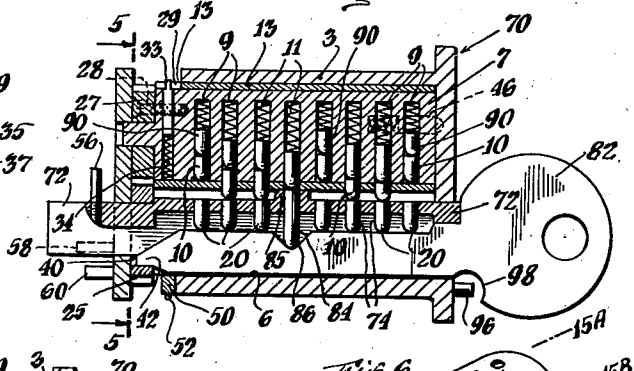

Fig. 5

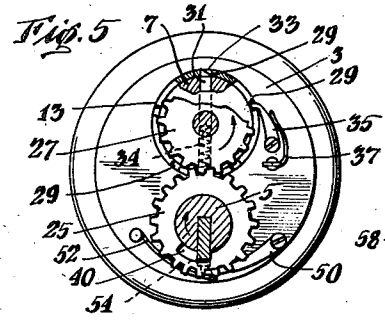

Fig. 8

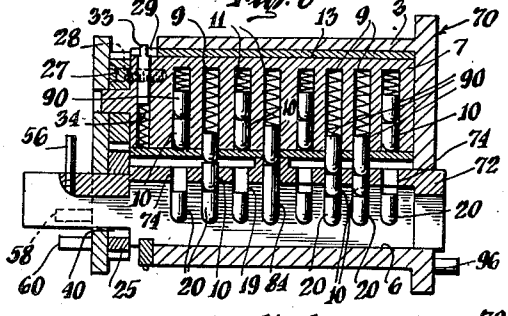

Fig. 6

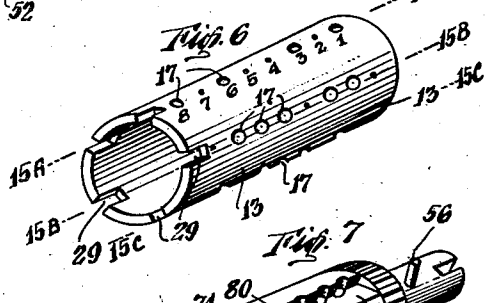

Fig. 9

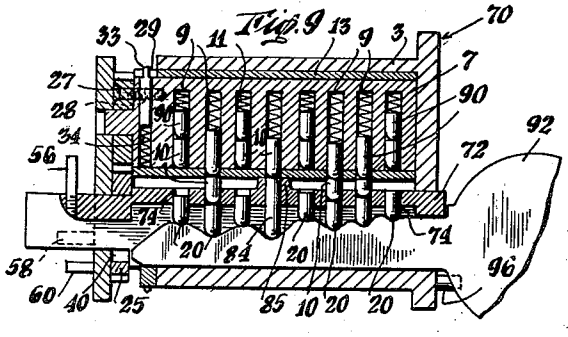

Fig. 7

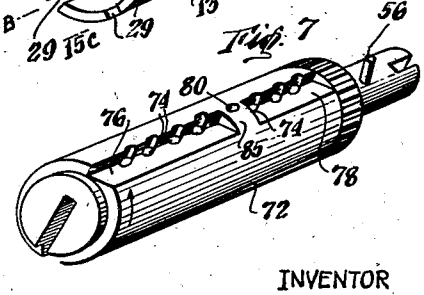

INVENTOR

Edward A. Schachinger

BY George H. Corey

ATTORNEY

Patented Sept. 23, 1947

2,427,814

UNITED STATES PATENT OFFICE

2,427,814

COMBINATION CHANGING LOCK

Edward A. Schachinger, Flushing, N. Y.

Original application October 21, 1941, Serial No. 415,683. Divided and this application May 17, 1945, Serial No. 594,231

21 Claims. (Cl. 70—383)

1

This invention relates to combination locks and particularly to such locks in which the combination may be changed to require different keys for the operation of the lock.

The invention especially relates to such combination changing locks that may be used for watchman's signalling systems for the purpose of requiring the watchman to make his tour of a series of stations in a predetermined order and correctly to operate the stations to transmit signals to a central or supervising station.

It is an object of the invention to provide a lock in which in each operation of the lock the combination is changed so as to require a different key for the next operation of the lock.

It is another object of the invention to provide a lock in which with the proper key the combination will be changed as intended in the normal operation of the lock and in which, if a different key is used, change of the combination will be prevented, with the result that in the next attempted operation of the lock intended to be effected by a different key of particular form for said operation the lock will fail to operate.

It is a further object of the invention to provide a lock in which the combination may be changed to any one of a plurality of combinations by means of a master key without disassembling the lock.

It is a still further object of the invention to provide a lock in which the combination may be changed as above mentioned and of such construction that it readily may be contained within and connected to the operating parts of a signalling station of a watchman's signalling system to operate said parts upon the operation of the lock.

It is a feature of the invention that, in a combination lock having a plurality of pin tumblers engageable by a key inserted in the keyway of the lock, a combination determining element associated with the pin tumbler magazine is utilized which is movable to a plurality of combination determining positions, movement of said element from one position to another being effected by means operatively connecting the element to the keyway shaft or key plug in which the keyway is formed. The combination determining element may be in the form of a sleeve extending about or surrounding a core which constitutes the tumbler magazine containing the tumbler pins of the lock, this sleeve being separate from and movable relative to the keyway shaft. The operative connection between the keyway shaft and the sleeve is so constructed and arranged that

2

the lock may be operated by rotating the keyway shaft by means of the key in the ordinary operation of the lock and thereafter the key and the keyway shaft may be reversely rotated to its original position in the usual manner, the change in the combination being effected in these operations. In such movement of the key and key way shaft, the sleeve is moved relative to the core to a new combination determining position with respect to the pin tumblers, this being also a new position with respect to the keyway shaft. This arrangement and this relation of the parts makes it possible to apply the invention in a lock of the usual pin tumbler and key plug construction.

The pin tumbler magazine may be in the form of a cylinder surrounded by a cylindrical sleeve in the manner described in my U. S. Patent No. 1,967,042, dated July 17, 1934. This sleeve is provided with a plurality of rows of apertures extending along the length of the sleeve, the several apertures in each row each being in a plane extending transverse to the axis of the sleeve and core through a pin tumbler. The arrangement, and, if desired, the number, of the apertures in each row is different from that of the other rows so that a different set of the pin tumblers is retained in the magazine by the sleeve and prevented from passing through the apertures for engagement with the key in each position of the sleeve while those which effect locking project through other apertures of the sleeve.

For the purposes of the invention the keyway shaft or key plug may be provided with pinways into which the pin tumblers extending through the combination determining apertures of the sleeve which register with said pinways may enter for engagement with the key. In the preferred form of the invention, additional pins are placed in these pinways of the keyway shaft to engage the key and act as intermediary members properly to position the pin tumblers of the respective combinations for unlocking operation of the lock. In one embodiment of the invention shown in the drawing the keyway shaft may be so formed in relation to the pins therewithin that with a master key initial movement of the keyway shaft in the operation of the lock may take place to bring all the tumbler pins which project through the sleeve to unlocking position and thereafter movement of the combination determining element may be effected to change the combination. In this embodiment of the invention the tumbler magazine provides a plurality of combinations which may be selected by

operation of the lock with the combination changing master key. The ordinary actuation of the lock will be effected by a key suitable for the set combination without change in the combination.

It is a further feature of the invention that means are provided for retaining the tumbler combination element or sleeve in the position to which it is advanced in the operation of the lock when the key and the keyway shaft are returned to their initial position in the ordinary manner of operating such a lock, thus to maintain the lock in the setting of the new combination.

It is also a feature of the invention that the key itself may form part of the means for establishing the operative connection between the keyway shaft and the tumbler combination determining element or sleeve for changing the combination. The combination, therefore, may not be changed without the use of a proper key.

The locks of the invention are particularly suitable for use in the several signalling or tour stations of watchman's signalling systems wherein it is desired to prescribe the watchman's route or tour by setting the order of visiting the stations, or where it is desirable or requisite that the combination requiring a different key be changeable at will in one or more of the locks of the various stations in order to circumvent fraud or tampering or to overcome negligence and loss or theft of keys.

The lock of the invention in which automatic change of the combination is accomplished in each operation of the lock requiring a different key for the next operation thereof is particularly adaptable to systems of this type for the purpose of insuring that the watchman makes his tour of the stations of the system along a predetermined route and that he operates the stations in the desired predetermined order. This is accomplished by arranging the route in accordance with the succession of combinations as determined by the combination determining element or sleeve. That is to say, the locks of the several stations initially are set so that the order of the combinations of the locks, as the watchman proceeds along his route to the successive stations, is that of the combinations embodied in the combination determining element. This succession, therefore, may be the succession established by the arrangements of the apertures in the successive rows of apertures in said element or sleeve. Each of the stations successively visited thus will require a different key for its operation and the keys must be used in the proper order. The lock of this automatic combination changing form may be used in the stations of the watchman's system described in my copending application Serial No. 415,863, filed October 21, 1941, now Patent No. 2,376,389, dated May 22, 1945, of which this present application is a division, with the advantages set forth in said copending application.

In utilizing in a watchman's system, and particularly in the system described in said copending application Serial No. 415,863, the embodiment of the invention in which the lock is of the multiple combination type wherein the tumbler combination can only be changed by a combination changing master key, only one regular operating key is used by the watchman. Since, however, there are a large number of combinations available as determined by the apertured sleeve, whenever desired the superintendent or other authorized person may actuate the lock of each station with the combination changing master key to a new combination which may be the same

for all of the stations and thus require a new operating key but only a single key or may be different for different stations, the locks of one or more stations being set to the same or a different combination from the previous setting. Any previously prescribed keys or succession of keys, therefore, will be of no avail for correct operation of the system.

The locks of the invention are suitable for other uses, for example, in safes, lockers and other applications where, in order to prevent successful tampering, the combination may be changed in each operation of the lock. For doors of apartments and public buildings and offices where it is desirable, for example, to prevent operation of the lock by means of an unreturned key which has been given to a previous tenant or office worker the multiple combination form utilizing a master key for changing the combination is particularly suitable.

Other objects and features of the invention will appear from the description to follow of the drawings in which:

Fig. 1 is a vertical sectional view of an automatic key combination changing lock shown with an operating key inserted therein;

Fig. 2 is a vertical sectional view of the lock shown in Fig. 1 with the key removed and the lock locked;

Fig. 3 is a plan view of the keyway shaft of the lock shown in Figs. 1 and 2;

Fig. 4 is a vertical sectional view of another form of multiple combination lock in which a master key is used to change the combination;

Fig. 5 is a vertical sectional view taken substantially along line **55** of Fig. 1; also of Fig. 4;

Fig. 6 is a perspective view of a combination changing sleeve of the locks shown in Figs. 1 to 5;

Fig. 7 is a perspective view of the keyway shaft used in the lock shown in Fig. 4;

Fig. 8 is a view of the lock shown in Fig. 4 with the key removed and in a combination to which it has been changed by operation of the master key in Fig. 4;

Fig. 9 is the same view as Fig. 8 with a regular operating key shown in the lock.

In Figs. 1, 2, 3, 5 and 6 of the drawings, an automatic combination lock **1** is disclosed which among other uses is particularly suitable for the transmitter station or the preliminary stations of a watchman's signalling system so as to require the watchman to make his routine trips to the several stations in a predetermined sequence as hereinbefore mentioned. The automatic lock comprises a barrel **3** within which are mounted respectively in bores **6** and **8** the keyway shaft **5** and a pin tumbler magazine **7** of the lock. The magazine **7** has a row of sockets **9** each containing a pin **10** and a spring **11**. Surrounding the magazine **7** and rotatably fitting thereto and to the bore **8** is a combination changing sleeve **13** which is provided with a plurality of longitudinal rows **15** of apertures **17** (Fig. 6). Each aperture **17** is circumferentially in line with a pin tumbler **10**. The lock as illustrated has eight pin tumblers. There are, therefore, eight circumferential lines, as indicated by the numerals **1** to **8** inclusive in Fig. 6, upon which apertures **17** may fall. In other words, there are eight aperture positions along each longitudinal line of apertures in the sleeve **13**, any combination of which may be employed to form any given row **15** of apertures cooperating with corresponding pins **10**. The number of rows **15** is limited only by the

circumference of the sleeve 13 and the size of the apertures 17 necessary for pins of practical size.

The particular sleeve shown in Fig. 6 is formed with five rows 15 thus providing five different tumbler combinations requiring five different keys for operating the lock. Sleeves with a lesser or greater number of rows 15 may be provided and when the lock is used for a watchman's signalling system the sleeve may be provided with as many rows 15 of apertures 17 as there are stations. In large systems, however, the same combination may be used for more than one station since it is possible to provide the sleeve with, say, ten or more rows of apertures and such repeated use will not interfere with the arrangement of the locks in a predetermined order of operation along the watchman's route according to the succession of combinations determined by the sleeve.

Any desired number of pin tumblers may be employed as in ordinary locks, a set of eight pin tumblers being shown and described for purpose of illustration. The keyway shaft 5 is provided with a row of eight pinways 19 in which are disposed a like number of pins 20.

Assuming that the sleeve 13 is in such a position that the first, third, sixth and eighth tumbler pins from the end at which the key is inserted are permitted to pass therethrough, as indicated in Figs. 1 and 2 and at line 15A of Fig. 6, a suitable key 22 will lift the first, third, sixth and eighth pins 20 an amount necessary to move the corresponding tumbler pins 10 with which they are in endwise contact until the lower ends of said tumbler pins no longer extend beyond the sleeve. In this position the key 22 is permitted to turn and actuate the shaft 5, the circumference of the shaft 5 moving relative to the sleeve 13 and to the tumbler pins 10 registering with the apertures 17.

Upon such actuation of the key, the sleeve 13 is moved to a new position so as to bring the next adjacent row 15 of apertures, indicated in Fig. 6 by the line 15B, into alignment with the tumbler pins 10. This is accomplished by a pair of meshing gears 25 and 27, the gear 25 being carried on and rotatable relative to the keyway shaft 5 and the gear 27 being fastened to the core 7 of the tumbler magazine to rotate therewith in bore 8 and in bearing 12 in end plate 14 of the lock. The sleeve 13 is provided at one end thereof with a circumferential row of notches 29 (Fig. 6). The magazine 7 is provided with a detent 31 contained in a socket 32 and having its end 33, as shown in Fig. 5, beveled so as to engage the notches 29 of the sleeve for movement with the magazine in one direction of rotation and to slip out of the notches 29 against the bias of spring 34 when the movement of the magazine is reversed by reverse movement of the key 22. Mounted on the end of the barrel 3 is a pawl 35 (Fig. 5) which is biased by a spring 37 so as to engage the notched portion of the sleeve 13. The gear 25 has an opening 40 to receive the end 42 or toe of the key 22.

When the keyway shaft 5 is actuated, the gear 25 is engaged by the end portion 42 of the key 22 during a part turn, which may be about 90°, of the keyway shaft 5, causing the gear 25 to rotate, for example clockwise (Fig. 5), to drive the gear 27 counterclockwise past the pawl 35. The movement of the gears 25, 27, acting through the detent 31 causes the sleeve 13 to be revolved together with the magazine 7. During the reverse movement of the keyway shaft 5 the pawl 35 is adapted to engage one of the notches 29 and hold the sleeve 13 in the position to which it has been advanced while the detent 31 is adapted to be cammed inwardly beneath the portion of the sleeve between two notches 29. To accurately center the row of sockets 9 of the magazine 7 with the selected row 15 of apertures 17 of the sleeve 13, a spring biased detent 46 is provided in the magazine 7 as indicated in broken lines in Figs. 1, 2 and 4. Thus when a key has been used to actuate the lock and has been withdrawn therefrom, the sleeve 13 will have been moved from one combination position to another and will be held in that position by detent 46 until the lock is again operated. The same key, therefore, cannot be used to repeat the actuation of the lock until the lock has been successively actuated by all the other keys corresponding to the series of combinations determined by the sleeve in relation to the tumbler magazine.

In order to minimize the chance of anyone picking the lock, the barrel 3 is provided with a pawl 50 (Figs. 1, 2 and 5) which is biased by a spring 52 to a position with the end 54 of the pawl extending into the keyway shaft 5 as shown in Fig. 2 to prevent said shaft from rotating. When a key is inserted, the inner end of the key is adapted to dislodge the pawl 50 (Fig. 1) so that it will not interfere with the operation of the lock. Thus, anyone attempting to pick the lock must not only force the tumbler pins 10, 20 upwardly on one side of the shaft but must also force the pawl 50 outwardly on the other side.

The keyway shaft 5 is provided at one end thereof with a pin 56 which is engageable with stop pins 58, 60 mounted on an end plate 14 of the lock to limit the rotational movement of the shaft 5, for example to 90° as above indicated.

It will now be apparent that not only must the correct key be used for the initial and each subsequent operation of the lock of this embodiment, but that even if a key is used which, though operating the pin tumblers to unlocking position, does not establish the driving connection between the shaft 5 and the gears 25, 27 the combination will not be damaged. In a watchman's system arranged to require a given succession of keys for operation of the successive stations in the route this failure to operate any lock may be utilized to produce an alarm condition as disclosed in my said copending application Serial No. 415,863, Patent No. 2,376,389. The succession established by apertured sleeve 13 of the present invention which is rotated to successive positions in the operation of the lock by the key, therefore, may constitute an important feature of a watchman's system which is substantially free from the possibility of successfully being tampered with or operated otherwise than as intended.

Referring to Figs. 4 to 9, the multiple combination form of lock 70 is illustrated which for many purposes may be substituted for the automatic combination lock 1. The lock 70 also is a combination type of lock and is in many details the same as the lock 1 of Figs. 1 and 2. The chief differences are in the construction of the keyway shaft 72 and the number of tumbler pins utilized in each of the eight pin tumblers. The other parts which are present in the automatic lock 1 have been for expediency identified by corresponding reference characters.

The keyway shaft 72 supported in bore 6 of barrel 3 is provided with a row of pinways 74 and with cut-away parts 76 and 78 each in the form of a shelf intersecting all of the pinways except one at 80. The pins 20 inserted in pin-

ways 74 preferably are all of the same length which makes it possible to bring their upper flat ends flush with the surface of the shelves 76, 78 by means of a key 82 having a straight upper edge as shown in Fig. 4. The tumbler pins 10 which bear on these flat upper ends of pins 20 thus are all brought into the plane of the shelf surface and upon rotation of the keyway shaft 72 in the direction of the arrow in Fig. 7 will be cammed by the shelves 76 and 78 upwardly through the respective sleeve apertures 17 into their sockets 9 until the ends of pins 20 bear on the cylindrical surface of the shaft 72. The cut-away portions 76 and 78 are on the same side of the row of pinways 74 so that the combination changing key 82 can only be revolved in one direction, that is counterclockwise as viewed in Fig. 7, being prevented from revolving in clockwise direction by projecting pins 10, Fig. 4. The fifth pin 84 in pinway 80 extends downwardly into the keyway shaft 72 from the circumference thereof when engaged by a notch 86 in the combination changing key 82 so that only a key of this character which provides an initial parting between pins at the shelves 76, 78 and parting of pin 84 at the circumference of the shaft, that is at the surface of sleeve 13, can be used to change the combination of the lock. It will be understood that the location along the shaft 72 of the part 85 which is not cut away and surrounds pin 84 and the corresponding location of the notch 86 along the keyway can be varied for different sets of locks. Within the scope of the invention the pins 20 in sockets 74 of the lock of Fig. 4 may be made of different lengths and the master key 82 may be suitably formed to bring the upper flat ends of the pins 20 flush with the shelves 76, 78 so that the parting between pins 20 and pins 10 may be accomplished. The notch 86, however, must be such as will bring the upper flat end of the pin 84 flush with the circumference of shaft 72 as above described.

The key 82 is provided with a toe 42 which enters the opening or notch 40 of gear 25 meshing with gear 27 to rotate sleeve 13 in the same manner as described above in connection with Figs. 1, 2, 3 and 5. The combination thus may be changed by the operation of the lock by key 82 from that shown in Fig. 4 to that, for example, shown in Figs. 8 and 9.

In Figs. 4, 8 and 9 the lock is provided with an additional tumbler pin 90 in each socket 9 which bears upon the flat upper ends of the tumbler pins 10 in sockets 9. When the lock is operated by key 82 to change the combination the pins 90 are pushed up into the sockets by pins 10 bearing initially on shelves 76, 78 and then on the cylindrical surface of shaft 72 until any initially projecting pins 10 no longer project through the sleeve 13. Upon registering of a new set of apertures 17 in the sleeve 13 a new set of pins 10 will project through the apertures of said sleeve following the pins 20 down into pinways 74 upon withdrawal of the key. The pins 10 are of varying length and one or more may pass entirely out of the tumbler magazine sockets 9 and have their upper flat surfaces outside of this magazine and outside of the sleeve 13 so as to be ineffective for locking. By providing the pins 90 which follow the pins 10 down upon removal of the key one or more of these pins 90 will remain in socket 9 and will have its end projecting through the registering sleeve apertures 17 into the pinways 74 of the keyway shaft 72 to effect locking of the lock.

The position of the several pins for unlocking operation of the lock and the form of key 92 for this operation are shown in Fig. 9. This key does not have a toe entering notch 40 and, therefore, is incapable of actuating gears 25, 27 for changing the combination. The parting of the tumbler pins is effected by key 92 only at the surface of the sleeve 13, that is at the cylindrical surface of the shaft 72 between certain of the pins 10 and 90 except for the parting also at said surface between pins 84 and 10. The pins 20 are retained in pinways 74, for the most part preferably below the shelves 76, 78 so that they may be raised to the surfaces of the shelves in operation of the lock by the master key as above described.

In Fig. 4, the second, third, sixth and seventh tumbler pins 10 are shown extending through the sleeve 13 to meet the pins 20 at the surface of the cut-away areas 76 and 78. While these pins will prevent clockwise movement of the combination changing master key 82, as viewed from the right in Fig. 4, they do not prevent counterclockwise movement thereof because the cut-away portions 76 and 78 function to raise the pins 10, 20, 90 upwardly in the pinways 19 and sockets 9 against the bias of springs 11 prior to movement of the sleeve from one tumbler combination position to another.

The lock 70 is provided with a lug 96 (Figs. 4, 8 and 9) which is adapted to engage the head of the regular lock operating key 92 which permits rotation of this key in the clockwise direction, that is, opposite to the rotation (counterclockwise) of the combination changing key 82. The key 82 is provided with a notch 98 so that the lug 96 cannot interfere with its movement in the operation of changing the combination. The clockwise and counterclockwise movements of the keys 92 and 82 respectively, of course, may be interchanged, if desired, by relocating the lug 96 and by having the cut-away portions 76 and 78 on the side of the shaft opposite from their location shown in Fig. 7.

To limit the movement of the shaft 72 in its clockwise or counterclockwise movements, as the case may be, the shaft is provided with a pin 56 which is adapted to engage the stationary stop pins 58 and 60. The location of the stop 60 will depend upon the circumferential spacing between the rows 15 of apertures 17 in the sleeve 13 as is described in connection with Figs. 1, 2, 3 and 5. Fig. 5 may be taken as a section on line 5—5 of Fig. 4 and the description in connection therewith applies also to the lock of Figs. 4, 8 and 9.

With the key 82 inserted in the lock and engaging the gear 25, the magazine 7 and the sleeve 13, as hereinbefore described, will be rotated to a new position providing a new combination when the lock is operated by the superintendent by means of the master key 82. In a watchman's tour system the watchman may use but one key for all stations to be visited when the system is provided with this type of lock. Should the key become lost or stolen, the superintendent or other authorized person may, by using the combination changing key 82, actuate each of the locks and issue a new key to the watchman. Thus, by using this type of lock there will be no need of replacing the several locks when a key becomes missing or the authorities become suspicious that some unauthorized person has obtained a duplicate key. When this type of lock is adopted a rotation of keys is not used and any desired number of stations may be operated by the same operat-

ing key when the stations all are equipped with such locks set at the same combination. Any suitable number of combinations may be provided as with the lock shown in Figs. 1 and 2, as determined by the rows of apertures 17 in sleeve 13. It is, therefore, possible to equip some of the stations of a tour or a group thereof with locks set at one combination and other stations or a group thereof set at a different combination. Other variations in the use of either type of the lock of the invention may be practiced.

It is possible to multiply greatly the number of effective combinations available for a system of locks or for the lock stations of a watchman's system utilizing the combination determining sleeves of the invention by providing in the keyway shafts keyways and keys insertable therein of different cross sections, that is, of different cross sectional contour as determined by the usual longitudinally extending ridges and grooves in the keyway and the complementary grooves and ridges in the key. For each of the different sleeves which it is possible to design for operation with each of a large number of different pin tumbler constructions insertable in a given lock a large number of different keyways may be designed. By arranging the locks or the lock stations in groups, each group having a different keyway, the same sleeve or series of sleeves may be used with the different keyway shafts. The order of the tour may be determined by such a group arrangement or in some other predetermined manner having regard to the need for different keys in the different keyway shafts.

I claim:

1. A combination changing lock comprising a keyway shaft having a keyway and pinways communicating with said keyway, a pin tumbler magazine having a set of pin tumblers, a tumbler combination determining element operable to a plurality of positions to provide access of selected pin tumblers of said magazine in each such position to respective pinways of said shaft so as to be actuatable by a key in said keyway, and means providing an operative connection between said keyway shaft and said element to effect movement of said element to a selected pin tumbler combination determining position upon operation of said lock by said key.

2. In a combination changing lock provided with a keyway shaft having a keyway for receiving a key and having a plurality of pinways communicating with said keyway, a pin tumbler magazine associated with said keyway shaft, said pin tumbler magazine having a socket registerable with each of said pinways of said keyway shaft and tumbler pins respectively in said sockets and means for resiliently urging said pin tumblers along said sockets toward said keyway shaft so as to pass into said shaft pinways when said pinways are in register and communicating with said sockets, the combination of tumbler combination determining means actuatable successively to predetermined positions relative to said shaft and constructed to restrain in selected positions certain pin tumblers from entering said pinways in said keyway shaft while permitting others to enter their respective pinways, and means providing an operative connection between said keyway shaft and said tumbler combination determining means for actuating said means to said successive positions upon operation of said lock.

3. A combination changing lock comprising a keyway shaft, a pin tumbler magazine arranged adjacent said keyway shaft and having a set of pin tumblers actuatable by a key inserted in said keyway shaft, a tumbler combination determining element separate from said keyway shaft and associated with said magazine, said element having a plurality of sets of apertures and being operable to a plurality of positions in each of which selected apertures of a selected set are in register with selected pin tumblers in said magazine to permit said selected tumblers to pass through said apertures for engagement thereof by said key for unlocking operation of said lock, and means providing an operative connection between said keyway shaft and said element to effect movement of said element relative to said keyway shaft to a selected pin tumbler combination determining position upon said unlocking operation of said lock by said key.

4. A combination changing lock according to claim 3 in which said operative connection includes means for effecting said movement of said element forwardly in said unlocking operation of said lock by said key and for preventing movement from the selected position until said shaft again is moved in a succeeding unlocking operation of said lock.

5. A combination changing lock according to claim 3 in which said operative connection includes said key inserted in said keyway.

6. A combination changing lock comprising a keyway shaft for receiving a key, a pin tumbler magazine arranged adjacent said keyway shaft and having a set of pin tumblers actuatable by said key, a tumbler combination determining element associated with said magazine having a plurality of sets of apertures, said tumbler combination determining element being arranged to be movable relative to said keyway shaft and relative to said magazine to a plurality of positions in each of which selected apertures of a selected set are in register with selected pin tumblers of said magazine and with the keyway in said keyway shaft, and means providing an operative connection between said keyway shaft and said element to effect movement of said element to a selected pin tumbler combination determining position upon movement of said keyway shaft in the operation of said lock by a key inserted in said keyway shaft.

7. A combination changing lock comprising a keyway shaft for receiving a key, a pin tumbler magazine arranged adjacent said shaft and having a row of pin tumblers therein actuable by said key, a tumbler combination determining element having a plurality of rows of apertures and arranged to be movable between and with respect to said pin tumbler magazine and said shaft to any one of a plurality of positions with the apertures of a row in register with said row of tumbler pins of the magazine to permit said registering tumblers to pass through said apertures for engagement thereof by a key in said keyway shaft, and means providing an operative connection between said keyway shaft and said element to effect movement of said element from one position of registering a row of apertures with a row of pin tumblers to another upon movement of said keyway shaft in the operation of the lock by said key inserted in said shaft.

8. A combination changing lock comprising a barrel having two parallel cylindrical bores in circumferentially intercommunicating relation, a keyway shaft of cylindrical form rotatably mounted in one of said bores and having a keyway therein for receiving a key, said keyway ex-

tending to the circumference of said cylindrical shaft, a cylindrical pin tumbler magazine having a row of pin tumblers therein arranged in sockets intersecting the circumference of the cylindrical magazine, a cylindrical sleeve surrounding and rotatable relative to said pin tumbler magazine and having a plurality of rows of apertures in the wall thereof, the apertures of each row respectively lying in planes transverse to the magazine axis which include a pin tumbler, said magazine and its surrounding sleeve being mounted in the other bore of said barrel, gearing operatively connected to said sleeve to rotate said sleeve upon operation of said gearing, said gearing being operatively connectable to said keyway shaft by a key inserted in said keyway of said keyway shaft for effecting rotation of said sleeve upon operation of said lock by said key so as to register a row of apertures of said sleeve with said intercommunication between said bores.

9. A combination changing lock comprising a keyway shaft rotatable upon its axis and having a keyway for receiving a key, a pin tumbler magazine having therein a row of sockets and arranged adjacent said shaft to position said row of sockets extending along said shaft, a pin tumbler in each socket actuatable by a key in said keyway, a rotatable tumbler combination determining element having a plurality of rows of apertures therein extending along the axis of rotation of said element, said element being rotatable on its axis with respect to said pin tumbler magazine and with respect to said shaft successively to bring said rows of apertures into register with said row of sockets in said magazine, the spacing of the apertures in each row corresponding to the spacing of selected sockets in said pin tumbler magazine to permit the pins therein to pass through said apertures for engagement by said key, and gearing operatively connectible to said rotatable element and to said keyway shaft to rotate said element upon rotation of said shaft.

10. A combination changing lock according to claim 9 in which said gearing includes a gear rotatable on and relative to said keyway shaft, said gear being provided with means for engaging said key inserted in said keyway shaft so as to permit initial rotation of said key and of said keyway shaft to initiate the unlocking operation of said lock and thereafter to effect movement of said rotatable element a circumferential distance equal to the spacing between two rows of said apertures in said element.

11. A combination changing lock according to claim 8 in which in the operation of said lock said keyway shaft is rotated forwardly and then in reverse and in which said gearing is connected to said magazine to rotate said magazine within its bore, means connecting said magazine to said sleeve to rotate said sleeve concomitantly with the rotation of said magazine in the forward rotation of said shaft, and means for preventing reverse rotation of said sleeve upon reverse rotation of said magazine effected by reverse rotation of said shaft.

12. A combination changing lock according to claim 8 in which in the operation of said lock said keyway shaft is rotated forwardly and then in reverse and in which said gearing is connected to said magazine to rotate said magazine within its bore, means connecting said magazine to said sleeve to rotate said sleeve concomitantly with the rotation of said magazine in the forward rotation of said shaft, means for preventing reverse rotation of said sleeve upon reverse rotation of said magazine effected by reverse rotation of said shaft, and means for limiting the rotational movement of said sleeve to bring a predetermined row of said apertures in said sleeve in register with said intercommunication between said bores.

13. A combination changing lock according to claim 1 in which said means providing an operative connection between said keyway shaft and said pin tumbler combination determining element includes a key inserted in said keyway of said keyway shaft, said keyway shaft also being capable of receiving a key of predetermined form preventing said operative connection but engaging the tumblers of a predetermined combination to actuate said lock.

14. A combination changing lock comprising a keyway shaft having a keyway and pinways communicating with said keyway, a pin tumbler magazine having a set of pin tumblers, a tumbler combination determining element operable to a plurality of positions to provide access of selected pin tumblers of said magazine in each such position to respective pinways of said shaft, pins in said shaft pinways actuatable by a key in said keyway to engage said pin tumblers when made accessible thereto by said element, said shaft being actuatable in unlocking and locking operation of said lock for each position of said element by a key of particular contour cooperating with said pins in said shaft pinways to actuate said pin tumblers to shaft releasing position, said shaft being formed to be actuatable for any position of said element only in a predetermined direction by a key of predetermined contour cooperating with said pins in said shaft pinways to move said pin tumbler to shaft releasing position.

15. A combination changing lock comprising a keyway shaft having a keyway and pinways communicating with said keyway, a pin tumbler magazine having a set of pin tumblers, a tumbler combination determining element operable to a plurality of positions to provide access of selected pin tumblers of said magazine in each such position to respective pinways of said shaft, pins in said shaft pinways actuatable by a key in said keyway to engage said pin tumblers when made accessible thereto by said element, said shaft being actuatable in unlocking and locking operation of said lock for each position of said element by a key of particular form cooperating with said pins in said shaft pinways, and means including a key of predetermined form cooperating with said pins in said pinways to effect initial unlocking movement and providing an operative connection between said keyway shaft and said element to effect movement of said element to a selected pin tumbler combination determining position upon actuation of said shaft.

16. A combination lock comprising a pin tumbler magazine having a row of pin tumblers therein, a keyway shaft having a row of pinways in alignment with said row of pin tumblers and having a portion cut away along said row of pinways to expose certain of said pinways at least at one side thereof, a tumbler combination determining element having a plurality of rows of apertures and operable to positions to provide access of selected pin tumblers of said magazine to respective pinways of said shaft, pins in said shaft pinways, and a key shaped to position the pins in said pinways and any tumbler pins of said magazine which may extend into said pinways with the parting line between pins at the surface of said cut-away portion to permit rotation of

said shaft in the direction opposite to the side thereof which is cut away, whereby said pins extending from said magazine into said pinways are cammed by said surface to move into said magazine to permit operation of said element to different combination determining positions.

17. A combination changing lock according to claim 8 in which said cylindrical shaft is provided with a row of pinways lengthwise thereof and with each pinway in the transverse plane of a pin tumbler of said magazine, said shaft being formed with a surface undercut below the circumferential surface of said shaft and transverse to said pinways, and pins in said pinways for engaging said pin tumblers through registering apertures of said sleeve, said pins being of predetermined length in relation to a key of predetermined contour inserted in said keyway to position said pins with their pin tumbler engaging surface coincident with said undercut surface, whereby upon rotation of said shaft in the initial operation of said lock, said pin tumblers are brought into contact with the circumferential surface of said shaft to disengage said sleeve therefrom so as to be rotatable relative to said magazine.

18. A combination changing lock according to claim 8 in which said cylindrical shaft is provided with a row of pinways lengthwise thereof and with each pinway in the transverse plane of a pin tumbler of said magazine, said shaft being formed with a surface undercut below the circumferential surface of said shaft and transverse to said pinways, and pins in said pinways for engaging said pin tumblers through registering apertures of said sleeve, said pins being of predetermined length in relation to a key of predetermined contour inserted in said keyway to position said pins with their pin tumbler engaging surface coincident with said undercut surface, whereby upon rotation of said shaft in the initial operation of said lock said pin tumblers are brought into contact with the circumferential surface of said shaft to disengage said sleeve therefrom so as to be rotatable relative to said magazine, said shaft having at least one pinway which extends to said circumferential surface of said shaft when a key having therein a notch of predetermined depth in which said pin rests is inserted in the keyway of said shaft.

19. In a tumbler combination lock having a pin tumbler magazine provided with a plurality of tumbler pins therein, a keyway shaft having a keyway for receiving a key and provided with pinways registerable with said tumbler pins and containing pins actuatable by said key to engage said tumbler pins, said shaft having a plurality of surfaces for coincidence of the ends of some of said tumbler pins with one surface and of other tumbler pins with another of said surfaces when said pins are held in unlocking position by a key of predetermined contour in said keyway, one of said surfaces merging circumferentially of said shaft into another of said surfaces to bring certain of said tumbler pin ends in coincidence with said other surface upon rotation of said shaft in unlocking operation of the lock.

20. In a combination changing locks as defined in claim 2, pins in said shaft pinways engageable by said key and engaging said tumbler pins entering said pinways from said sockets and actuating said tumbler pins to unlocking position to release said tumbler combination determining means to move to a succeeding position.

21. A combination changing lock comprising a keyway shaft for receiving a key, a pin tumbler magazine associated with said keyway shaft and having a set of pin tumblers actuatable by a key inserted in said keyway shaft, a tumbler combination determining element separate from said keyway shaft and associated with said magazine, said element being operable to a plurality of positions with respect to said magazine to determine selected pin tumblers of said magazine for engagement by said key inserted in said keyway shaft, and means providing an operative connection between said keyway shaft and said element to effect movement of said element to selected pin tumbler combination determining positions upon operation of said lock by said key.

EDWARD A. SCHACHINGER.

REFERENCES CITED

The following references are of record in the file of this patent:

UNITED STATES PATENTS

Number	Name	Date
1,896,319	Littell et al.	Feb. 7, 1933
1,967,042	Schachinger	July 17, 1934
1,590,232	Fremon	June 29, 1926
1,093,817	Williams	Apr. 21, 1914
1,855,224	Connell et al.	Apr. 26, 1932

Certificate of Correction

Patent No. 2,427,814. September 23, 1947.

EDWARD A. SCHACHINGER

It is hereby certified that errors appear in the printed specification of the above numbered patent requiring correction as follows: In the heading to the printed specification, line 5, for the serial number "415,683" read *415,863*; column 4, line 36, for "line 55" read *line 5–5*; column 14, line 16, for "locks" read *lock*; and that the said Letters Patent should be read with these corrections therein that the same may conform to the record of the case in the Patent Office.

Signed and sealed this 20th day of January, A. D. 1948.

[SEAL]

THOMAS F. MURPHY,
Assistant Commissioner of Patents.