Office de la Propriété Intellectuelle du Canada
Un organisme d'Industrie Canada

Canadian Intellectual Property Office
An agency of Industry Canada

CA 2543915 A1 2005/05/12

(21) 2 543 915

(12) DEMANDE DE BREVET CANADIEN
CANADIAN PATENT APPLICATION

(13) A1

(86) Date de dépôt PCT/PCT Filing Date: 2004/10/27
(87) Date publication PCT/PCT Publication Date: 2005/05/12
(85) Entrée phase nationale/National Entry: 2006/04/27
(86) N° demande PCT/PCT Application No.: US 2004/035858
(87) N° publication PCT/PCT Publication No.: 2005/042377
(30) Priorité/Priority: 2003/10/28 (US60/515,111)

(51) Cl.Int./Int.Cl. *B65D 83/02* (2006.01), *B65D 83/04* (2006.01)

(71) Demandeur/Applicant:
MCNEIL-PPC, INC., US

(72) Inventeurs/Inventors:
CATANI, STEVEN, US;
LUCAS, ANNE-LISE, US;
PANARISI, JOSEPH, US

(74) Agent: SMART & BIGGAR

(54) Titre : DISPOSITIF DE DISTRIBUTION D'EDULCORANT SOLIDE
(54) Title: DISPENSING DEVICE FOR SOLID SWEETENER

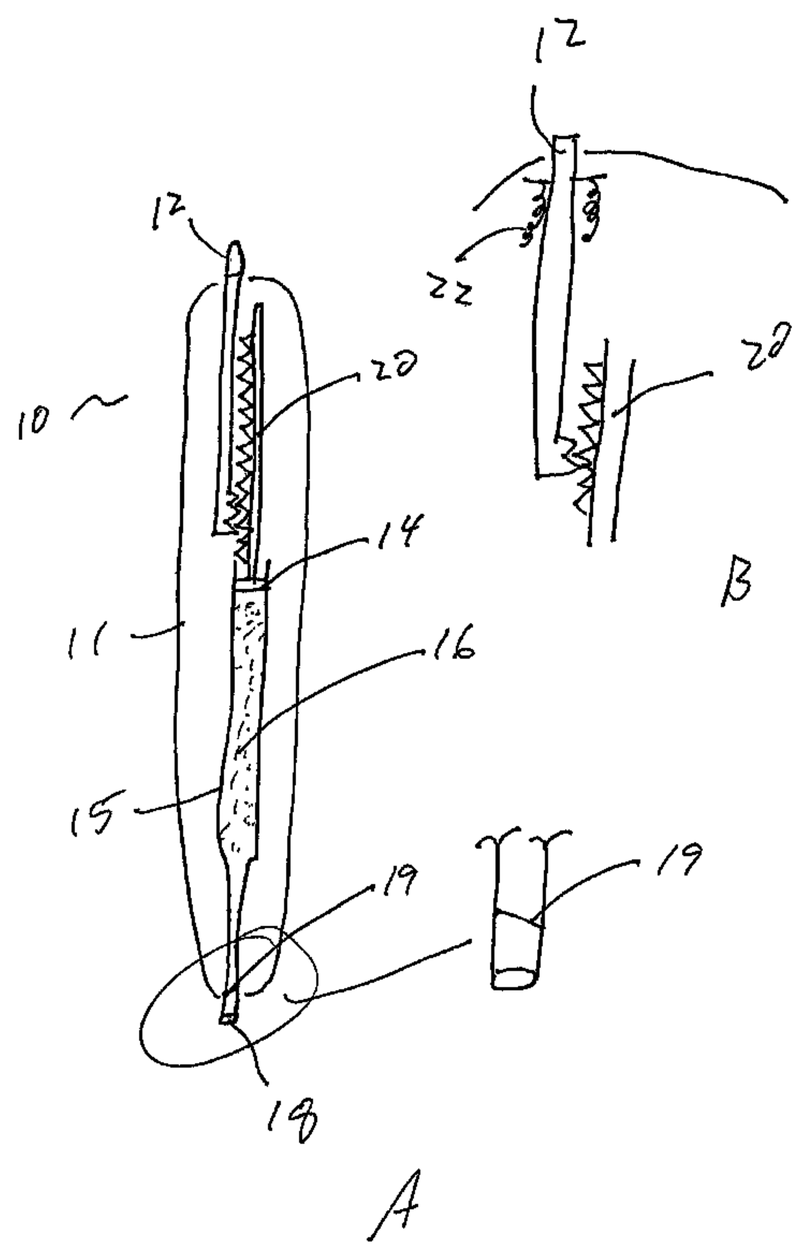

(57) Abrégé/Abstract:
Devices for dispensing unit portions of solid sweetners. The devices incorporate structure for accurately and precisely dispensing known volumes of sweeteners in solid form. The devices are of compact size and, therefore, are conveniently portable by a consumer. Methods for dispensing liquid sweeteners are also disclosed.

(12) INTERNATIONAL APPLICATION PUBLISHED UNDER THE PATENT COOPERATION TREATY (PCT)

(19) World Intellectual Property Organization
International Bureau

(43) International Publication Date
12 May 2005 (12.05.2005)

PCT

(10) International Publication Number
WO 2005/042377 A3

(51) International Patent Classification[7]: B65D 83/02, 83/04

(21) International Application Number: PCT/US2004/035858

(22) International Filing Date: 27 October 2004 (27.10.2004)

(25) Filing Language: English

(26) Publication Language: English

(30) Priority Data:
60/515,111 28 October 2003 (28.10.2003) US

(71) Applicant *(for all designated States except US)*: **MCNEIL-PPC, INC.** [US/US]; Grandview Road, Skillman, NJ 08558 (US).

(72) Inventors; and
(75) Inventors/Applicants *(for US only)*: **CATANI, Steven** [US/US]; 253 Red Oak Trail, Athens, GA 30606 (US). **LUCAS, Anne-lise** [US/US]; 33 Moore Street, Princeton, NJ 08542 (US). **PANARISI, Joseph** [US/US]; 139 Old Orchard Lane, Ocean, NJ 07712 (US).

(74) Agents: **JOHNSON, Philip S.** et al.; One Johnson & Johnson Plaza, New Brunswick, US 08933 (US).

(81) Designated States *(unless otherwise indicated, for every kind of national protection available)*: AE, AG, AL, AM, AT, AU, AZ, BA, BB, BG, BR, BW, BY, BZ, CA, CH, CN, CO, CR, CU, CZ, DE, DK, DM, DZ, EC, EE, EG, ES, FI, GB, GD, GE, GH, GM, HR, HU, ID, IL, IN, IS, JP, KE, KG, KP, KR, KZ, LC, LK, LR, LS, LT, LU, LV, MA, MD, MG, MK, MN, MW, MX, MZ, NA, NI, NO, NZ, OM, PG, PH, PL, PT, RO, RU, SC, SD, SE, SG, SK, SL, SY, TJ, TM, TN, TR, TT, TZ, UA, UG, US, UZ, VC, VN, YU, ZA, ZM, ZW.

(84) Designated States *(unless otherwise indicated, for every kind of regional protection available)*: ARIPO (BW, GH,

[Continued on next page]

(54) Title: DISPENSING DEVICE FOR SOLID SWEETENER

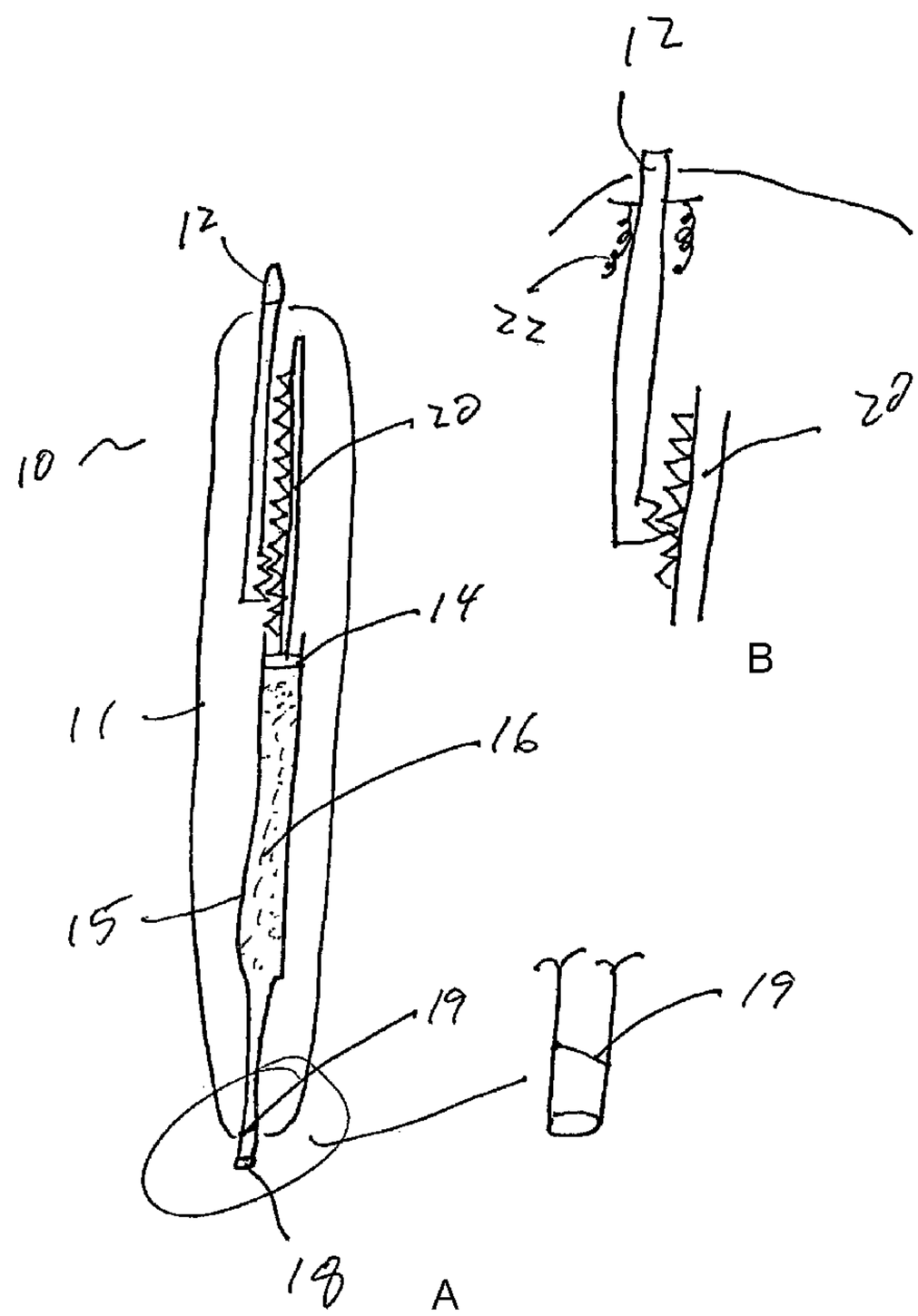

(57) Abstract: Devices for dispensing unit portions of solid sweetners. The devices incorporate structure for accurately and precisely dispensing known volumes of sweeteners in solid form. The devices are of compact size and, therefore, are conveniently portable by a consumer. Methods for dispensing liquid sweeteners are also disclosed.

WO 2005/042377 A3

WO 2005/042377 A3

GM, KE, LS, MW, MZ, NA, SD, SL, SZ, TZ, UG, ZM, ZW), Eurasian (AM, AZ, BY, KG, KZ, MD, RU, TJ, TM), European (AT, BE, BG, CH, CY, CZ, DE, DK, EE, ES, FI, FR, GB, GR, HU, IE, IT, LU, MC, NL, PL, PT, RO, SE, SI, SK, TR), OAPI (BF, BJ, CF, CG, CI, CM, GA, GN, GQ, GW, ML, MR, NE, SN, TD, TG).

Published:

— *with international search report*

(88) Date of publication of the international search report:
6 October 2005

For two-letter codes and other abbreviations, refer to the "Guidance Notes on Codes and Abbreviations" appearing at the beginning of each regular issue of the PCT Gazette.

DISPENSING DEVICE FOR SOLID SWEETENER

FIELD OF THE INVENTION

The invention relates generally to sweeteners. More specifically, the invention relates to devices for delivering controlled amounts of sweeteners to servings of an edible material, such as a beverage.

BACKGROUND OF THE INVENTION

Nutritive and nonnutritive sweeteners have long been used to sweeten comestibles, including beverages. High intensity sweeteners have found significant use in consumer-oriented products as essentially zero-calorie replacements for sugar, e.g., sucrose, glucose, fructose and the like. Such sweeteners are useful as aids to diet regulation for such purposes as weight control and for blood glucose control for diabetics. Because the sweetening power of high intensity sweeteners is typically much higher than that of sugar, however, very small amounts are used in sweetening a single serving of a consumable food product. For example, although one such sweetener, sucralose, is commonly used in "neat" (i.e., substantially undiluted) form for industrial purposes. Its use in this neat form for low volume applications, such as, consumer use, has not generally been practical because the amount of neat sucralose appropriate for a single consumer use typically is only about 0.0066 grams. Such a low quantity is difficult for a consumer to measure with precision and an error of just 0.0003 grams results in a noticeable sweetness difference in a single portion of a typical consumer product. Therefore, the use of neat sucralose for such applications has not generally been found to be practical. To overcome this problem, sucralose products are conventionally diluted to

about 2 to about 10% concentration to facilitate accurate and precise delivery. Such dilution can be in either a solid form or a liquid form.

Packets and tablets of diluted, solid, high intensity sweeteners are widely used throughout the world for consumer applications. At least one such sweetener, sucralose, is currently also available in a form in which air and a complex carbohydrate are use to decrease the volumetric sweetness intensity of the composition to that of table sugar, while delivering a *de minimus* caloric nutritional content.

Thus, although numerous efforts have been made to take advantage of the potential of high intensity sweeteners such as sucralose to be used in very small amounts, the ability to do so with sufficient accuracy and precision has proven to be an elusive goal. There remains a need to provide a device for dispensing single consumer portions of high-concentration sucralose and other high intensity sweeteners with acceptable accuracy and precision for consumer use.

SUMMARY OF THE INVENTION

To meet this and other needs, and in view of its purposes, the present invention provides, in one aspect, the invention is a device for dispensing a unit portion of an elongate solid sweetener composition, comprising, consisting of, and/or consisting essentially of a hollow container having openings at a distal end and proximal end, wherein the elongate solid sweetener is in the hollow container and means for expelling a portion of the elongate solid sweetener composition from the opening in the distal end of the hollow container.

An additional embodiment of the present invention includes a device for dispensing a unit portion of a solid sweetener, comprising, consisting of, and/or

consisting essentially of a housing having a proximal end, a distal end, an opening in the proximal end, and an outlet in the distal end; a hollow body container in the housing having a proximal end, an opening at the proximal end, a distal end, and a friction inducing restriction at the distal end, wherein the distal end of the container faces the distal end of the housing and the solid sweetener is held the hollow body of the container, a movable plunger in the housing having a proximal end extending beyond the opening of the housing and a distal end facing the distal end of the housing; a piston having a distal end within the hollow body of the container for expelling the solid sweetener through the friction inducing restriction of the container and out through the outlet and a proximal end facing the proximal end of the housing when the piston is moved towards the distal end, and means for engaging the plunger and the piston to expel the unit portion of the solid sweetener through the friction inducing restriction.

A further embodiment of the present invention is solid sweetener rod for sweetening a consumable, the solid sweetener rod comprising, consisting of, and/or consisting essentially of a length and a width, an effective amount of a solid sweetener at identical intervals along the length to sweeten a single beverage, and means for communicating such intervals, wherein the solid sweetener rod is configured to fit a device for dispensing the solid sweetener rod at such intervals.

An additional embodiment of the present invention is a method of sweetening a consumable comprising, consisting of, and/or consisting essentially of providing a device for dispensing a unit portion of an elongate solid sweetener composition, comprising a hollow container having openings at a distal end and proximal end, wherein the elongate solid sweetener is in the hollow container and means for expelling a portion of the

elongate solid sweetener composition from the opening in the distal end of the hollow container, and expelling a portion of the elongate solid sweetener into the consumable.

A yet additional embodiment of the present invention is a method of sweetening a consumable comprising, consisting of, and/or consisting essentially of providing a device for dispensing a unit portion of a solid sweetener, a housing having a proximal end, a distal end, an opening in the proximal end, and an outlet in the distal end; a hollow body container in the housing having a proximal end, an opening at the proximal end, a distal end, and an friction inducing restriction at the distal end, wherein the distal end of the container faces the distal end of the housing and the solid sweetener is held the hollow body of the container, a movable plunger in the housing having a proximal end extending beyond the opening of the housing and a distal end facing the distal end of the housing; a piston having a distal end within the hollow body of the container for expelling the solid sweetener through the friction inducing restriction of the container and out through the outlet and a proximal end facing the proximal end of the housing when the piston is moved towards the distal end; means for engaging the plunger and the piston to expel the unit portion of the solid sweetener through the friction inducing restriction and expelling a portion of the elongate solid sweetener into the consumable.

It is to be understood that both the foregoing general description and the following detailed description are exemplary, but are not restrictive, of the invention.

BRIEF DESCRIPTION OF THE DRAWING

The invention is best understood from the following detailed description when read in connection with the accompanying drawing. It is emphasized that, according to common practice, the various features of the drawing are not to scale. On the contrary,

the dimensions of the various features are arbitrarily expanded or reduced for clarity. Included in the drawing are the following figures:

Fig. 1A is a diagram of a device for dispensing sweetener according to the invention; and

Fig. 1B is an expanded view of the ratchet mechanism in the device shown in Fig. 1A.

DETAILED DESCRIPTION OF THE INVENTION

For simplicity, discussion of the devices and methods of the invention will recite the choice of sucralose as the sweetener used in the device 10. It is to be understood, however, that the use of any sweetener is contemplated according to the invention. Other non-limiting examples of such sweeteners include, but are not limited to, sucrose, dextrose, fructose, fructans, sugar alcohols, sucralose, saccharin, acesulfame-K, stevia, neotame, alitame, aspartame, other protein sweeteners, and combinations thereof.

In an embodiment of the invention, there is provided a device 10 for dispensing accurate and precise single-use consumer portions of a sweetener, such as sucralose, in solid form. The device 10 has an elongated hollow container 15 in which is situated a rod or column of sweetener composition in solid form 16. The composition 16 may consist essentially of 100% high intensity sweetener, or it may contain a mixture of sweeteners, the sweetener with a binder or solid diluent or other solid material. The composition 16 may be dispensed in unit amounts by operating a plunger 12 or any other mechanism or means known to those skilled art to gradually advance the solid rod or column of sweetener composition out the end 18 of the device 10, where the portion that has exited is dispensed into a beverage or other consumable item.

The rod or column 16 of composition may be hard or soft, as long as the portion that has exited the device 10 either falls away into the consumable item or can be broken off by the user for addition to the consumable.

Referring now to Fig. 1A, there is shown a device 10 comprising a housing 11, enclosing a mechanism for delivering sweetener. While any mechanism for delivering the solid sweetener may be use, the exemplified mechanism includes a plunger 12, which when pushed by the user of the device 10 drives a piston 14 against a sweetener rod or column 16 housed in a container 15.

The plunger 12 is coupled to the piston 14 by a ratchet mechanism 20, detailed in Fig. 1B. The ratchet mechanism allows the plunger 12 to engage the piston 14 on the downstroke, but the two components are disengaged when the plunger 12 is released and a spring 22 pushes the plunger 12 back upward. The sweetener 16 exits the device 10 at an friction inducing restriction 18 when the plunger 12 is pushed.

In the embodiment shown in Fig. 1A, an optional check valve 19 prevents accidental discharge of the sweetener rod or column 16. As used herein the term"check valve" means any device that prevents the a solid sweetener from leaving the device at times when the plunger or other activation switch is not engaged. The plunger 12 has a controlled stroke depth, so that a controlled amount of solid is dispensed with each operation of the plunger 12. This control allows for accurate delivery of even highly concentrated sweetener rod or column 16. Thus, for example, a solid sucralose rod having 1 mm in diameter would require about a 6 mm length to provide a typical amount for sweetening a single serving of a beverage. Alternately, a solid sucralose rod having a 2 mm diameter would require about a 1.6 mm length to provide a typical amount for

sweetening a single serving of a beverage. A solid sucralose rod being 2 mm diameter by 100 mm length would provide enough for about 60 single servings of a beverage. A solid sucralose rod being 1 mm diameter by 100 mm length would provide enough for about 15 single servings of a beverage.

In another embodiment the solid sweetener rod can fit into a standard pencil lead dispensing device, such as a Pentel model P205 as manufactured by the Pentel Co., Ltd. 7-2, Koami-cho, Nihombashi, Chuo-ku, Tokyo 103-8538, JAPAN and others known to those skilled in that art.

In an embodiment of the invention, the dispensing device 10 includes a container 15 that remains filled with rods or columns 16 containing sucralose, and the user operates a plunger 12 to activate a piston 14 which on each push of the plunger 12 moves another unit of the sucralose rods or columns 16 though the container 15, providing very accurate delivery of the sweetener composition. The piston 14 may directly impinge a rod containing sucralose, thus pushing it by direct pressure, or it may operate by pressurizing air, which in turn pushes the rod containing sucralose. The rod containing sucralose 16 is prevented from leaving the container 15 in the absence of pressure from the plunger 12 or piston 14 by a check valve 19 or other closure device known in the art. The term "unit" as applied to a sweetener composition means an amount providing a predetermined level of sweetness enhancement, which may for example be equal to that of a half teaspoon of sugar, or a full teaspoon of sugar, or any other convenient level of sweetening equivalence. It will be understood that some individuals will use more than one unit of sweetener, according to individual preferences.

In one embodiment of the invention, the device 10 may be constructed and operated very much like a mechanical pencil, with the rod or column sweetener composition being advanced in the same manner as lead would be advanced in a pencil. The rod or column of sweetener composition may be of any convenient thickness, and it may be of any convenient cross-sectional shape, including but not limited to a circular cross section (i.e., a cylindrical rod), a square cross section, a regular polygon cross section, and a rectangular cross section. The rod may optionally be scored in one or more places along its length to enhance ease of breaking off pieces of appropriate size. At least one replacement rod may be stored in device 10 for use once the first rod has been used.

In another embodiment of the invention, the column of sweetener composition may include discrete pellets of the composition, stacked column-wise in the aforementioned elongated hollow container 15. The pellets, each of which incorporates a defined amount of sweetener, may be of any shape, with non-limiting examples being cylindrical, oblong, and spherical.

In a further embodiment of the invention, the device 10 includes pellets of sweetener composition in an elongated hollow container as described above, with the end of the shaft where the pellets exit being equipped with a retainer to keep pellets from exiting the shaft in the absence of the user operating the advancing mechanism. The retainer may be, in exemplary embodiments, an O-ring, tube, diaphragm with a hole in it, or other equivalent structure made of a resilient material (for example, an elastomer) such that a hole in the retainer is smaller than the size of a pellet, but large enough that the pellet can be pushed through the retainer when the advancing mechanism is operated by the user.

Solid sweetener compositions described above may optionally include other ingredients, including as non-limiting examples, flavors and nutrient materials, such as vitamins and minerals, according to the invention.

The components for the devices of the present invention may be made suitable materials, including, but not limited to, plastic, metal, wood, rubber, and the like.

Thus, in its various embodiments, the invention provides devices and methods for dispensing unit portions of high intensity sweeteners in concentrated form, thereby providing portability, compact delivery, ability to adjust delivered portion size, and quantitatively accurate sweetener delivery.

Although the invention is illustrated and described above with reference to specific embodiments, the invention is not intended to be limited to the details shown. Rather, various modifications may be made in the details within the scope and range of equivalents of the components and steps without departing from the invention.

What is claimed is:

1. A device for dispensing a unit portion of an elongate solid sweetener composition, comprising

a hollow container having openings at a distal end and proximal end, wherein the elongate solid sweetener is in the hollow container and

means for expelling a portion of the elongate solid sweetener composition from the opening in the distal end of the hollow container.

2. The device of claim 1, wherein the solid sweetener is in a form selected from the group consisting of a elongate form, a powder form, and a pellet form.

3. The device of claim 2, wherein the solid sweetener is in an elongate form having a cross-sectional shape selected from the group consisting of circular, square, regular polygon, rectangular, and oval.

4. The device of claim 3, wherein the elongate form is a rod or a column.

5. The device of claim 1, wherein the solid sweetener is selected from the group consisting of sucrose, dextrose, fructose, fructans, sugar alcohols, sucralose, saccharin, acesulfame-K, stevia, neotame, alitame, aspartame, and combinations thereof.

6. The device of claim 5, wherein solid sweetener further comprises a binding agent, a diluant, a flavor, a nutrient, or combinations thereof.

7. The device of claim 1, wherein the solid sweetener is a column of discrete pellets. 8. The device of claim 7, wherein the pellets have a shape selected from the group consisting of cylindrical, oblong, and spherical.

9. The device of claim 7, wherein the solid sweetener is selected from the group consisting of sucrose, dextrose, fructose, fructans, sugar alcohols, sucralose, saccharin, acesulfame-K, stevia, neotame, alitame, aspartame, and combinations thereof.

10. The device of claim 9, wherein the solid sweetener further comprises a binding agent, a diluant, a flavor, a nutrient, or combinations thereof.

11. The device of claim 5, wherein the solid sweetener is selected from the group consisting of a single crystal a portion of a single crystal, an amorphous solid, a compressed powder, or combinations thereof.

12. A device for dispensing a unit portion of a solid sweetener,

a housing having a proximal end, a distal end, an opening in the proximal end, and an outlet in the distal end;

a hollow body container in the housing having a proximal end, an opening at the proximal end, a distal end, and an friction inducing restriction at the distal end, wherein the distal end of the container faces the distal end of the housing and the solid sweetener is held the hollow body of the container,

a movable plunger in the housing having a proximal end extending beyond the opening of the housing and a distal end facing the distal end of the housing;

a piston having a distal end within the hollow body of the container for expelling the solid sweetener through the friction inducing restriction of the container and out through the outlet and a proximal end facing the proximal end of the housing when the piston is moved towards the distal end; and

means for engaging the plunger and the piston to expel the unit portion of the solid sweetener through the friction inducing restriction.

13. The device of claim 12, wherein the means for engaging the plunger and the piston comprise a ratchet mechanism for engaging the plunger and the piston when the proximal end of the plunger is depressed to move the piston towards the distal end and

14. The device of claim 12 further comprising a spring located on the plunger for disengaging the plunger and the piston when the proximal end of the plunger is released and moving the piston towards the proximal end.

15. The device of claim 21, wherein the solid sweetener is in a form selected from the group consisting of a elongate form, a powder form, and a pellet form.

16. The device of claim 15, wherein the solid sweetener is in an elongate form having a cross-sectional shape selected from the group consisting of circular, square, regular polygon, rectangular, and oval.

17. The device of claim 16, wherein the elongate form is a rod or a column.

18. The device of claim 12, wherein the solid sweetener is selected from the group consisting of sucrose, dextrose, fructose, fructans, sugar alcohols, sucralose, saccharin, acesulfame-K, stevia, neotame, alitame, aspartame, and combinations thereof.

19. The device of claim 18, wherein solid sweetener further comprises a binding agent, a diluant, a flavor, a nutrient, or combinations thereof.

20. The device of claim 12, wherein the solid sweetener is a column of discrete pellets.

21. The device of claim 20, wherein the pellets have a shape selected from the group consisting of cylindrical, oblong, and spherical.

22. The device of claim 20, wherein the solid sweetener is selected from the group consisting of sucrose, dextrose, fructose, fructans, sugar alcohols, sucralose, saccharin, acesulfame-K, stevia, neotame, alitame, aspartame, and combinations thereof.

23. The device of claim 22, wherein the solid sweetener further comprises a binding agent, a diluant, a flavor, a nutrient, and combinations thereof.

24. The device of claim 22, wherein the solid sweetener is selected from the group consisting of a single crystal a portion of a single crystal, an amorphous solid, a compressed powder, or combinations thereof.

25. A solid sweetener rod for sweetening a consumable, the solid sweetener rod comprising a length and a width, an effective amount of a solid sweetener at identical intervals along the length to sweeten a single beverage, wherein the solid sweetener rod is configured to fit a device for dispensing the solid sweetener rod.

26. The solid sweetener rod of claim 25, wherein the solid sweetener is selected from the group consisting of sucrose, dextrose, fructose, fructans, sugar alcohols, sucralose, saccharin, acesulfame-K, stevia, neotame, alitame, aspartame, and combinations thereof.

27. The solid sweetener rod of claim 27, wherein the solid sweetener further comprises a binding agent, a diluent, a flavor, a nutrient, or combinations thereof.

28. The solid sweetener rod of claim 26, wherein the solid sweetener is selected from the group consisting of a single crystal a portion of a single crystal, an amorphous solid, a compressed powder, or combinations thereof.

29. A solid sweetener pellet for sweetening a consumable, the solid sweetener pellet comprising an effective amount of a solid sweetener, wherein the solid sweetener pellet is configured to fit a device for dispensing the solid sweetener pellet.

30. A solid sweetener pellet of claim 29, wherein the solid sweetener is selected from the group consisting of sucrose, dextrose, fructose, fructans, sugar alcohols, sucralose, saccharin, acesulfame-K, stevia, neotame, alitame, aspartame, and combinations thereof.

31. The solid sweetener pellet of claim 30, wherein the solid sweetener further comprises a binding agent, a diluent, a flavor, a nutrient, or combinations thereof.

32. The solid sweetener pellet of claim 30, wherein the solid sweetener is selected from the group consisting of a single crystal a portion of a single crystal, an amorphous solid, a compressed powder, or combinations thereof.

33. A solid sweetener powder for sweetening a consumable, the solid sweetener powder comprising an effective amount of a solid sweetener, wherein the solid sweetener pellet is configured to fit a device for dispensing the solid sweetener powder.

34. A solid sweetener powder of claim 33, wherein the solid sweetener is selected from the group consisting of sucrose, dextrose, fructose, fructans, sugar alcohols, sucralose, saccharin, acesulfame-K, stevia, neotame, alitame, aspartame, and combinations thereof.

35. The solid sweetener powder of claim 34, wherein the solid sweetener further comprises a binding agent, a diluent, a flavor, a nutrient, or combinations thereof.

36. The solid sweetener powder of claim 34, wherein the solid sweetener is selected from the group consisting of a single crystal a portion of a single crystal, an amorphous solid, a compressed powder, or combinations thereof.

37.A method of sweetening a consumable comprising

providing a device for dispensing a unit portion of an elongate solid sweetener composition, comprising

a hollow container having openings at a distal end and proximal end, wherein the elongate solid sweetener is in the hollow container and

means for expelling a portion of the elongate solid sweetener composition from the opening in the distal end of the hollow container, and

expelling a portion of the elongate solid sweetener into the consumable.

38. A method of sweetening a consumable comprising

providing a device for dispensing a unit portion of a solid sweetener comprising

a housing having a proximal end, a distal end, an opening in the proximal end, and an outlet in the distal end;

a hollow body container in the housing having a proximal end, an opening at the proximal end, a distal end, and an friction inducing restriction at the distal end, wherein the distal end of the container faces the distal end of the housing and the solid sweetener is held the hollow body of the container,

a movable plunger in the housing having a proximal end extending beyond the opening of the housing and a distal end facing the distal end of the housing;

a piston having a distal end within the hollow body of the container for expelling the solid sweetener through the friction inducing restriction of the container and out

through the outlet and a proximal end facing the proximal end of the housing when the piston is moved towards the distal end; and

means for engaging the plunger and the piston to expel the unit portion of the solid sweetener through the friction inducing restriction and

expelling a portion of the elongate solid sweetener into the consumable.

39. The method of claim 38, wherein the means for engaging the plunger and the piston comprise a ratchet mechanism for engaging the plunger and the piston when the proximal end of the plunger is depressed to move the piston towards the distal end and

40. The method of claim 38 further comprising a spring located on the plunger for disengaging the plunger and the piston when the proximal end of the plunger is released and moving the piston towards the proximal end.

41. The method of claim 38, wherein the solid sweetener is in a form selected from the group consisting of a elongate form, a powder form, and a pellet form.

42. The method of claim 41wherein the solid sweetener is in an elongate form having a cross-sectional shape selected from the group consisting of circular, square, rectangular, regular polygon, and oval.

43. The method of claim 42, wherein the elongate form is a rod or a column.

44. The method of claim 38, wherein the solid sweetener is selected from the group consisting of sucrose, dextrose, fructose, fructans, sugar alcohols, sucralose, saccharin, acesulfame-K, stevia, neotame, alitame, aspartame, and combinations thereof.

45. The method of claim 44, wherein solid sweetener further comprises a binding agent, a diluant, a flavor, a nutrient, or combinations thereof.

46. The method of claim 43, wherein the solid sweetener is a column of discrete pellets.

47. The method of claim 46, wherein the pellets have a shape selected from the group consisting of cylindrical, oblong, and spherical.

48. The method of claim 43 , wherein the solid sweetener is selected from the group consisting of sucrose, dextrose, fructose, fructans, sugar alcohols, sucralose, saccharin, acesulfame-K, stevia, neotame, alitame, aspartame, and combinations thereof.

49. The method of claim 43, wherein the solid sweetener further comprises a binding agent, a diluant, a flavor, a nutrient, or combinations thereof.

50. The method of claim 48, wherein the solid sweetener is selected from the group consisting of a single crystal a portion of a single crystal, an amorphous solid, a compressed powder, or combinations thereof.

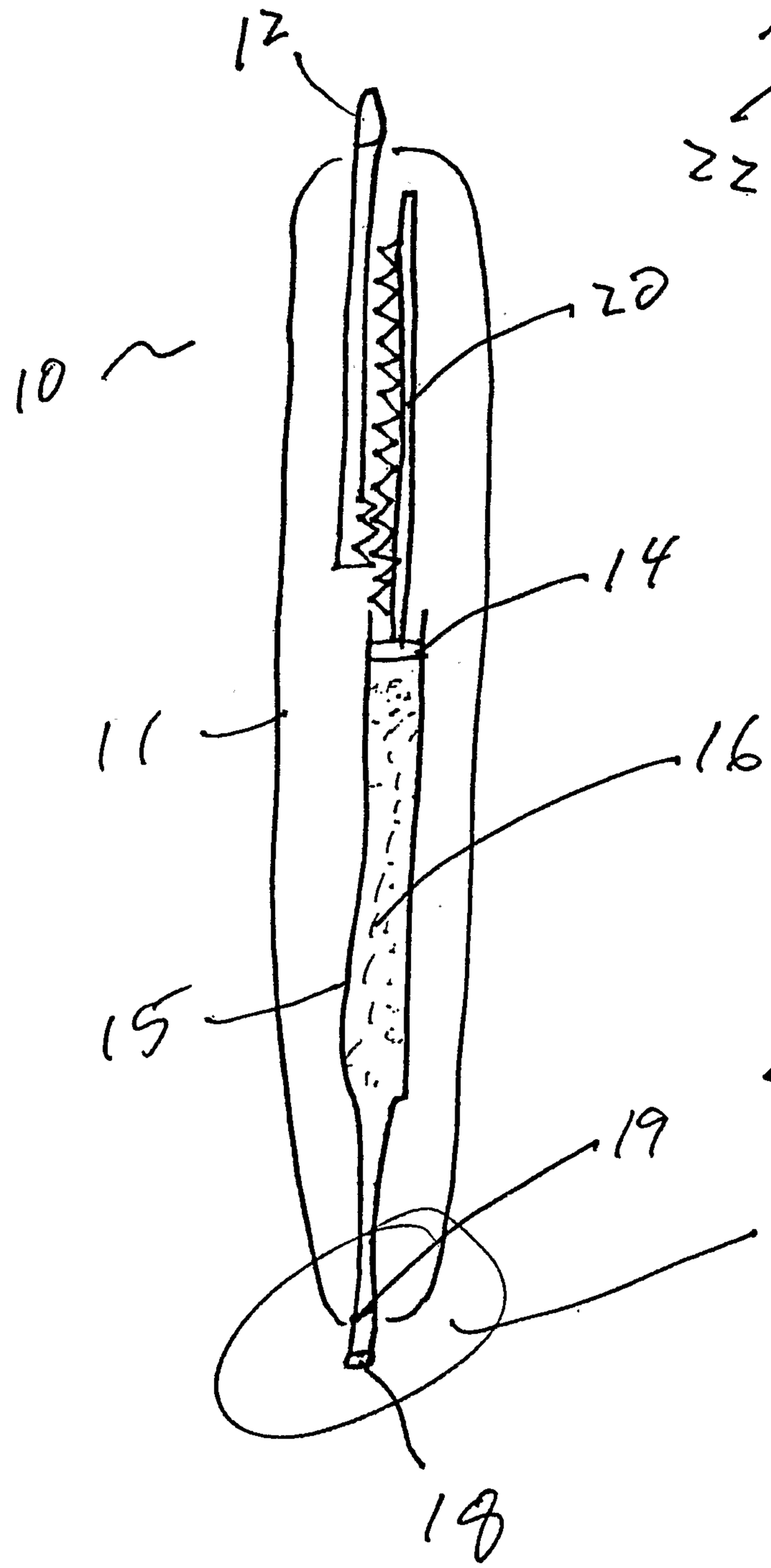

Fig. 1A

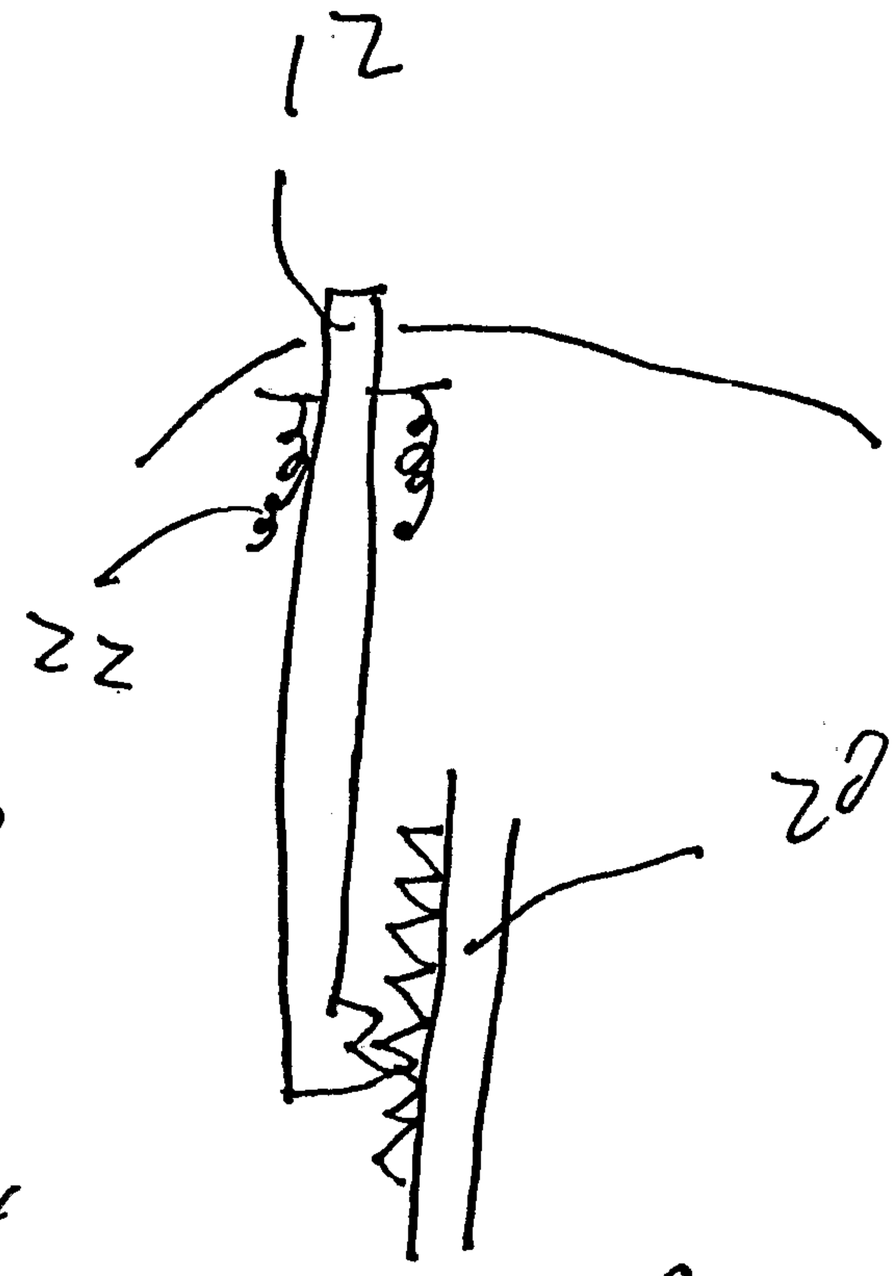

Fig. 1B

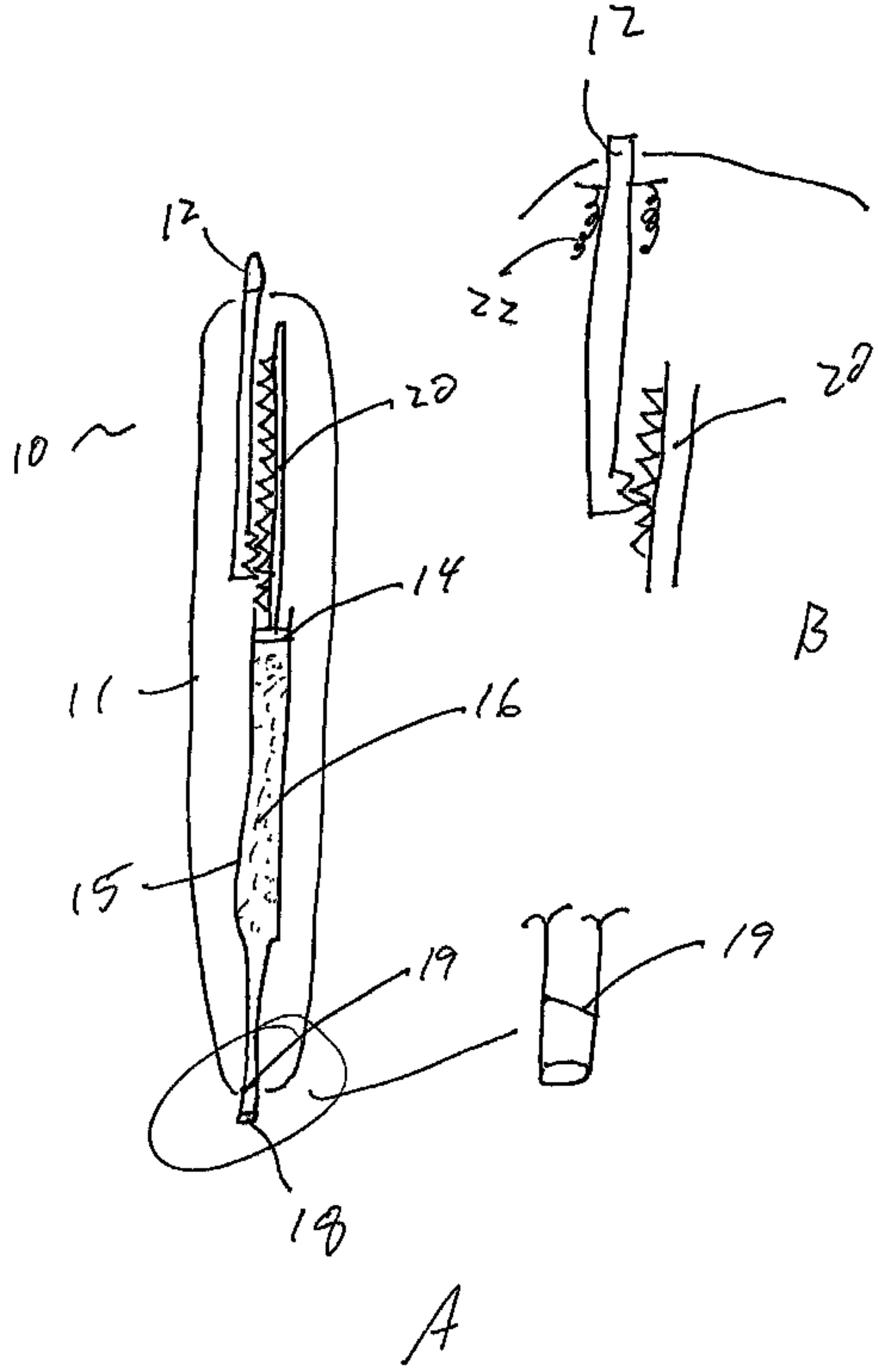
12
22
20
B
12
20
10
14
11
16
15
19
19
18
A