PATENT SPECIFICATION (11) 1 565 679

1 565 679

(21) Application No. 50413/76 (22) Filed 3 Dec 1976

(31) Convention Application No's. 638680 (32) Filed 8 Dec 1975
638679 8 Dec 1975
731995 13 Oct 1976 in

(33) United States of America (US)

(44) Complete Specification Published 23 Apr 1980

(51) INT. CL.[3] B66C 1/10

(52) Index at Acceptance B8H 509 RX



(54) A BOTTLE HOLDING CHUCK

(71) We, WHEATON INDUSTRIES, a corporation organised and existing under the laws of the State of New Jersey, United States of America, of Millville, New Jersey, United States of America, do hereby declare the invention for which we pray that a Patent may be granted to us and the method by which it is to be performed to be particularly described in and by the following statement:–

This invention pertains to a bottle holding chuck.

Numerous attempts have been made to develop processes for applying plastic coatings to glass containers, particularly for packaging pressurized beverages. These coatings have been used to protect the glass container's surface from scratching, to contain fragments in the event of breakage, and for decorative appeal.

The use of fluidized beds of thermoplastic coating powder in which heated containers are dipped to effect coating has been disclosed in U.S. Patent 3,857,498-Campagna et al., assigned to Dart Industries, Inc., and U.S. Patent 3,901,180, of common assignment herewith. The latter patent deals specifically with an apparatus for applying the thermoplastic coating by a fluidized bed process in a continuous manner.

A preferred coating material of the present invention is a thermoplastic ionic copolymer of ethylene to which is added a fluidizing material such as fine grained silica powder.

For a more specific description of the coating powder preferred in the present invention, reference may be made to U.S. Patent No. 3,264,272. In particular, such coating powders are copolymers of polyethylene and α, β-ethylenically unsaturated carboxylic acids, partially neutralized by metal ions. The most preferred coating powder with which the present process has been developed and with regard to which the various process temperature described herein are related is an ionic copolymer of ethylene and 11% by weight methacrylic acid, Melt Index 20 having 40% of its carboxylic acid groups neutralized with sodium ions. In general, this most preferred coating powder is relatively flowable above about 350°F and is not subject to significant oxidative degradation (except upon extended exposure) below about 425°F. The preferred bottle coating temperature with this material is about 360–410°F. At this temperature, the powder deposits in a fine layer and adheres uniformly to the surface to be coated. Complete fusion is ensured by gradual heating in the post heat chamber to just below the temperature at which oxidative degradation becomes significant and holding the coated container at said elevated temperature (with the coating in flowable condition) for several minutes.

For a better understanding of this invention, reference should be made to the following detailed description thereof, taken in conjunction with the appended claims and the accompanying drawings, in which:

Specifically the present invention provides a bottle holding chuck including

1) a horizontally disposed "U-shaped" member adapted to support a bottle resting thereon at a generally horizontal surface feature on the outer surface near the top of said bottle and

2) a cap member adapted to fit loosely over the top of said bottle to prevent horizontal movement thereof, said horizontally disposed member and said cap member being cooperatively arranged and adapted to carry

a bottle positively positioned thereon and suspended therefrom with substantially all of said bottle below said surface feature free of contact with any part of said chuck. Desirably the cap member is closed at the top to prevent foreign materials entering the bottle while it is held in the chuck.

Figures 1A and 1B together comprise a side elevation view of an in-line fluid bed glass container coating apparatus;

Figure 2 is a top view of the apparatus shown in Figures 1A and 1B;

Figure 3 is an enlarged sectional view in the plane 3–3 of Figure 1A of the apparatus shown in Figure 1A;

Figure 4 is an enlarged detail view of one part of the mechanism shown in Figure 3, with certain elements thereof in an alternate position;

Figure 5 is an enlarged sectional view in the plane 5–5 of Figure 1A of one part of the apparatus shown in Figure 1A;

Figure 6 is a detail view in the plane 6–6 of Figure 5, of one part of the mechanism shown therein;

Figure 7 is a sectional view in the plane 7–7 of another part of the mechanism shown in Figure 5;

Figure 8 is a detail view of a part of the mechanism shown in Figure 5 with certain of the elements thereof in an alternate position to that shown in Figure 5;

Figure 9 is a detail sectional view of one part of the apparatus shown in Figure 1A, taken in the plane 9–9 thereof;

Figure 10 is a detail sectional view in the plane 10–10 of the mechanism shown in Figure 9;

Figures 11 and 12 are detail views in the planes 11–11 and 12–12, respectively, of the apparatus shown in Figure 1B;

Figure 13 is a detail sectional view in the plane 13–13 of a part of the apparatus shown in Figure 1A;

Figure 14 is a detail side elevation view of the mechanism shown in Figure 13;

Figure 15 is a perspective assembly view of the chuck bar transport system in the apparatus shown in the previous figures;

Figure 16 is a detailed cross-sectional view in the plane 16–16 of the mechanism shown in Figure 15; and

Figure 17 is a graph showing the relationship of the surface temperature of the containers being coated to time as the containers are passed through the various stages of the process of the present invention.

The invention will now be described with reference first to the preferred apparatus for carrying out the coating process.

Referring more specifically to Figures 1A, 1B and 2, there is shown container delivery lehr 2 and temperature preconditioning chamber 4 with container 6 at one end thereof.

Container 6, or more accurately, a plurality thereof, as shown in Figure 3, is removed from lehr 2 by the rotary motion of motor 8 transposed through clutch brake 9 and speed reducing gear box 10 to crank arm 12 pivotally attached through connecting member 14 to a second crank arm 16, in turn turning shaft 18 on which is mounted a pair of container lift arms 20.

At the end of each container lift arm 20, opposite that at which it is mounted on shaft 18, arm 20 is pivotally connected to a vertical hanger 22. At each end of each container lift arm 20, lift arm 20 is also pivotally attached to spacing members 24, in turn pivotally connected to the opposite ends of a parallelogram-forming member 26, in turn attached at its upper end to a second shaft 28 turned by third crank arm 30, which turns in unison with shaft 18.

The assembly of lift arms 20 and parallelogram-forming members 26, together with hangers 22 and other elements suspended therefrom, are adapted to be shifted transversely to the direction of general container movement in the machine, i.e., vertically downward in Figure 2, by means of cylinder 32 fixedly mounted at one end to frame member 34 and at its other end to sliding bushing 36 with key 38 engaging a groove therefor in shaft 18.

After pick-up from the end of lehr 2, containers 6 are conveyed through an in-line fluid bed container coating apparatus from left to right, as seen in Figures 1A, 1B and 2, as they are suspended from one of a series of chuck bars 38 with end members 40 supported by rollers 42, which in turn rest on transfer rail segments 43, 44 and 46. Transfer rail segments 43, 44 and 46 are in turn supported from various static frame members, including members 48, 49, 50, 51, 52 and 53. Chuck bars 38 are supported in spaces at the discontinuities in transfer rail segments 43, 44 and 46 by pick-up station bar support 54 and dipping station bar support 56.

In Figure 1A, the container lift arm 20 and its related assembly including hangers 22 and pick-up station bar support 54 are shown in a raised position, just prior to transfer of containers longitudinally along the machine. The same assembly is shown in phantom in its lower position ready for container pick-up.

Fluid bed coating is accomplished, in the apparatus of Figure 1A, 1B and 2, by dipping containers 6 in a tank 58, containing fluidized thermoplastic powder, while the containers are at an elevated temperature. Thermoplastic powder coming in contact with the hot container sidewalls fuses and forms a coating on these sidewalls.

Dipping of containers 6 into fluid bed coating tank 58 is effected by the action of piston 60, mounted at its lower end to a horizontal frame member 62 and its upper end to a cross-member 64 in turn mounted to a pair of vertically moveable bar suspension members 66, which are in turn attached to

dipping station bar support 56. Also associated with the vertically moveable bar suspension members 68 are rack members 68 and a pair of anti-skew gears 70 mounted on a common shaft 72 extending across the machine and journalled in lengthwise side frame members 73.

To the right of fluid bed coating tank 58 containers pass in sequence through thermal soaking chamber 74, air cooling chamber 76, spray quenching chamber 78 and thence to container out station 80.

Near the right end of the apparatus shown in Figures 1A, 1B and 2, and as best seen in Figures 1B and 2, this apparatus includes motor 82, the shaft of which is connected to rotor 84 carrying cam followers 86 and 88 engaging longitudinal transfer plate 90, in turn attached to sleeves 92 for effecting longitudinal movement of transfer tubes 94. Limited rotational movement of transfer tubes 94 is effected by pivotally connected linking members 190, 192 in turn connected to shaft 98, to which limited intermittent rotary movement (in alternating directions) is imparted by piston 100, attached at one end to frame member 102 and at its opposite end to a circumferential position on crank arm 104 at the end of shaft 98. Frame extension 106 and guides 108 provide a receiving point for containers at take-out station 80 and a pick-up point for chuck bars 38, after the removal of containers 6 therefrom for the return of chuck bars 38 to the left end of the apparatus. Mechanical means for performing these functions automatically, particularly including container release and take-out and return of bars 38 to the container pick-up station of the machine, would be included in a more preferred embodiment of this apparatus.

In Figures 3 and 4, the mechanism for picking up containers 6 from lehr 2 is shown in detail, before and after container engagement. More specifically, there is seen chuck bar 38 and, suspended therefrom, a plurality of chucks including chuck necks 110 and container neck supports 112.

Retainer bar 114 holds chuck necks 110 in a raised position prior to engagement of chucks and containers. At its left end, as seen in Figure 3, pick-up station bar support 54 pushingly engages rack 116, which in turn engages gear 118 and second rack 120. Gear 118 is mounted on a shaft with crank arm 122 attached to follower spring 124, in turn attached to static frame member 126. Second rack 120 is fixedly secured to transversely slideable bar 128, which is supported by rollers 130. Suspended from transversely slideable bar 128 are a plurality of container neck backing members 132. Abutment 134 limits the rightward movement of bar 128, while adjustable abutment screw 137 is positioned to push inwardly on end piece 139 of retainer bar 114 upon the coordinated leftward movement of chuck bar 38 and its associated assembly and retainer members and rightward movement of bar 128 and its associated members.

Following gripping of containers, as shown in Figure 4, chuck bar 38 is lifted back to the level of transfer rail segments 43, 44 and 46 and transversely reversed to its starting lateral position.

The manner in which containers 6 are thus suspended is best seen in Figures 5–8. Specifically referring to Figure 5, chuck neck 110 is seen to include an upward extension 110A slideable within chuck support 136 and urged downwardly by spring 138. Air passageway 140 extends downwardly through upward extension 110A of chuck neck 110. A reduced diameter section 142 on the outer surface of upward neck extension 110A is adapted to engage slot 144 in retainer bar 114. Thus, chuck neck 110 is suspended in its upward position, as shown in Figure 8, with retainer bar 114 in its leftmost position. Rightward movement of retainer bar 114 permits chuck neck 110 to move downwardly over containers 6, as shown in Figure 5. A retainer and spring 146 in chuck bar end member 40 tends to position retainer bar 114 positively in one of its two preselected positions as it engages slots provided for that purpose in retainer bar end piece 139.

Rollers 42 are actually seen to rest on a shelf member 148 in turn supported on an inwardly extending channel 150 attached to transfer rail segment 46. Openings 153 in channel 150 at each position or station for chuck bars 38 along the length of the machine are adapted to receive pivotally mounted locking members 152, held in locking engagement by spring means 156. More specifically, retainer 158 engaging retainer slot 160 urges pivotally mounted locking member 152 into a locking position within channel 150.

Clockwise movement of transfer tube 94, and engagement of dog 154 with pivotally mounted locking member 152, frees end member 40 and chuck bar 38 for longitudinal movement by the longitudinal engagement of dog 154 in slot 162 of end member 40, so that upon longitudinal movement of transfer tube 94, chuck bar 38 is moved longitudinally in engagement therewith. To permit such longitudinal movement of transfer tube 94, it is seated and rests for sliding movement within support shoulder members 164 and on roller bearing member 166 of transfer rail segment 46. Similar support, bearing, channel and shelf members are also associated with transfer rail segments 43 and 44.

To facilitate the passage of air downwardly through chuck neck 110 and over the upper portion of the neck of containers 7 as containers 6 are dipped into the fluidized

thermoplastic powder in the bed contained in tank 58, end member 40 includes air passageways 168 communicating with the inter hollow space of chuck bar 38, such that pressurized air introduced through air passageways 168 finds an outlet downwardly through air passageways 140 and the upward extended section 110A of chuck neck 110.

As seen in Figures 9 and 10, dipping station bar support 56 includes a connection 170 passing through an air passageway 172 to air outlets 174 in an air passageway engagement member 176 urged inwardly by spring means 178. Sloped surfaces 180 are provided on member 176 to facilitate mating engagement of air outlets 174 with the outer end of air passageways 168 in end member 40 of chuck bar 38.

In the operation of the in-line fluid bed container coating apparatus, containers picked up from lehr 2 are progressively transferred through a multiplicity of intermediate stations along the length of the next successive 180° arc segments of the single revolution of motor 82. To return transfer tubes 94 to their starting positions, motor 82 is rotated a single rotation in the opposite direction.

During the dwell time between two forward movements of longitudinal transfer plate 90, i.e., after cam follower 86 has moved the transfer assembly forward and before cam follower 88 has engaged to effect the second stage of the forward movement of the assembly, piston 100 is actuated and operates through crank arm 104, shaft 98 and disc 188 through pivotally connecting pusher elements 190 and 192, to push oppositely directed crank arms 194 and thereby to rotate, in opposite directions, transfer tubes 94. At a connecting point 200, each of the transfer tubes 94 is divided and mated by a male T-shaped section 202 and a corresponding female receiving groove 204. As seen in Figure 16, the corresponding female receiving groove 204 permits limited angular movement between the two halves of transfer tubes 94 joined thereby. More specifically, receiving groove 204 is adapted to permit limited rotational movement of the rearward sections of transfer tubes 94 without corresponding angular movement being imparted to the forward sections of transfer tube 94. In this manner, when the second stage of the transfer movement of transfer tubes 94 from left to right in these drawings is effected by cam follower 86, the right hand sections of transfer tubes 94 have been rotated upwardly so that dogs 152 are disengaged from the chuck bars at their respective container stations. In this manner, movement of containers at the more widely spaced stations is effected by the second stage of the longitudinal movement of transfer tubes 94 while those containers at the more closely spaced stations are not moved. In order to effect return of transfer tubes 94 to their starting positions, cams 206 are attached to the left hand sections of transfer tubes 94. Cams 206 ride on tracks 208 during the transfer movement of transfer tubes 94 and at the conclusion of the second stage of this movement engage cam receiving member 210 which is then moved downwardly by piston 212 to return the two lengthwise halves of each of the transfer tubes 94 to the same angular position. The return movement of transfer tubes 94 by cam followers 86 and 88 is then effected, as previously described, and the transfer mechanism is ready for the next cycle.

It should be noted first that this process is adapted to any of a wide range of thermoplastic fluid bed coating powders, to produce durable, high quality and very clear, thin (on the order of 4 mils) and uniform (in the range of from 3 to 6 mils) coating. Preferably, this coating is formed of resins. This coating powder is fluidized in the fluidized bed coating tank with air, at a pressure of from 1 to 4 pounds per square inch, introduced through a porous plate forming the bottom of the fluidized bed tank to produce a fluidized bed of a height on the order of from 12 to 24 inches. Clean, dry air at a temperature of below 100°F is required for this purpose. Although the details of the fluidized bed tank are not illustrated herein, generally, the tank may include an overflow trough or outer tank with a slight space between the inner and outer tank to serve as an overflow trough for collecting excess powder. A vacuum may be pulled through this trough to prevent loss of powder and to avoid contamination of the surrounding air space.

An important feature of the process is the careful thermal conditioning of the containers before and after coating. In particular, a critical factor has been found to be the lack of uniformity of surface temperature and thermal characteristics of various containers in a row of containers and even on different parts of the same container. The present invention overcomes those undesirable conditions by having a thermal conditioning chamber prior to the immersion of the containers to be coated in the fluid bed coating material. This may be accomplished by a relatively long dwell time in the thermal conditioning preheat oven 4. Alternatively, containers already preheated to a higher temperature, such as those passing through a post-production annealing oven or a decoration conditioning lehr are passed directly from such annealing ovens or lehrs at a temperature just below that necessary for fluid bed coating in the process and apparatus. The containers are then reheated through a relatively small temperature increment, on the order of 20–40°F, in thermal conditioning oven 4.

In this manner, a high degree of temperature uniformity and heat transfer characteristics are

obtained throughout the containers to be coated. With the preferred coating powder, containers to be coated are heated in a preconditioning chamber at about 375° to 425°F, preferably about 400°F. Upon leaving the heat conditioning chamber, there is a delay of on the order of 10 to 15 seconds, preferably nearer 10 seconds, prior to immersion of the containers in the fluidized bed coating tank. The containers, with the surfaces thereof at a temperature in the range of 360°–410°F, (preferably about 400°F) are then immersed for a period of on the order of from 1 to 5 seconds, preferably closer to 2 seconds, during which time the surface of the now coated containers may fall to about 300°F, then begin rising, due to the heat contained in the container walls, back toward 400°F.

At this point, a second fluidized bed coating tank may be interposed in the process of this invention (and in the apparatus illustrated for purposes of describing this invention). Such a second tank may be provided for a second immersion to form a similarly uniform second coating, to bring the total coating thickness to 8 to 12 mils.

Following such immersion coating, the containers enter the post heat conditioning chamber, where they are heated at a controlled rate, on the order of 25°F per minute, to approach the upper temperature limit in the post heat chamber, 425°F in the case of the preferred coating powder. In this post heat conditioning chamber, the coating powder is fully and completely fused, but oxidative degradation of the powder is avoided by the controlled rate of heating, the time of heating, and the upper temperature limit. Among other things, this is thought to avoid localized overheating, which might be likely to cause such degradation.

Following the post heat conditioning chamber, the containers pass through a controlled cooling temperature, where the coated containers are permitted to cool to about 350°F.

The coated containers then pass through a second cooling stage, where they are cooled by forced air to just above the upper limit of the glass transition temperature of the coating powder. To effect maximum brilliance and clarity in the coating, the coated powder must be cooled through the glass transition temperature range as quickly as possible, and this is effected, by flowing liquid, such as water, over the coating to effect the temperature change as quickly as possible without causing coating damage due to impingement of spray or droplets.

A critical feature is to cool the coated glass containers without producing stress build up therein. This is particularly important in the quench stage. For this purpose, the quench liquid, generally water, is heated to a temperature above ambient, on the order of 130°F (in the range 115°–145°F generally) so that the cooling through the polymer crystallization zone (about 200°F to 165°F in the case of the preferred coating powder) is accomplished with a minimum of stress build up. Thereafter, the coated container surface may be oversprayed with a lubricant to minimize surface scratching and by action of the lubricity agent facilitate handling on equipment in bottlers and packers plants. The lubricant application is generally followed by a rinse and then a drying cycle to produce the final coated product, a container with a clear, brilliant plastic coating having a highly uniform thickness on the order of 3 to 6 mils.

The critical time temperature relationship is illustrated by a graph in Figure 17, in which the surface temperature of a glass container, determined by optical pyrometry, is traced as the container leaves the preheat conditioning chamber, proceeds to the dip station and is immersed, enters the post heat conditioning chamber, then the controlled cooling chamber (identified as the transition phase in the time temperature diagram), and finally the cooling, quench, lubricant, rinse and drying stages.

WHAT WE CLAIM IS:–

1. Bottle holding chuck including

(1) a horizontally disposed "U-shaped" member adapted to support a bottle resting thereon at a generally horizontal surface feature on the outer surface near the top of said bottle and

(2) a cap member adapted to fit loosely over the top of said bottle to prevent horizontal movement thereof,

said horizontally disposed member and said cap member being cooperatively arranged and adapted to carry a bottle positively positioned thereon and suspended therefrom with substantially all of said bottle below said surface feature free of contact with any part of said chuck.

2. Bottle holding chuck, as recited in Claim 1, wherein said cap member is closed at the top thereof to prevent the introduction of foreign materials into the interior of said bottle while said bottle is held on said chuck.

3. Bottle holding chuck, as recited in Claim 1, wherein said cap member includes means for introducing pressurized gas into the interior thereof.

4. Bottle holding chuck, as recited in Claim 1, wherein said cap member is vertically movable within a chuck support member.

5. Bottle holding chuck, as recited in Claim 4, wherein said cap member includes an upwardly extending section with a notch therein adapted to receive a horizontally disposed member adapted to retain said cap member in its raised position, said cap member being free to drop downward upon horizontal movement of said horizontally disposed retainer member and disengagement of said

member and said notch.

6. Bottle holding chuck, as recited in Claim 5, wherein said cap member is urged downwardly.

7. Bottle holding chuck, as recited in Claim 4, wherein a plurality of said chucks, including chuck support members, are mounted at spaced positions on a chuck bar adapted to engage bottles by a first horizontal movement of said bar and chucks toward said bottles and the open end of said "U-shaped" members with said cap members in the raised positions thereof, and then by a second vertically downward movement of said cap member over said bottles.

8. Bottle pick-up means including bottle holding chucks and chuck bar, as recited in Claim 7, and further including a second bar at a bottle pick-up position, said second bar disposed parallel to said chuck bar, with bottle neck supports suspended from said second bar at spaced positions directly opposite the open ends of said chuck "U-shaped" members, said second bar adapted to remain at said bottle pick-up position and said chuck bar comprising one of a plurality of such chuck bars each adapted to be transferred to and away from said pick-up station.

9. Bottle pick-up means, as recited in Claim 8, including chuck engaging means for simultaneously moving said second bar with said bottle neck supports and said chuck bar at said bottle pick-up position with said chuck "U-shaped" members toward one another to engage bottles' necks therebetween, means for then causing said cap members to drop over said bottles' necks and means for then causing said neck supports and "U-shaped" members to return to their starting positions.

10. Bottle pick-up means, as recited in Claim 9, wherein said chuck engaging means includes a first rack cammed by said chuck bar at said bottle pick-up position to move in unison therewith during the first movement thereof, a second rack associated with said second bar, a gear engaging both of said racks to cause simultaneous movement thereof in opposite directions.

11. Bottle pick-up means, as recited in Claim 10, further including means for returning said gear and said racks to the starting positions thereof.

12. Bottle pick-up means, as recited in Claim 9, wherein said caps are held in their raised positions by a horizontally disposed retainer member engaging slots in upwardly extended portions of each of said cap members, an end of said retainer member extending from said chuck bar and adapted to engage a camming member near the limit of the bottle engaging oppositely directed movement of said chuck bar and said second bar, said camming member causing said retainer member to disengage from said chuck cap member.

13. Bottle holding means including a chuck bar and bottle holding chucks, as recited in Claim 4, said chuck bar including end members with rollers adapted to rest on support members with said chuck bar suspended between said support members.

14. Bottle holding means, as recited in Claim 13, said end members further including transfer engaging means adapted to receive pushing means for transferring said bottle holding means along said support means.

15. Bottle transfer means including bottle holding means, as recited in Claim 14, combined with pusher means consisting of a pair of elongated pusher members with pusher dogs on each pusher member extending substantially away from said member and toward the other member of said pair, at spaced positions along the length thereof, locking-unlocking means for reciprocably rotating said elongated members about the axes thereof to effect engagement and disengagement of said pusher dogs in said end members, transfer means for reciprocably moving said elongated members longitudinally to effect transfer of said bottle holding means along said support member.

16. Bottle transfer means, as recited in Claim 15, wherein said end members include a pivotally mounted locking member spring biased to engage lock member receiving means spaced at pre-selected positions along said support member corresponding to the spaced positions of said pusher dogs on said elongated pusher members, said locking members being adapted to be cammed into non-locking position by engagement of said pusher dogs in said end members.

17. Bottle transfer means, as recited in Claim 15, wherein said elongated pusher members are cylindrical or tubular and rest on roller bearing members to facilitate rotational and longitudinal movement thereof.

18. Bottle transfer means, as recited in Claim 15, wherein each of said elongated pusher members consists of at least two lengthwise sections jointed together by mating male and female T-shaped thrust transmitting projections with clearance to permit radial movement therebetween through a limited arc.

19. Bottle transfer means, as recited in Claim 18, wherein said locking-unlocking means and said thrust transmitting T-shaped projections are adapted to cause said lengthwise sections to be rotated in unison in locking said dogs in said end sections while permitting said sections to be rotated independent of one another in the reverse or unlocking rotational movement.

20. Bottle transfer means, as recited in Claim 19, wherein said locking-unlocking means includes sequencing means to rotate at least one pair of sections of said elongated pusher members to the unlocked rotational position while said pusher members are in a lengthwise

transfer position intermediate their limits of longitudinal travel, said locking-unlocking means including further means to rotate the remaining pairs of sections of said elongated pusher members to the unlocked positions thereof as the elongated pusher members reach the limit of their longitudinal travel at the lengthwise transfer ending positions, said sequencing means also causing said locking-unlocking means to cause all of said elongated pusher members to be rotated into the locked, end member engaging position upon return of the elongated pusher members to the lengthwise transfer starting position.

21. Apparatus for applying a thermoplastic coating to glass bottles including:

(a) Bottle pick-up means, as recited in Claim 9, wherein said chuck bar includes end members with means for supporting said end members on a pair of pick-up station transfer track segments, means for moving said pick-up station transfer track segments between a lower pick-up position, at which said bottles are picked up to a higher transfer position from which said bottles are transferable to subsequent processing stations, at which position said pick-up station transfer track segments are aligned with other transfer track segments in said machine,

(b) a first pair of stationary transfer track segments adapted to transfer one of said chuck bars with chucks thereon to said pair of pick-up station transfer track segments,

(c) means for immersing said bottles suspended from said chuck bars, at a pre-selected position following transfer from said pick-up station track segments, in a fluidized bed of thermoplastic coating powder,

(d) a second pair of stationary transfer track segments adapted to receive bottles transferred from said coating station track segments, and

(e) means for transferring said chuck bars along all of said transfer track segments.

22. Apparatus, as recited in Claim 21, wherein said pick-up station transfer track moving means comprises a pair of crank arms with said pick-up station transfer track segments pivotally connected to one end thereof.

23. Apparatus, as recited in Claim 22, wherein said crank arms include means for maintaining said pick-up station transfer track segments in a horizontal position at all radial positions of said crank arms.

24. Apparatus, as recited in Claim 23, wherein said crank arms are adapted to move said pick-up station transfer track segments both horizontally toward subsequent processing stations and vertically to said transfer position.

25. Apparatus, as recited in Claim 22, wherein said chuck engaging means includes means for moving said crank arms transversely to effect said chuck bar movement.

26. Apparatus, as recited in Claim 24, wherein said chuck engaging means includes means for moving said crank arms transversely to effect said chuck bar movement.

27. Apparatus, as recited in Claim 21, further including a pair of coating station transfer track segments with means for raising and lowering same.

28. Apparatus, as recited in Claim 25, further including a pair of coating station transfer track segments with means for raising and lowering same.

29. Apparatus, as recited in Claim 21, including means for introducing pressurized gas in said chuck caps simultaneously with operation of said bottle immersing means.

30. Apparatus, as recited in Claim 21, said chuck bar transfer means comprising a pair of elongated pusher members with pusher dogs on each pusher member extending substantially away from said member and toward the other member of said pair, at spaced positions along the length thereof, locking-unlocking means for reciprocably rotating said elongated members about the axes thereof to effect engagement and disengagement of said pusher dogs in said end members, transfer means for reciprocably moving said elongated members longitudinally to effect transfer of said bottle holding means along said support member.

31. Apparatus, as recited in Claim 30, wherein said end members include a pivotally mounted locking member spring biased to engage lock member receiving means spaced at pre-selected positions along said support member corresponding to the spaced positions of said pusher dogs on said elongated pusher members, said locking members being adapted to be cammed into non-locking positions by engagement of said pusher dogs in said end members.

32. Apparatus, as recited in Claim 31, wherein:

(a) each of said elongated pusher members consists of at least two lengthwise sections jointed together by mating male and female T-shaped thrust transmitting projections with clearance to permit radial movement therebetween through a limited arc,

(b) said locking-unlocking means and said thrust transmitting T-shaped projections are adapted to cause said lengthwise sections to be rotated in unison in locking said dogs in said end sections while permitting said sections to be rotated independent of one another in the reverse of unlocking rotational movement,

(c) said locking-unlocking means includes sequencing means to rotate at least one pair of sections of said elongated pusher members to the unlocked rotational position while said pusher members are in a lengthwise transfer position intermediate their limits of longitudinal travel, said locking-unlocking means including further means to rotate the remaining pairs of sections of said elongated pusher members to the unlocked positions thereof as the elongated pusher members reach the limit of their

longitudinal travel at the lengthwise transfer ending positions, said sequencing means also causing said locking-unlocking means to cause all of said elongated pusher members to be rotated into the locked, end member engaging position upon return of the elongated pusher members to the lengthwise transfer starting position.

33. Apparatus, as recited in Claim 21, including a thermal conditioning chamber for treating bottles prior to engagement of said bottles in said pick-up means.

34. Apparatus, as recited in Claim 21, including at least one post-conditioning bottle thermal conditioning space, said second pair of stationary transfer track segments passing through said space.

ERIC POTTER & CLARKSON
Chartered Patent Agents
14 Oxford Street,
Nottingham.

For the Applicants

Printed for Her Majesty's Stationery Office by MULTIPLEX techniques ltd., St. Mary Cray, Kent. 1980. Published at the Patent Office, 25 Southampton Buildings, London WC2 1AY, from which copies may be obtained.

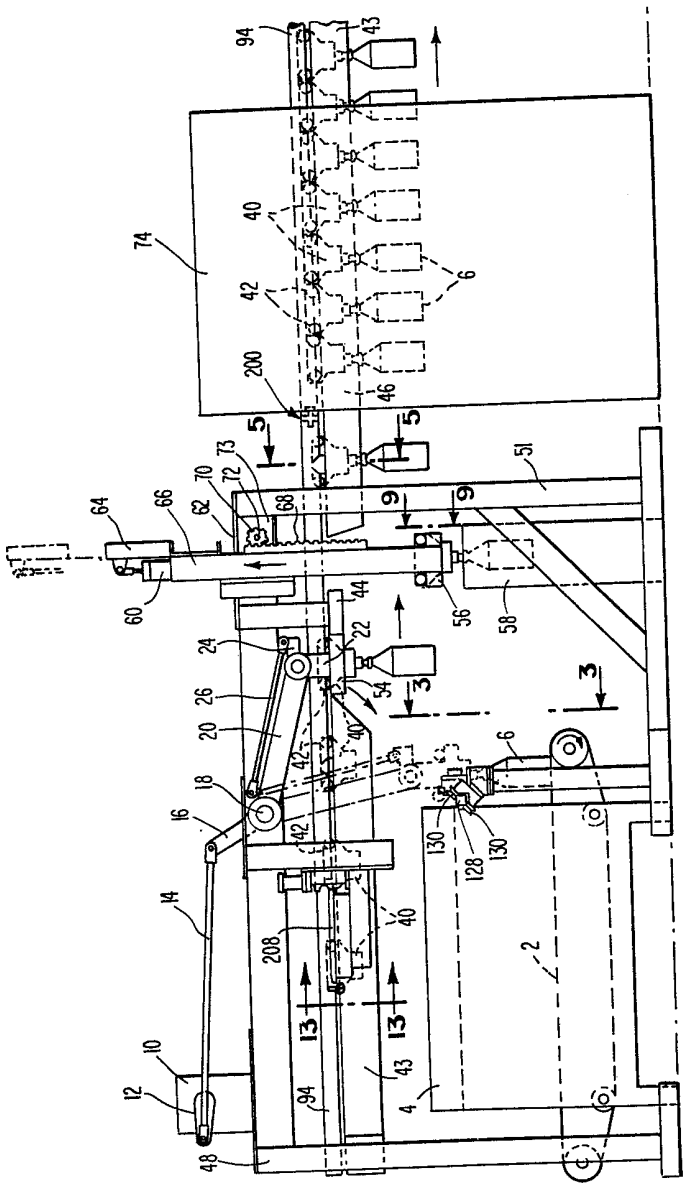
94
43
74
40
42
6
200
46
5
5
73
72
70
62
68
64
66
60
9
9
51
44
56
58
24
22
26
54
3
3
20
40
42
18
16
42
6
130
128
130
14
40
208
2
13
13
10
12
94
43
4
48

Fig. 1A

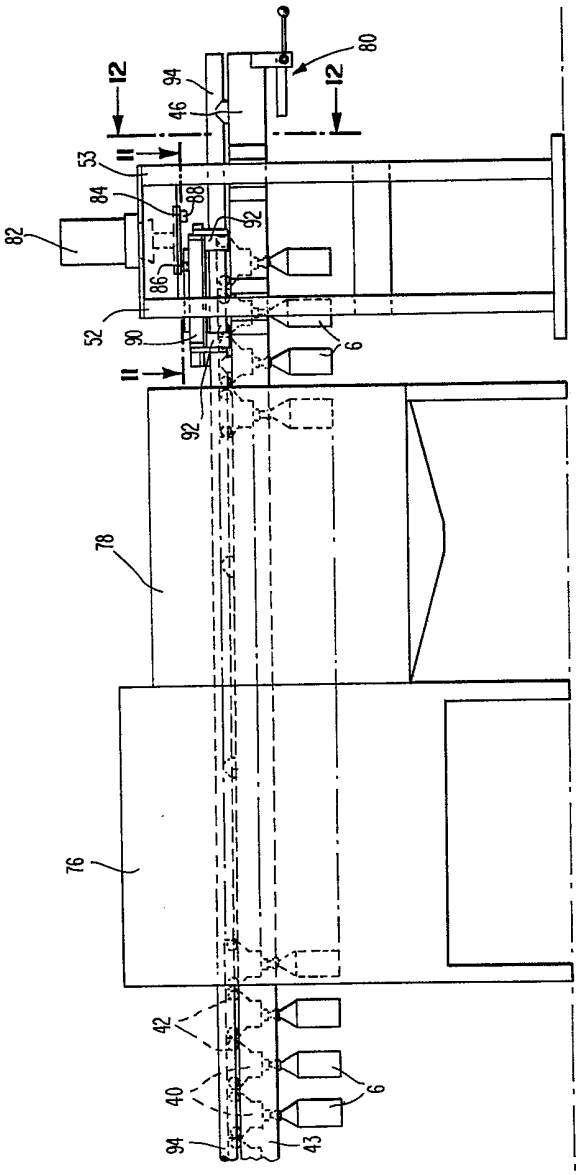

Fig. 1B

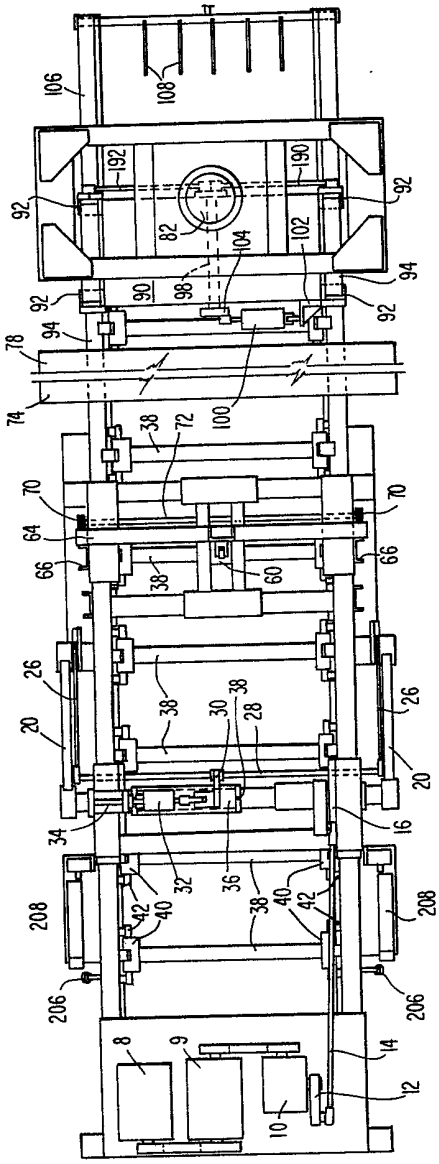

Fig. 2

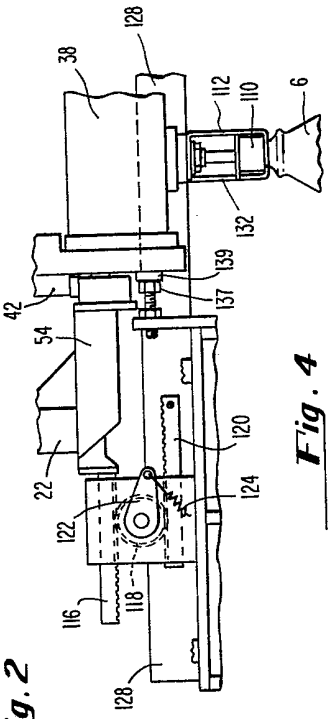

Fig. 4

Fig. 3

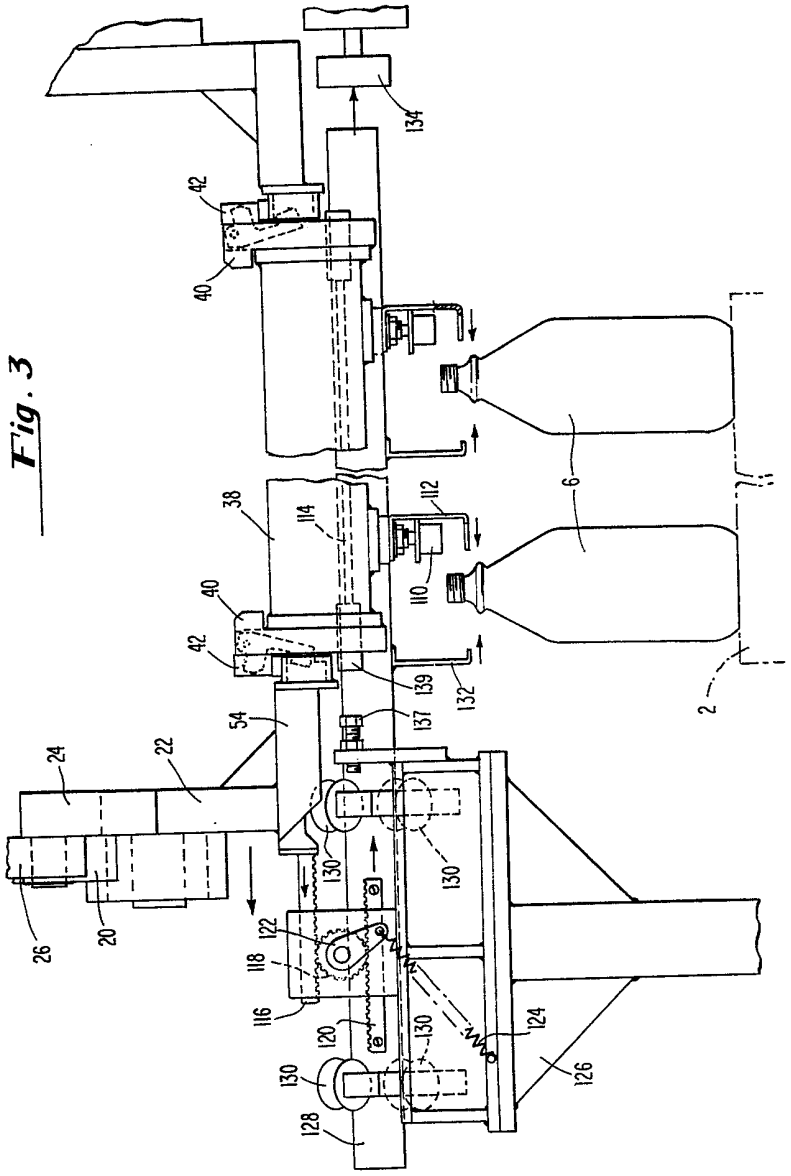
134
42
40
38
114
112
110
6
2
139
132
137
54
24
22
26
20
130
122
118
116
120
124
126
128

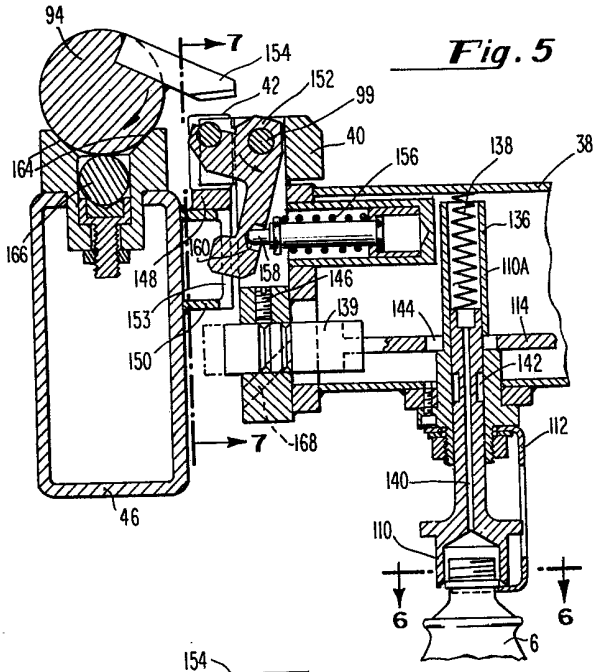

Fig. 5

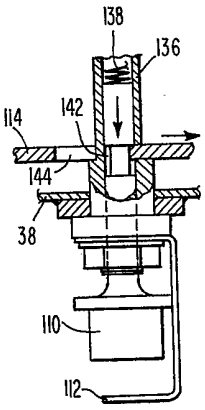

Fig. 8

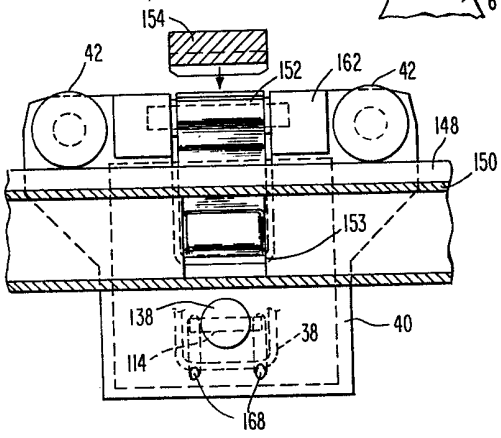

Fig. 7

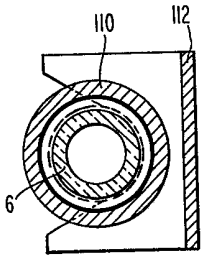

Fig. 6

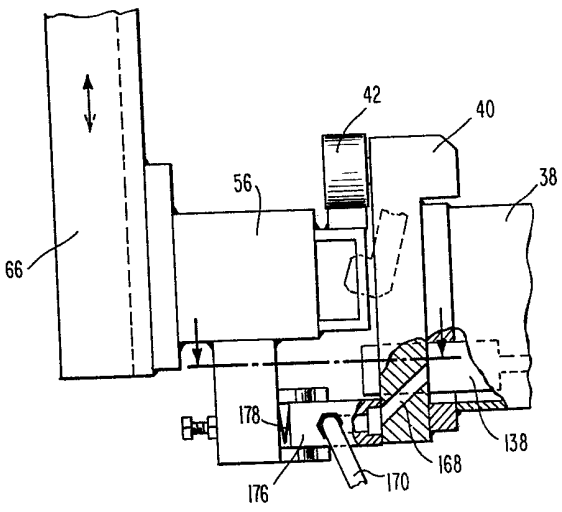
42
40
56
38
66
178
138
168
176
170

Fig. 9

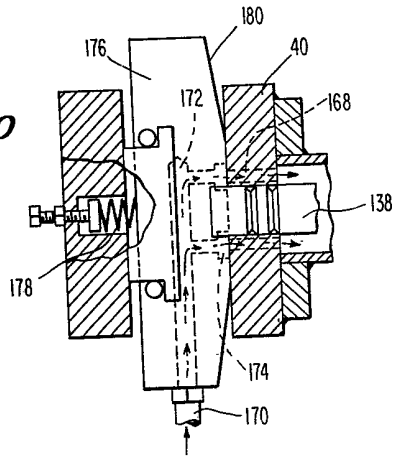
180
176
40
172
168
138
178
174
170

Fig. 10

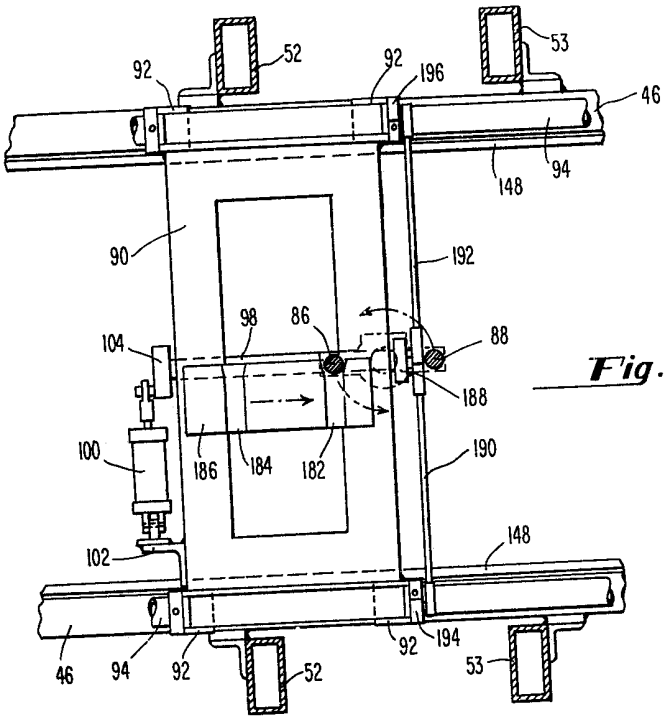
92
52
92
196
53
46
148
94
90
192
98
86
88
104
188
100
186
184
182
190
148
102
46
94
92
52
92
194
53

Fig. 11

Fig. 12

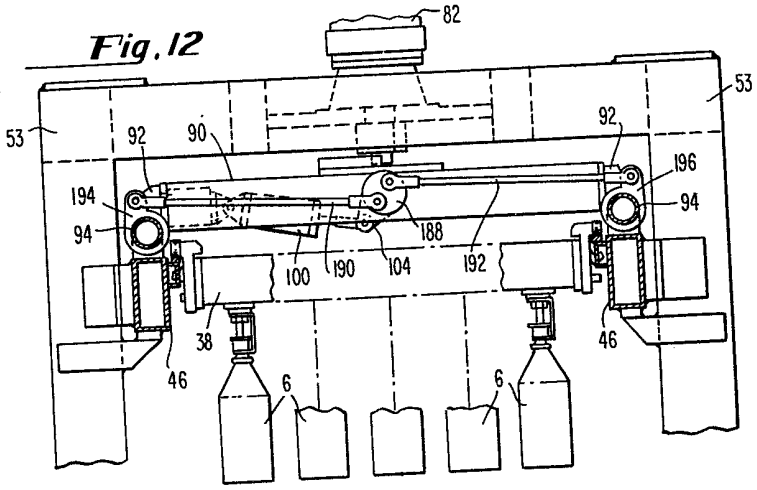
82
53
53
92
90
92
196
194
94
94
188
100
190
104
192
38
46
6
6
46

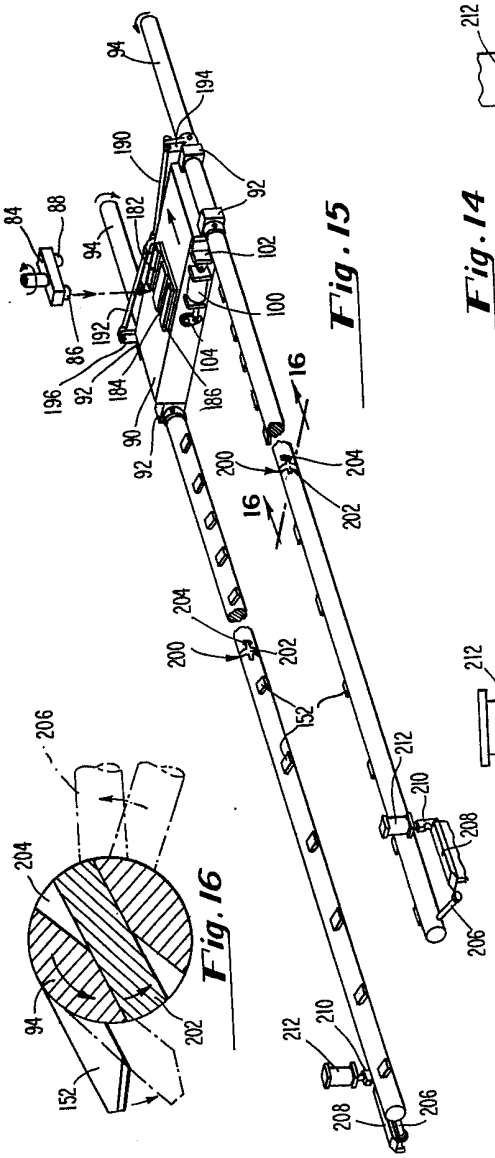

Fig. 15

Fig. 16

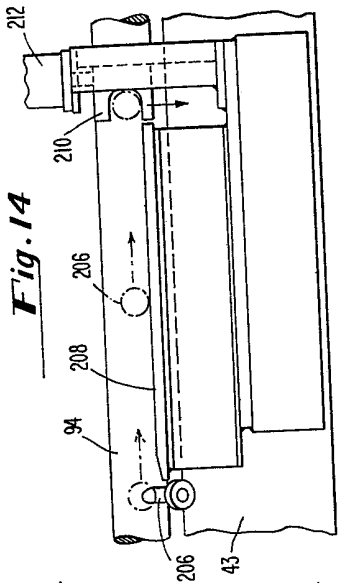

Fig. 14

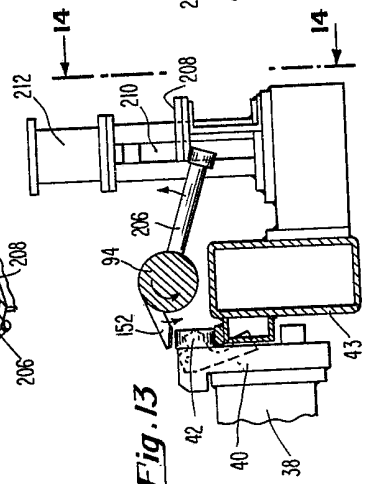

Fig. 13

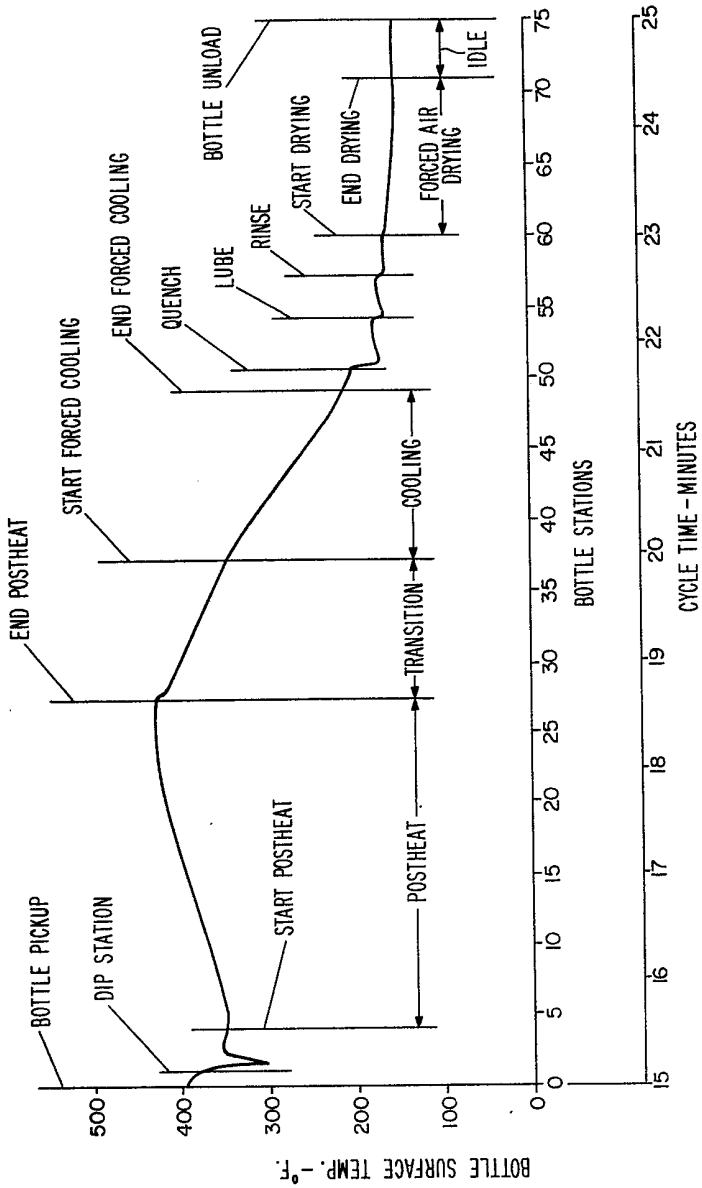
BOTTLE SURFACE TEMP. - °F.
500
400
300
200
100
0
BOTTLE PICKUP
DIP STATION
START POSTHEAT
END POSTHEAT
START FORCED COOLING
END FORCED COOLING
QUENCH
LUBE
RINSE
START DRYING
END DRYING
BOTTLE UNLOAD
POSTHEAT
TRANSITION
COOLING
FORCED AIR DRYING
IDLE
0 5 10 15 20 25 30 35 40 45 50 55 60 65 70 75
BOTTLE STATIONS
15 16 17 18 19 20 21 22 23 24 25
CYCLE TIME - MINUTES

Fig. 17