Nov. 7, 1961 H. M. LOEBER 3,007,349

VARIABLY SETTABLE STROKE DRIVE FOR PUMPS AND THE LIKE

Original Filed Jan. 9, 1956 2 Sheets-Sheet 1

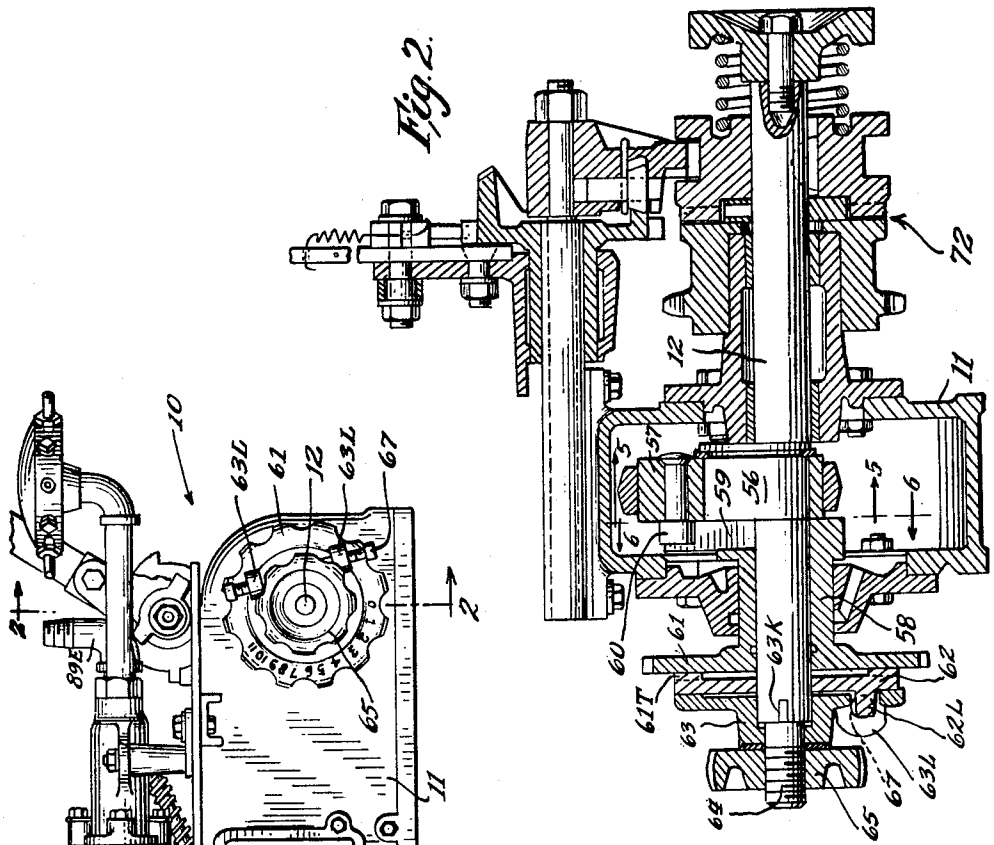

Fig. 1.

INVENTOR.
Herman M. Loeber
BY
Mann, Brown & McWilliams
Attys.

Nov. 7, 1961 H. M. LOEBER 3,007,349

VARIABLY SETTABLE STROKE DRIVE FOR PUMPS AND THE LIKE

Original Filed Jan. 9, 1956 2 Sheets-Sheet 2

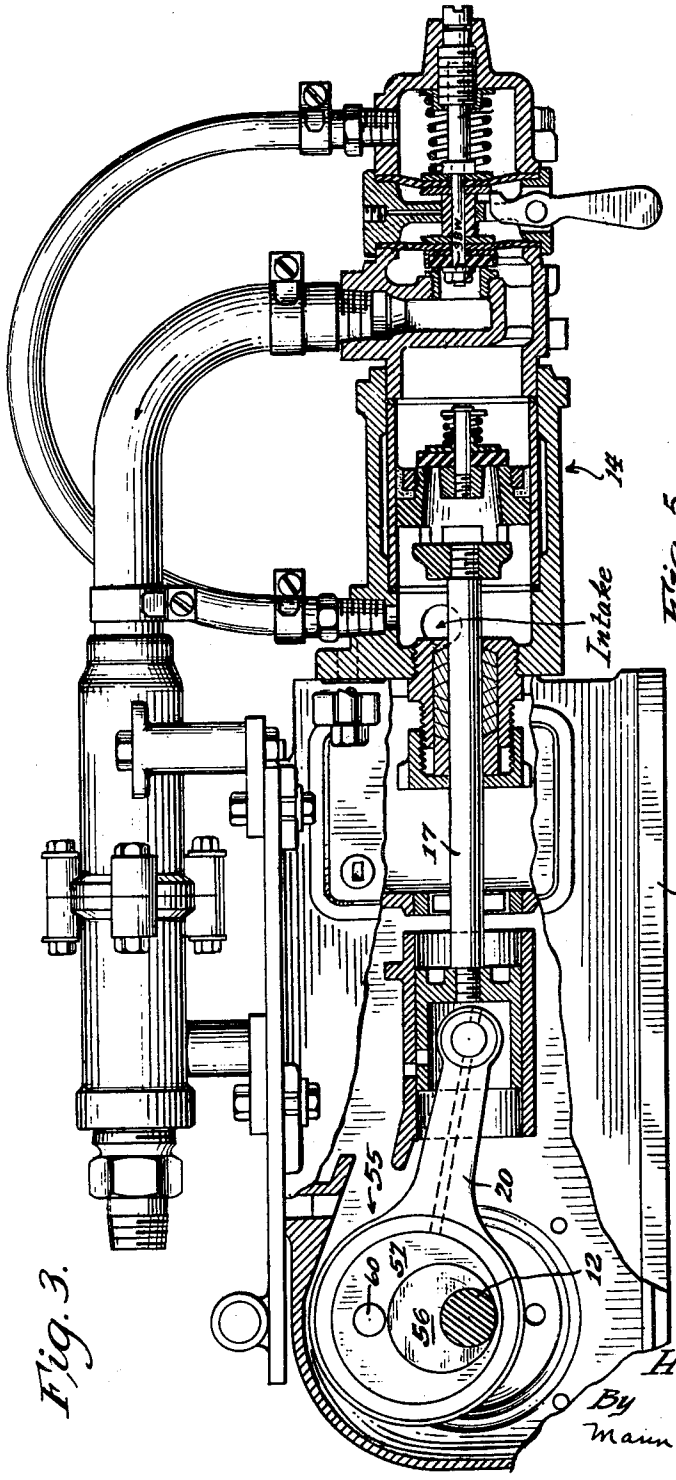

Fig. 3.

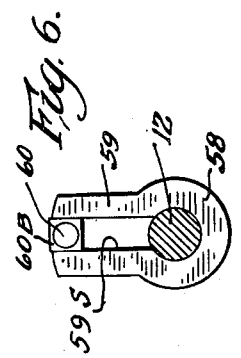

Fig. 6.

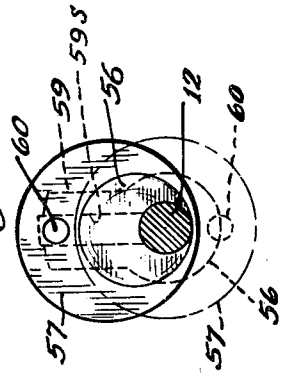

Fig. 5.

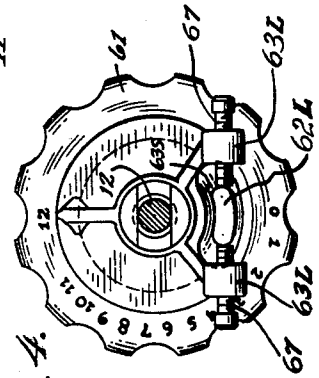

Fig. 4.

Inventor
Herman M. Loeber.
By
Mann, Brown & McWilliams
Attys.

United States Patent Office 3,007,349 Patented Nov. 7, 1961

3,007,349

VARIABLY SETTABLE STROKE DRIVE FOR PUMPS AND THE LIKE

Herman M. Loeber, Beatrice, Nebr., assignor to Dempster Mill Mfg. Co., a corporation of Nebraska

Original application Jan. 9, 1956, Ser. No. 558,079, now Patent No. 2,957,422, dated Oct. 25, 1960. Divided and this application Apr. 18, 1958, Ser. No. 730,750
2 Claims. (Cl. 74—571)

This application is a division of my co-pending application Serial No. 558,079, filed January 9, 1956, and now issued as Patent No. 2,957,422, patented October 25, 1960.

This invention relates to pumps adapted among other things for metering liquids, and particularly the invention relates to variable stroke adjustment means in such pumps.

The primary object of the present invention is to provide a positive displacement pump that is adjustable insofar as its metering output may be concerned and which provides for handling of the anhydrous ammonia as well as other liquids with a minimum of difficulty, and an important object related to the foregoing is to provide such a pump wherein the adjustment of metered output is attained in such a manner that the sudden pressure changes in the liquid are avoided, thus, to particularly adapt the same for metering liquified gases and to minimize flashing or bubbling of the liquid.

A further object of the present invention is to provide a pump of the aforesaid character in which the stroke adjustment for the pump is attained in such a way that the pump has a uniform movement in its intake and output strokes.

Other and further objects of the present invention will become apparent from the following description and claims, which by way of illustration, show a preferred embodiment of the present invention and the principles thereof, and what I now consider to be the best mode which I have contemplated applying these principles. Other embodiments of the invention embodying the same or equivalent principles may be used and structural changes may be made as desired by those skilled in the art without departing from the invention.

In the drawings:

FIG. 1 is a side elevational view of a metering pump embodying the invention;

FIG. 2 is a vertical sectional view at an enlarged scale taken substantially along the line 2—2 of FIG. 1;

FIG. 3 is a longitudinal vertical section through the pump cylinder and the operating mechanism;

FIG. 4 is a side elevational view of the stroke adjusting means; and

FIGS. 5 and 6 are sectional views taken respectively along the lines 5—5 and 6—6 of FIG. 2.

For purposes of the disclosure the invention is herein illustrated as embodied in the metering pump 10 that is adapted to be mounted on a farm implement to meter a liquified gas such as anhydrous ammonia. The metering pump 10 comprises a usual pump base 11 having a transverse drive shaft 12 rotatably mounted therein adjacent one end, the left hand end as viewed in FIG. 3, and at the other end of the pump base 11, a horizontally extending pump cylinder 14 is mounted. Within the cylinder 14, a reciprocable piston 21 is mounted and a piston rod 17 extends to the left out of the cylinder 14 and into the housing or base 11. The piston rod 17 is connected by cross head structure 18 and a connecting link 20 to the variable settable stroke mechanism of the present invention, as will be described. The cylinder 14 and piston 21 have valved inlet and outlet connections as described in my aforesaid parent application.

The drive of the present pump is adjustable in character so that the metering stroke of the pump may be variably

set. Thus, as shown in FIGS. 2 to 6, the connecting link 20 is driven from the shaft 12 by an adjustable double eccentric drive 55. This double eccentric drive comprises an inner eccentric 56 fixed on the shaft 12 and an outer eccentric 57 that is mounted on the eccentric 56 and which may be adjusted to different positions about the eccentric 56 so as to thereby variably adjust the total throw of the double eccentric drive 55. Such adjustment is accomplished through a preliminary adjusting sleeve 58 which has a radial slotted arm 59 extending therefrom within the crank case 11 and immediately adjacent to one side of the double eccentric 55. The slot 59S of the slotted arm 59 engages the squared end 60B of the pin 60 which is free to turn in the outer eccentric 57 so as to project from one side thereof and into such slot, and by rotating the sleeve 58 about the axis of the shaft 12, the position of the outer eccentric 57 on and with respect to the inner eccentric 56 may be adjusted, as will be evident in FIGS. 3 and 5, from a zero stroke adjustment to a maximum stroke adjustment.

Such adjustment of the sleeve 58 is accomplished externally of the crank case 11 by providing a relatively large outward flange 61 on the sleeve 58 and having a series of teeth 61T about its outer face in an annular relationship. These teeth are adapted to be engaged by similar opposed teeth on an intermediate adjustment plate 62 that is disposed on the shaft, and outwardly of the plate 62 a head 63 is mounted on the shaft for slidable movement, but the head 63 is keyed at 63K against rotation relative to the shaft. The end of the shaft 12 is threaded at 64 and a nut 65 in the nature of a hand wheel is threaded onto the end of the shaft so that the members 63 and 62 may be urged to the left into the proper interlocked relationship.

The head 63 and the intermediate plate 62 are arranged to give what may be termed fine or vernier adjustment of the stroke of the pump, and in accomplishing this the plate 62 has a projecting lug 62L thereon that extends through a slot 63S in the adjacent flange of the head 63. This flange of the head 63 has a pair of lugs 63L formed thereon and screws 67 are threaded through these lugs to engage opposite sides of the lug 62L of the plate 62. With this arrangement the rotative position of the outer eccentric 57 may be given a rough adjustment by shifting the position of the sleeve 58 to a point near the adjusted position that is desired, after which the teeth 61T and the related teeth on the plate 62 may be moved into axial engagement by tightening of the hand wheel or nut 65. The desired accurate adjustment of the pumping stroke may then be attained by rotative adjustment of the intermediate plate 65 with respect to the head 63, this being accomplished by the adjusting screws 67.

With the arrangement that is thus provided, the pumping stroke of the pump may be accurately adjusted so as to attain the desired metered output, and this adjustment is attained with the present strucure in such a way that the piston has a gradual acceleration and deceleration at both ends of its pumping stroke. This minimizes sudden changes in pressure so as to thereby prevent any tendency toward flashing or vaporization of the liquified gas.

At the other or right hand end of the shaft 12 as shown in FIG. 2, a remotely controlled clutch 72 is provided, and this structure is described in detail in my aforesaid parent application.

It will also be apparent that the present invention provides a metering pump of the aforesaid character that is simple and economical in structure and which is adapted for upkeep and servicing by the usual farm worker.

Thus while I have illustrated and described the invention in a particular embodiment, it will be recognized that changes and variations may be made within the spirit and scope of the invention.

I claim:

1. In a mechanism for converting rotary motion to linear reciprocating motion in a constantly driven device such as a pump, walls defining a closed crank case having a rotatable shaft extended through opposite side walls and reciprocable element extended through another wall for reciprocation along a path normal to said shaft, an inner eccentric fixed on said shaft within said crank case and an outer eccentric mounted on and adjustable about said inner eccentric, means including a connecting link having one end embracing said outer eccentric and the other end pivotally connected to said reciprocable element for reciprocating said element upon rotation of said outer eccentric, and stroke adjusting means comprising a sleeve mounted on said shaft and extending through one side of said crank case, means including an arm on said sleeve within said crank case for adjusting said outer eccentric about said inner eccentric, means located outside of the crank case for connecting the other end of said sleeve to said shaft in any desired position of rotative adjustment, bearings carried on said opposite side walls with one of said bearings having the shaft rotatably mounted directly therein and the other one of said bearings having said sleeve rotatably mounted therein and serving to support the shaft through the intermediary of said sleeve.

2. In a mechanism for use in a pump or the like for converting a rotary motion to linear reciprocating motion, walls defining a closed crank case having a rotatable shaft extended through opposite side walls and reciprocable element extended through another wall for reciprocation along a path normal to said shaft, an inner eccentric fixed on said shaft within said crank case and an outer eccentric mounted on and adjustable about said inner eccentric, means including a connecting link having one end embracing said outer eccentric and the other end pivotally connected to said reciprocable elemet for reciprocating said element upon rotation of said outer eccentric, and stroke adjusting means comprising a sleeve mounted on said shaft and extending through one side of said crank case, means including an arm on said sleeve within said crank case for adjusting said outer eccentric about said inner eccentric, a disk on the outer end of the sleeve for rotating the sleeve, radially extending means outside of the crank case fixed to the shaft adjacent to said disk, and means for fixing said disk and said radially extending means together in different positions of rotative adjustment.

References Cited in the file of this patent

UNITED STATES PATENTS

540,394	Leitch	June 4, 1895
1,091,496	Fox	Mar. 31, 1914
2,036,626	Garratt	Apr. 7, 1936
2,259,713	Valentine	Oct. 21, 1941
2,288,963	Von Tavel	July 7, 1942
2,313,551	Hurlbut	Mar. 9, 1943
2,348,958	Celio	May 16, 1944
2,478,500	Parsons	Aug. 9, 1949
2,503,907	Hefler	Apr. 11, 1950
2,551,359	Bannow et al.	May 1, 1951
2,592,237	Bradley	Apr. 8, 1952
2,640,425	Saalfrank	June 2, 1953
2,642,937	Hallden	June 23, 1953
2,767,588	Drury	Oct. 23, 1956
2,862,405	Muller	Dec. 2, 1958

FOREIGN PATENTS

46,878	Sweden	Apr. 21, 1920
129,640	Austria	Apr. 15, 1932
742,570	Germany	Dec. 7, 1947
613,632	Great Britain	Dec. 1, 1948