Oct. 30, 1951 N. W. WHITE 2,573,526

PLAY PEN

Filed April 6, 1948 2 SHEETS—SHEET 1

Fig. 1.

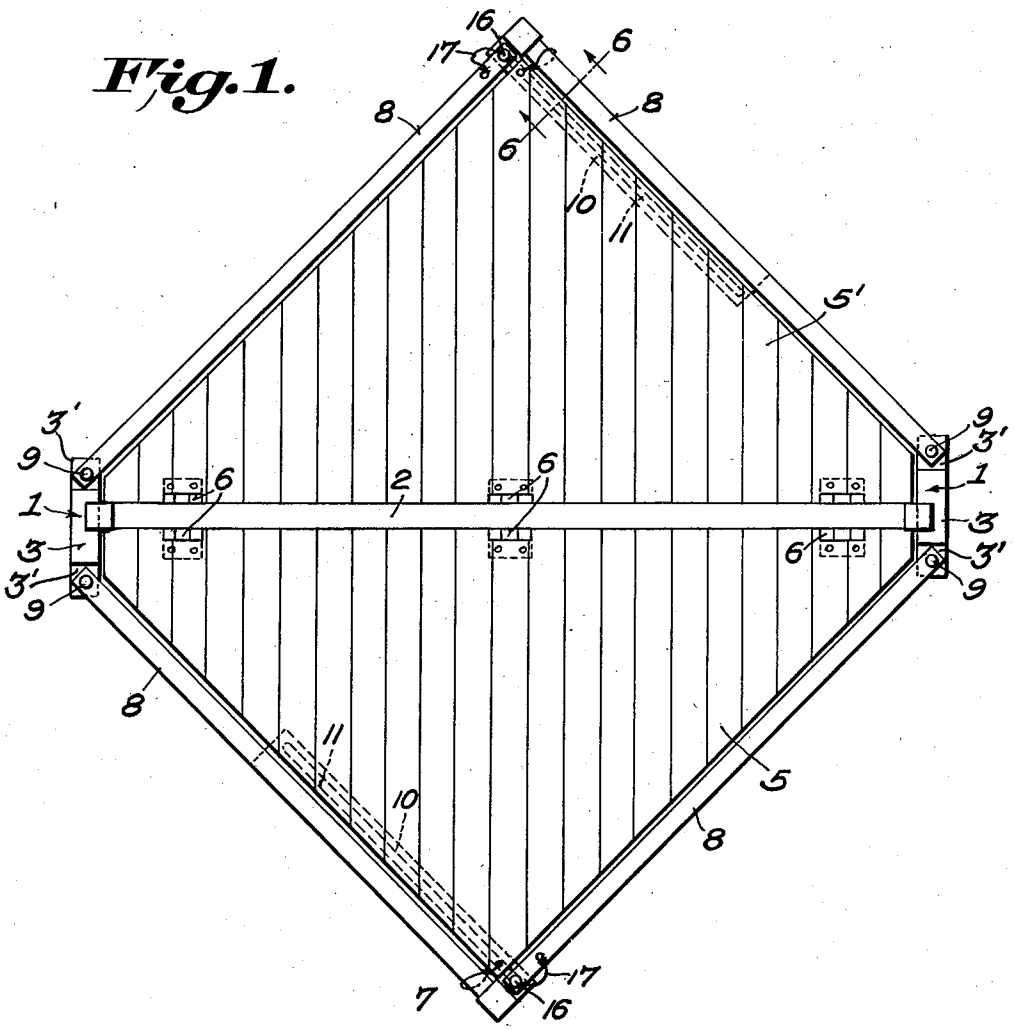

Fig. 2.

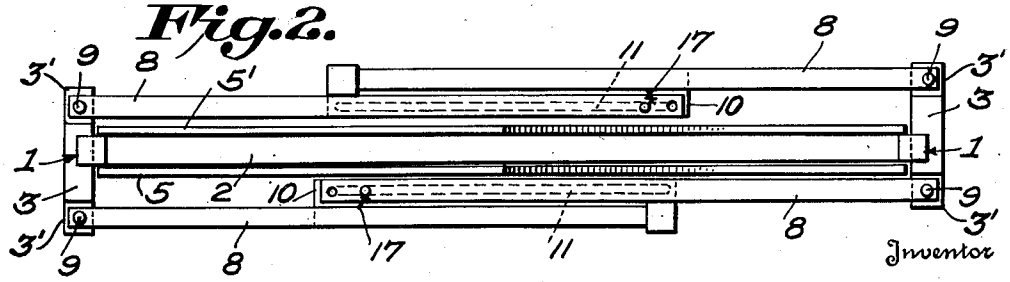

Inventor

NORMAN W. WHITE,

By

Semmes, Keegin, Robinson & Semmes

ATTORNEYS

Oct. 30, 1951 N. W. WHITE 2,573,526

PLAY PEN

Filed April 6, 1948 2 SHEETS—SHEET 2

Fig. 3.

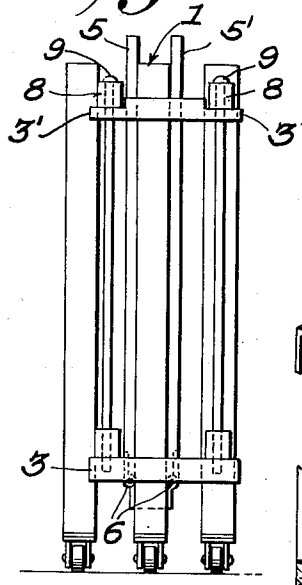

Fig. 8.

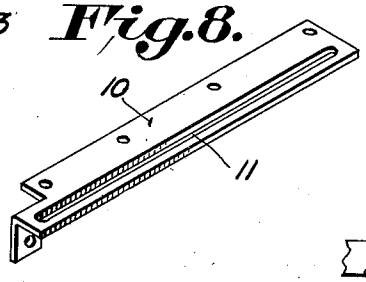

Fig. 6.

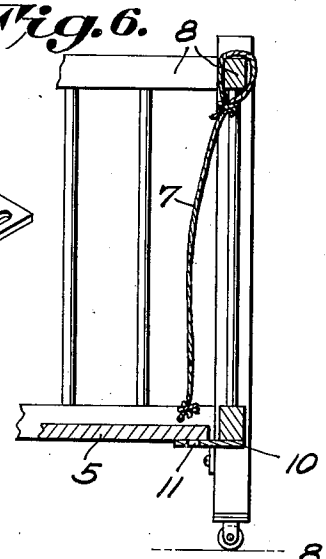

Fig. 7.

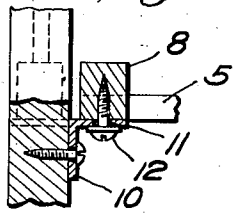

Fig. 5.

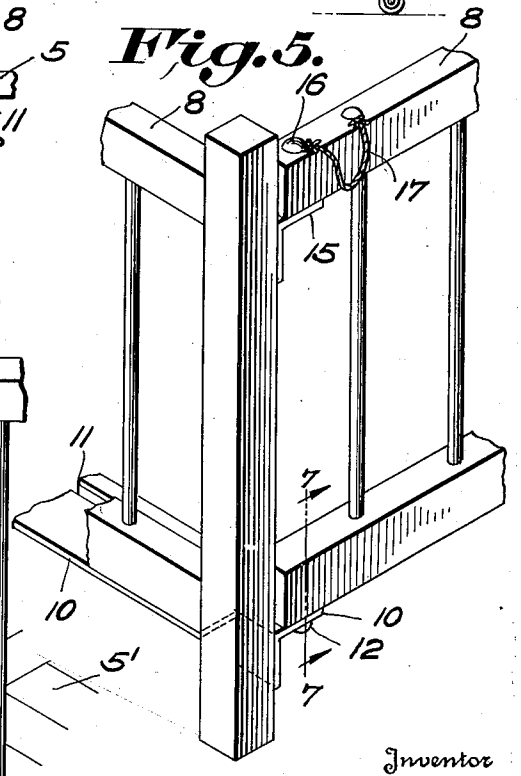

Fig. 4.

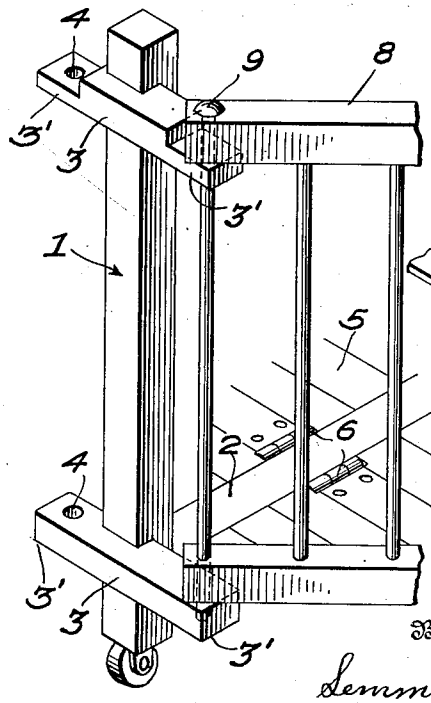

Inventor

NORMAN W. WHITE,

By

Semmes, Keegin, Robinson & Semmes

ATTORNEYS

Patented Oct. 30, 1951

2,573,526

UNITED STATES PATENT OFFICE

2,573,526

PLAY PEN

Norman W. White, Salem, Mass.

Application April 6, 1948, Serial No. 19,311

2 Claims. (Cl. 5—99)

1

This invention relates to a play pen for children, and more especially to a foldable play pen.

One of the objects of the present invention is to provide a play pen for children which may be economically produced.

Another object of the present invention is to provide a play pen of the character described which may be readily folded and stored.

Still another object of the present invention is to provide a play pen of the character described one-half of which may be folded or opened independent of the other half thereby enabling a play area of variable size to be provided.

A further object of the present invention is to provide a play pen of the character described which does not require stooping during either the folding or opening operation.

With these and other objects in view which may be incident to my improvements, the invention consists in the procedural steps and structure to be hereinafter set forth and claimed with the understanding that the necessary elements comprising this invention may be varied in construction, proportion and arrangement without departing from the spirit and scope of the appended claims.

In general, the invention relates to a play pen, for children, of rectangular shape provided with a floor and four slatted wall portions. The floor is formed of two triangularly-shaped portions, the base edges of which are hinged to opposite sides of a center piece. A pair of the slatted walls are also pivotally attached to each of the extremities of the center piece in such a manner that the side walls forming each pair may be folded on opposite sides of the center piece. This places one side wall of each pair on the same side of the center piece. They may be opened to form a triangular space.

The advantage of this structure is immediately apparent because it enables the floor sections and the slatted walls to be folded against the center piece thereby providing a compact package for transportation and storage. A cord is attached to each of the floor portions to enable them to be raised or lowered without stooping. One of the slatted walls on each side of the center piece is provided with a slotted track and the outer extremity of each of the remaining sides is provided with a pin which rides in the slotted track of the adjacent slatted wall. This structure enables the walls forming each triangular space to be closed against the center piece or opened by exerting pressure on only one of each adjacent pair of side walls. This structure, therefore, shortens the folding or opening operation.

2

In addition, this structure is very advantageous because it enables one-half of the pen to be used in cases in which the available area is restricted or where the child is too young to require a larger area. In such situations only one portion of the floor and two of the walls of the pen are opened.

In the drawings:

Figure 1 is a top plan view in extended position of a play pen embodying the present invention.

Figure 2 is a top plan view of the play pen shown in Figure 1 in closed position.

Figure 3 is a side elevational view of the play pen in closed position shown in Figure 2.

Figures 4 and 5 are fragmental views in side elevation of portions of the play pen in open position.

Figure 6 is a view taken along the lines 6—6 of Figure 1.

Figure 7 is a view taken along the lines 7—7 of Figure 5.

Figure 8 is a side elevational view of a bracket.

For purposes of illustration, the drawings disclose a play pen embodying the present invention. This structure is provided with a center piece which comprises an upright pair of spaced standards 1 joined by a horizontally extending member 2. Mounted on each of these standards 1 is a pair of spaced horizontally extending brackets 3, having extensions 3' which extend beyond the standard. These extensions 3' are provided with apertures 4.

Floor portions 5 and 5' are attached to the horizontally extending center member 2 by a plurality of hinges 6 which pivot upwardly from the horizontal. These triangularly-shaped floor portions 5 and 5' are made of planking or other suitable material and may be protected by a cover. A cord 7 is attached to each of the floor portions 5 and 5' and enable the floor portions to be individually raised without stooping.

The floor portions 5 and 5' are enclosed by slatted wall portions 8. These wall portions 8 are pivotally attached in pairs to the two upright standards 1. As best shown in Figure 4, this is accomplished by attaching one extremity of each side wall 8 to a pair of side brackets 3 mounted on a selected standard 1 by means of a rod 9 which passes through aligned apertures in the upper and lower portion of the extremity of the wall portion 8 and the corresponding aligned apertures 4 in the extensions 3' of the brackets 3. This arrangement permits a pair of wall portions 8 to be mounted on each of the upright standards 1. The members forming each pair may be separated and folded on opposite sides of the horizon-

tal center member 2 and opened outwardly to form one play section of the play pen.

A bracket 10 is secured beneath the bottom railing of one of the pairs of wall portions 8 forming each of these play sections. This bracket 10 is slotted as shown at 11 in Figure 8 to form a track. A pin 12 is secured to the lower portion of each of the remaining side wall portions 8. As best shown in Figure 7 each of these pins extends downwardly and projects into the slot 11 of the bracket 10, which is secured to the remaining member of the pair, the abutting extremities of which form the play section. This enables the pen to be opened and closed by pressure on only one of the wall portions 8 forming each section.

This track and pin arrangement also serves to secure together the lower portions of the abutting side wall members 8. The upper portions of each pair of abutting side wall members forming the two play areas are secured by a bracket 15 attached to one wall member 8, and a pin 16 which is secured to the remaining wall member 8 of each pair of wall portions by a cord 17. Each pin 16 extends downwardly through an aperture in the wall member 8 to which it is attached by the cord 17 into an aligned aperture in the bracket 15. The pin is removed before the pen is folded.

In practice, the play pen is folded by successively raising the floor portions 5 and 5' against the center piece by exerting lifting pressure on the cords 7. The side wall portions 8 on one side of the center piece may then be closed by removing the pin 16 from the bracket 17 and exerting pressure on one of the side walls. The remaining sides can be closed against the center piece by similar action.

As shown in Figures 2 and 3, the folded article is only a little wider than the center piece and can be readily transported and stored. It can be opened by being placed in a suitable space and exerting pressure on one of the side wall portions 8. This opens one-half of the pen and the corresponding floor portion can then be lowered. It is supported by the bracket 10. It is not necessary to open the remainder of the pen unless it is desired to do so. In the event that a covering is used on a floor the pen may be folded without removing the cover. Each pair of wall portions 8 are secured against accidental collapse by insertion of the pins 16.

I claim:

1. A play pen having a floor, comprising a pair of upright standards joined by a horizontally extending member which forms the center piece of the play pen floor, a bracket mounted on the upper portion and a bracket mounted on the lower portion of each upright, a pair of extensions on each bracket extending from opposite sides of the upright upon which it is mounted and at right angles to the center piece, each pair of extensions on the same side of each upright being

in opposed relation, four side walls for the play pen, means to pivotally mount one end of each side wall upon a pair of opposed extensions to provide a pair of side walls on each side of the center piece, means to fasten the remaining ends of the pair of side walls on each side of the center piece together to form an inclosure in the shape of a triangle on each side of the center piece, a pair of triangular shaped floor portions and means to hinge one side of each floor portion to the opposite sides of the center piece, each floor portion being of the proper size to cover the area of the triangle formed by the pair of side walls on each side of the horizontally extended member.

2. A play pen having a floor, comprising a pair of upright standards joined by a horizontally extending member which forms the center piece of the play pen floor, a bracket mounted on the upper portion and a bracket mounted on the lower portion of each upright, a pair of extensions on each bracket extending from opposite sides of the upright upon which it is mounted and at right angles to the center piece, each pair of extensions on the same side of each upright being in opposed relation, four side walls for the play pen, means to pivotally mount one end of each side wall upon a pair of opposed extensions to provide a pair of side walls on each side of the center piece, means to fasten, after abutment, the remaining ends of the pair of side walls on each side of the center piece together to form an inclosure in the shape of a triangle on each side of the center piece, said fastening means comprising a bracket containing a slot on a lower portion of the extremity of one of the abutting side walls forming each triangle, and a fixed pin mounted in the remaining abutting end of each pair of side walls, the pin projecting into the slot to slidably secure the side together, a second bracket mounted on the first mentioned side walls above the first mentioned bracket and a removable pin mounted on the upright portions of each of the remaining side walls, each pin being adapted to fit into an aperture in the respective bracket with which it is associated to hold the upper portions of the abutting side walls together, a pair of triangular shaped floor portions for the play pen, and means to hinge one side of each floor portion to opposite sides of the center piece, each floor portion being of the proper size to cover the area of the triangle formed by the pair of side walls on each side of the horizontally extending member.

NORMAN W. WHITE.

REFERENCES CITED

The following references are of record in the file of this patent:

UNITED STATES PATENTS

Number	Name	Date
2,041,509	Byrne	May 19, 1936
2,308,608	Kennedy	Jan. 19, 1943