Dec. 20, 1938. W. TRAUTNER 2,141,115

PILOT LIGHT ASSEMBLY

Filed Jan. 10, 1938 2 Sheets-Sheet 1

Fig. 1.

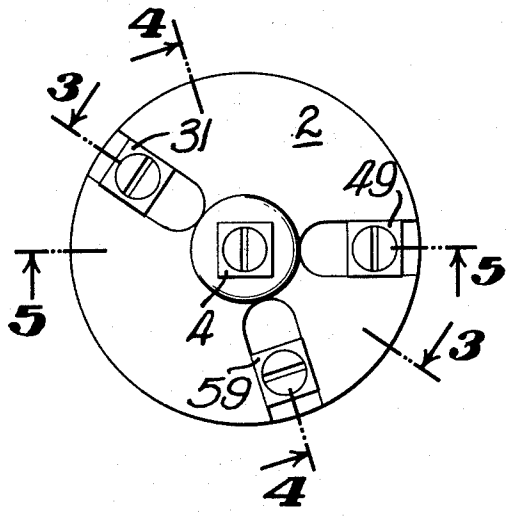

Fig. 3.

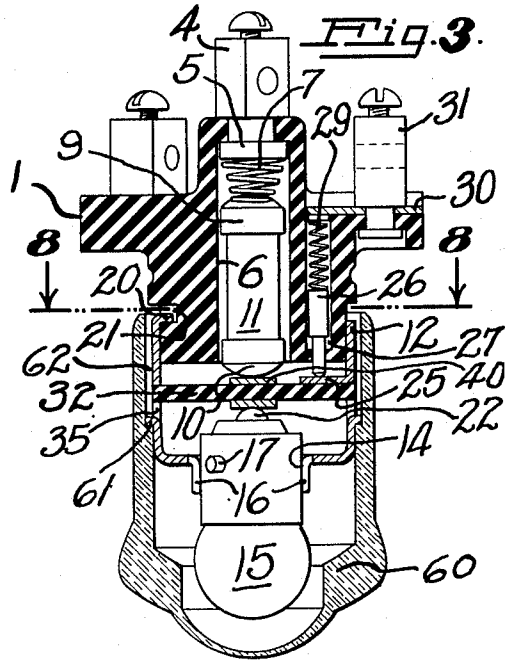

Fig. 2.

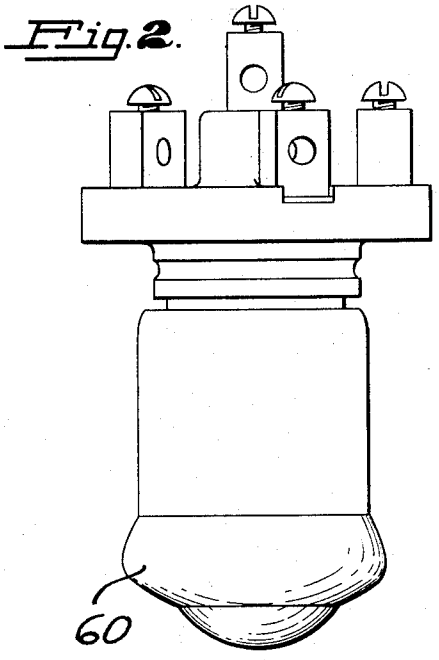

Fig. 4.

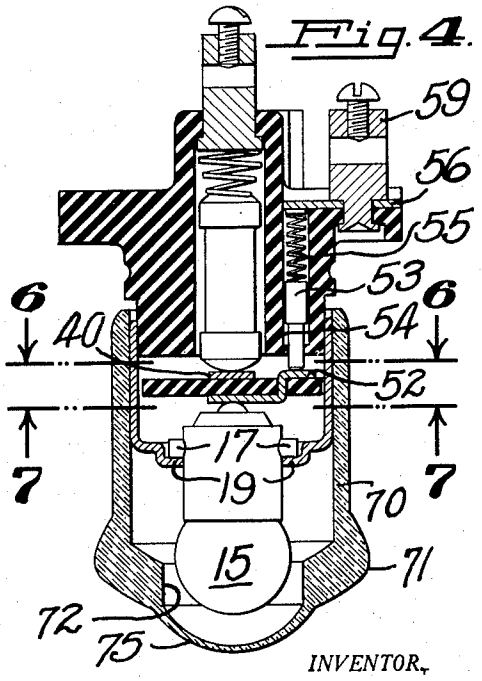

INVENTOR,
WAGN TRAUTNER.
BY Lippincott & Metcalf
ATTORNEYS.

Dec. 20, 1938. W. TRAUTNER 2,141,115

PILOT LIGHT ASSEMBLY

Filed Jan. 10, 1938 2 Sheets-Sheet 2

Fig. 5.

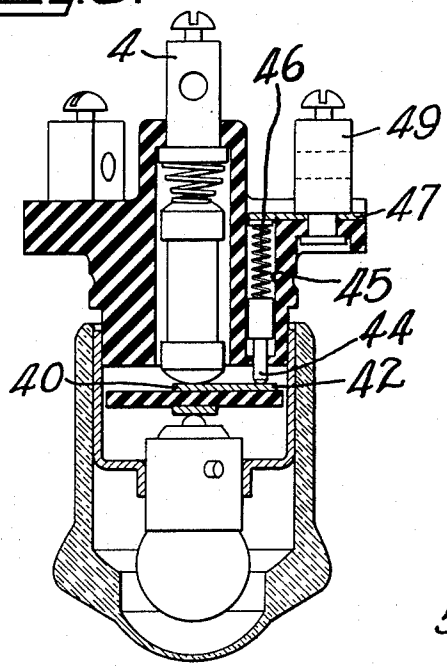

Fig. 6.

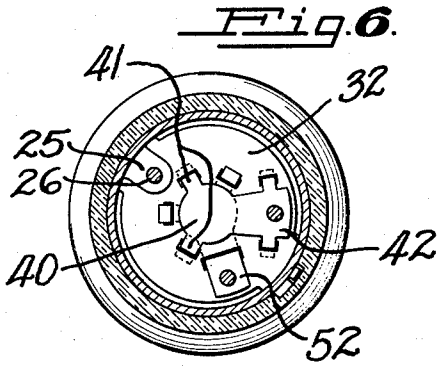

Fig. 7.

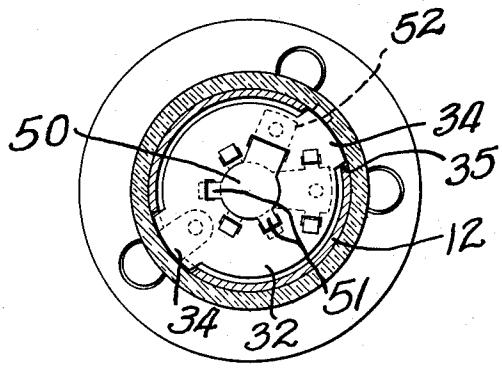

Fig. 9.

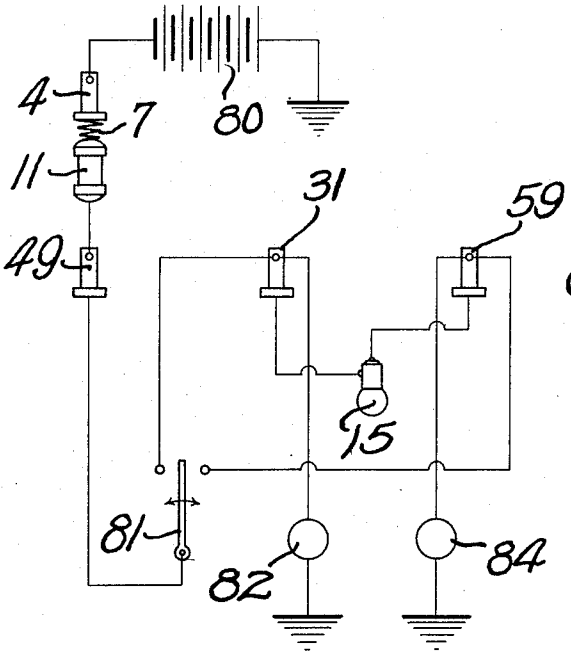

Fig. 8.

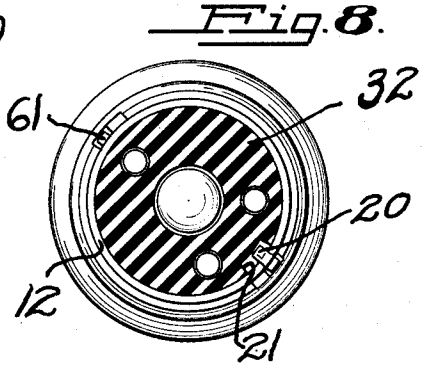

INVENTOR,
WAGN TRAUTNER.
BY Lippincott & Metcalf
ATTORNEYS.

Patented Dec. 20, 1938 2,141,115

UNITED STATES PATENT OFFICE

2,141,115

PILOT LIGHT ASSEMBLY

Wagn Trautner, Springdale, Ohio, assignor to E. H. Kueffer, Oakland, Calif.

Application January 10, 1938, Serial No. 184,189

1 Claim. (Cl. 177—329)

My invention relates to a pilot light assembly, and more particularly to a pilot light assembly of small size and incorporating a fuse or similar device therein.

Among the objects of my invention are: To provide a compact fuse block and pilot light assembly; to provide a pilot light assembly containing a fuse and lamp, wherein both lamp and fuse may be readily removed; to provide a compact pilot light assembly suitable for installation in alternatively energized circuits; to provide a unitary pilot light assembly containing a fuse and pilot light which can be disassembled to remove at will either the lamp or fuse; and to provide a unitary compact pilot light assembly suitable for use in a monitoring system, such as is described in the application of Wagn Trautner and Herbert E. Metcalf for United States Letters Patent on a "Vehicle signalling and monitoring system", Serial No. 170,828, filed October 25, 1937.

Other objects of my invention will be apparent or will be specifically pointed out in the description forming a part of this specification, but I do not limit myself to the embodiment of the invention herein described, as various forms may be adopted within the scope of the claim.

Referring to the drawings:

Fig. 1 is a top plan view of a preferred form of my invention.

Fig. 2 is a side view of the device illustrated in Fig. 1.

Fig. 3 is a longitudinal view partly in section and partly in elevation of the embodiment of my invention shown in Fig. 2, and taken as indicated by the line 3—3 in Fig. 1.

Fig. 4 is a longitudinal sectional view, partly in elevation, taken as indicated by the line 4—4 in Fig. 1.

Fig. 5 is a longitudinal sectional view, taken as indicated by the line 5—5 in Fig. 1.

Fig. 6 is a view partly in cross section and partly in elevation, taken as indicated by the line 6—6 in Fig. 4.

Fig. 7 is a view partly in cross section and partly in elevation, taken as indicated by the line 7—7 in Fig. 4.

Fig. 8 is a view partly in cross section and partly in elevation, taken as indicated by the line 8—8 in Fig. 3.

Fig. 9 is a circuit diagram, showing one use of the pilot light assembly of my invention.

In the Trautner and Metcalf application referred to above, the inventors therein showed that a single pilot lamp can be used to give a telltale indication upon the closure of either one of two circuits containing current consuming devices, and the invention in that prior application was concerned with the use of such a single telltale or pilot lamp in an automatic signalling system indicating right and left turns, or in similar circuits.

The present invention is directed solely to a compact assembly containing a pilot lamp and a fuse, wherein either the pilot lamp or fuse may be removed and inserted either separately or together, and also wherein contact pressures of both lamp and fuse are supplied by a single resilient member.

My invention may be more fully understood by direct reference to the drawings.

Referring directly to Figs. 1 to 8 inclusive, a base 1 is preferably molded of plastic material to provide a bottom surface 2 upon which binding posts or similar devices may be mounted in the embodiment shown in the first eight figures. There are four binding posts mounted upon the base, and these will be referred to in the order of description of connetced structure. Central binding post 4 has a contact portion 5 entering an axial and preferably cylindrical cavity or recess 6 in the base. Affixed to the contact portion 5 is a resilient spring 7 extending into the cavity 6. The outer end of this spring bears against one end 9 of a fuse 11 of the customary automotive type, end 10 being supported on the fuse body 11, which is usually of glass, both ends being alike in contour. I prefer to form the recess in the base 1 so that a standard automotive fuse just projects beyond the central cavity 6 of the base 1 when under a sufficient stress to slightly compress spring 7.

Mounted on base 1 and removably attached thereto is a lamp supporting shell 12 of conducting material having a central aperture 14 therein accommodating a standard automotive lamp 15. Aperture 14 is provided with opposite openings 16 to allow the entrance of base pins 17 to lamp 15, and is also provided with opposite indentations 19 so that the lamp may be inserted and turned with pins 17 resting in indentations 19, as shown in Fig. 4, whereby the lamp 15 when inserted will not turn unless the pins 17 are pushed out of the indentations 19.

I prefer to removably attach lamp shell 12 to the base by means of a projection 20 fitting in J-slots 21 in base 1. Thus the shell is removed first by a rotating motion and then by longitudinal withdrawal.

Automotive lamps are provided in addition to the cylindrical conductive walls of the base with

a central contact 22, and when the lamp is mounted as described this central contact will be in line with the axis of fuse 11.

Electrical contact to the lamp supporting shell 12 is made by forming, as part of the shell, an inwardly projecting lip 25 lying in the path of a shell plunger 26 lying in a shell plunger cavity 27, and forced against the lip 25 by a shell plunger spring 29. Shell plunger spring 29 is retained in the cavity by conductor plate 30 of conducting material, which is in turn in contact with shell binding post 31.

I have thus provided one end contact for fuse 11 and contact to the sides of the lamp base, leaving the other end contact of the fuse and the central contact 22 of the lamp as yet unconnected. Inasmuch as the modification of my invention shown in Figs. 1 to 8 inclusive is adapted to utilize separate internal contacts to both fuse and lamp, I provide these contacts by the use of a freely floating contact washer 32 which is positioned between the fuse and lamp within the lamp shell 12. This washer is provided with shoulders 34 riding in slots 35 in the opposite walls of shell 12. Thus the washer cannot rotate.

The construction of this washer is clearly shown in Figs. 6 and 7. On the fuse side of the washer, as shown in Fig. 6, there is a central fuse disc 40 making contact with end 10 of the fuse 11. This fuse disc is fixed to the washer by fuse disc tabs 41, and has a laterally extending portion 42 which is in the path of a fuse plunger 44 in a fuse plunger cavity 45, forced against the washer by fuse plunger spring 46. Fuse plunger spring 46 is held in the cavity by a fuse plunger plate 47 which is in turn contacted by interior fuse binding post 49. Thus the circuit through the fuse may be obtained between central fuse binding post 4 and interior fuse binding post 49, irrespective of small variations in the position of washer 32.

On the opposite face of the washer 32, a view of which is shown in Fig. 7, is a lamp disc 50 which is held in place by lamp disc tabs 51, angularly disposed with relation to the fuse disc tabs on opposite base, so that no electrical connection will be made therewith. Lamp disc 50 is also extended laterally a short distance at a different angle from the laterally extending portion 42 of the fuse disc 40 on the other side of the washer, and this lateral extension of the lamp disc 50 then passes through the washer to the fuse side thereof and terminates adjacent to the periphery in a lamp disc plunger contact 52, as shown in Fig. 4. This lamp disc plunger contact is in the path of a lamp disc plunger 53 in a lamp contact recess 54, and urged against the lamp disc contact 52 by lamp contact spring 55, held in place by lamp contact plate 56 connecting to an inner lamp contact binding post 59. Thus, I have provided independent electrical contacts to both sides to both lamp and fuse.

The lamp 15, when the pins thereof are in pin recesses 19, is maintained in proper position by the urge of spring 7 forcing the fuse 11 against washer 32, and then washer 32 is forced against the central contact 22 of the lamp. Thus the lamp is maintained in place by the spring 7 connecting through fuse 11 and washer 32. Washer 32 being free to move longitudinally of the shell, will allow for the removal of the lamp by pushing the lamp against the urge of spring 7 until pins 17 are out of their indentations, turning the lamp until the pins are opposite slots 16, then removing the lamp by drawing it forward. Under these conditions the fuse is not removed, washer 32 simply moving forward under the urge of spring 7. If it is desired to change the fuse, then the lamp shell 12 is rotated out of the J-slot 21, either with or without the lamp, the fuse removed, and a new one inserted if desired.

In order to protect lamp 15 and to concentrate the light thereof, I prefer to utilize a lamp cover 60. This cover is preferably held on the assembly by frictional contact with shell 12. The interior of the lamp cover closely fits the shell 12, and the cover is pushed over the shell with a longitudinal motion. However, inasmuch as I may desire to remove fuse 11 without disturbing lamp 15, I prevent lamp cover 60 from rotating with relation to shell 12 by providing shell projections 61 extending outwardly from the shell and entering longitudinal slots 62 in the shell, as shown in Fig. 3. Thus the lamp cover 60 is inserted over the shell solely by a longitudinal movement, and consequently, if lamp cover 60 is rotated shell 12 will rotate with it, thus allowing shell 12 to be removed with cover 60, because cover 60, when rotated, will cause rotation of the shell in the J-slots provided, and the longitudinal movement will bring both shell and cover away from the base as a unit.

I also prefer to form cover 60 in a particular manner, one embodiment of which is shown in Figs. 3, 4 and 5. Here, the cover is made of a moldable plastic having a certain amount of translucency when in thin section. The cylindrical side walls 70 are of sufficient thickness so that relatively little light passes through. The outer periphery 71 of the cover is made thick so that the cover may withstand blows upon it applied laterally, and the outer end of the cover is provided with an interior recess 72 into which the lamp bulb 15 projects. The outer end of the cover has a window 75 of relatively thin section to allow light from the lamp to pass therethrough. Thus in a unitary cover I obtain thick walls for strength and to prevent light from passing therethrough, still thicker walls to withstand accidental contacts, and a relatively thin end window through which light may pass. The above recited desirable characteristics are secured by a single molding operation.

One use of the pilot light assembly is shown in Fig. 9. Here, a source 80 is connected to ground at one end and to the central fuse binding post 4 at the other end. The current then passes through spring 7 into fuse 11 and thence to inner fuse binding post 49. The current then may go to switch 81 alternately energizing two current consuming indicators 82 and 84 which are then grounded. Pilot lamp 15 is connected across the alternating circuits, as described and claimed in the application of Trautner and Metcalf above referred to, between binding posts 31 and 59. Thus when either circuit is illuminated by motion of switch 81, the current will pass through pilot light 15 via the grounded indicator which is not being illuminated. Thus if lamp 15 is a low current consumption lamp, it will light without lighting the unconnected indicator. When either one of indicators 82 or 84 is energized, lamp 15 will be illuminated and fuse 11 will protect all circuits.

While I have described the modification shown in Figs. 1 to 8 inclusive as being ideally adapted for use with a circuit wherein two indicating devices are alternately energized, it will also be apparent to those well skilled in the art that there are many other circuits where my invention may be used where it is desirable to use a fuse in con-

junction with a lamp, and wherein separate connection is desired to both fuse and lamp.

I claim:

Apparatus of the class described, comprising an insulating base having a recess therein, a fuse having conductive ends, in said recess, a spring at the bottom of said recess resiliently engaging one end of said fuse, an exterior connection to said spring, a conductive shell removably fastened to said base surrounding the open end of said recess, said shell having an axial aperture therein, a lamp having a bayonet base removably positioned in said aperture and restrained when inserted from moving outwardly and free to move inwardly, a contact washer of insulating material free to move longitudinally of said shell positioned between the outer end of said fuse and the bottom connection of said lamp whereby said spring through the medium of said fuse and said washer urges the lamp outwardly against said restraint, a conductive connection on one face of said washer contacting the outer end of said fuse, a fuse binding post on said base resiliently connected to said fuse conductive connection on said washer, a lamp conductive connection on the other face of said washer contacting the bottom contact of said lamp, and a lamp binding post on said base resiliently connected to said lamp conductive connection, said spring providing all contact pressures between lamp, washer and fuse.

WAGN TRAUTNER.