(No Model.) 3 Sheets—Sheet 1.

A. MASON.

GATE.

No. 590,069. Patented Sept. 14, 1897.

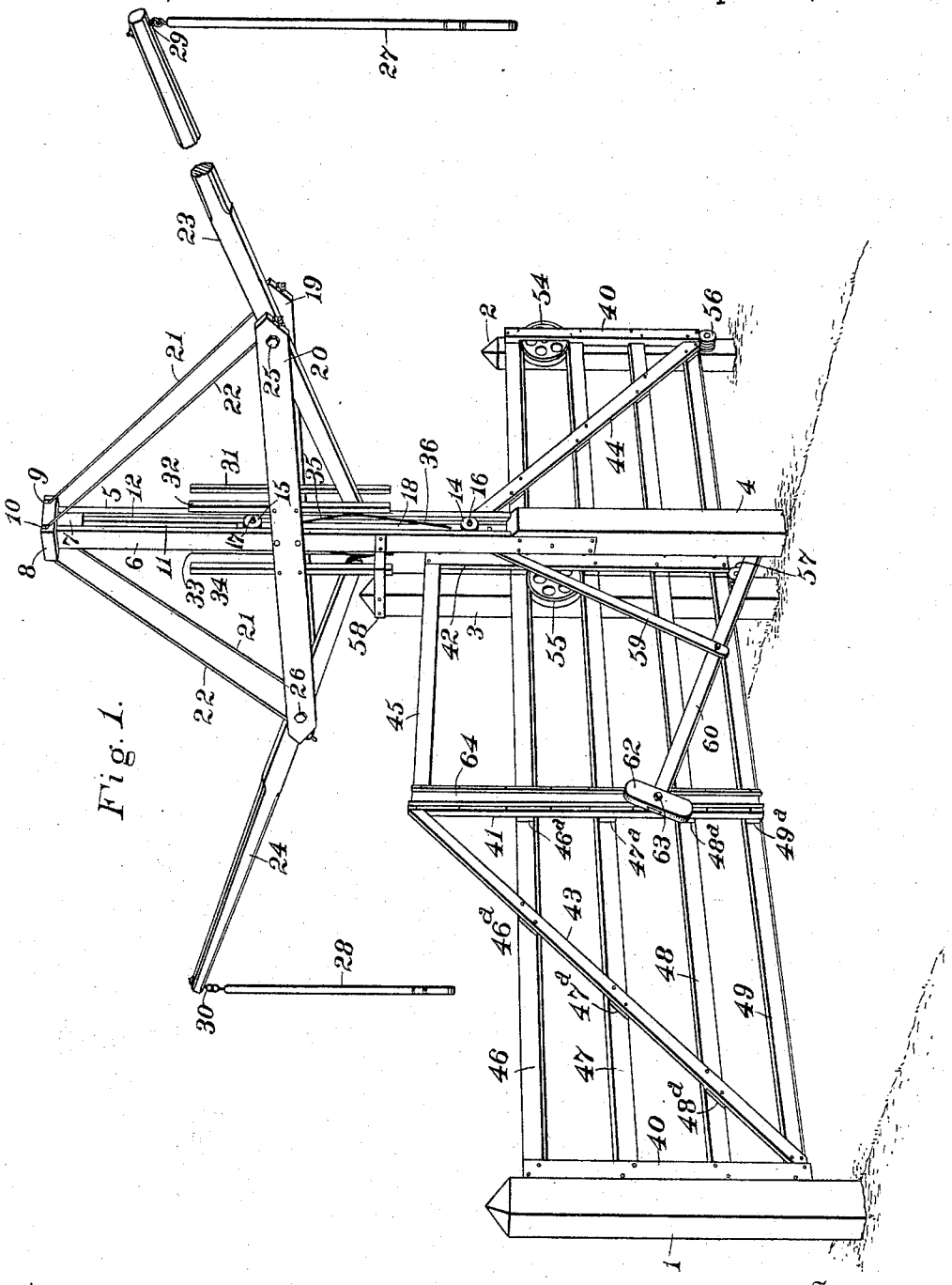

Fig. 1.

Witnesses
James L. Smith
R. Clinton Balinger.

Inventor
Alexander Mason.
By Edwin Guthrie.
Attorney

THE NORRIS PETERS CO., PHOTO-LITHO., WASHINGTON, D. C.

(No Model.) 3 Sheets—Sheet 2.

A. MASON.

GATE.

No. 590,069. Patented Sept. 14, 1897.

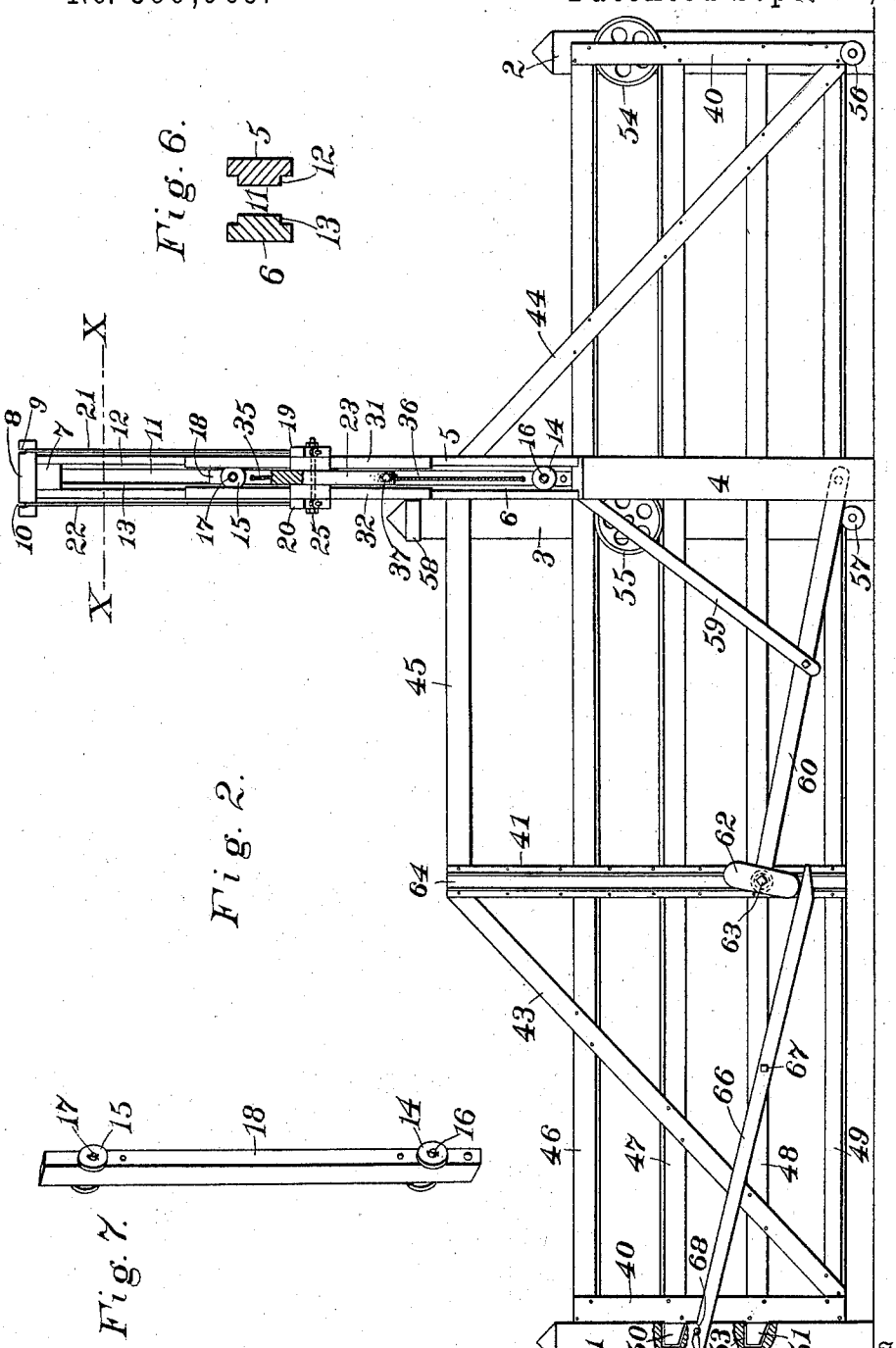

Fig. 6.

Fig. 2.

Fig. 7.

Witnesses
James L. Smith
R. Clinton Balinger.

Inventor
Alexander Mason,
By Edwin Guthrie.
Attorney

THE NORRIS PETERS CO., PHOTO-LITHO., WASHINGTON, D. C.

(No Model.) 3 Sheets—Sheet 3.

A. MASON.

GATE.

No. 590,069. Patented Sept. 14, 1897.

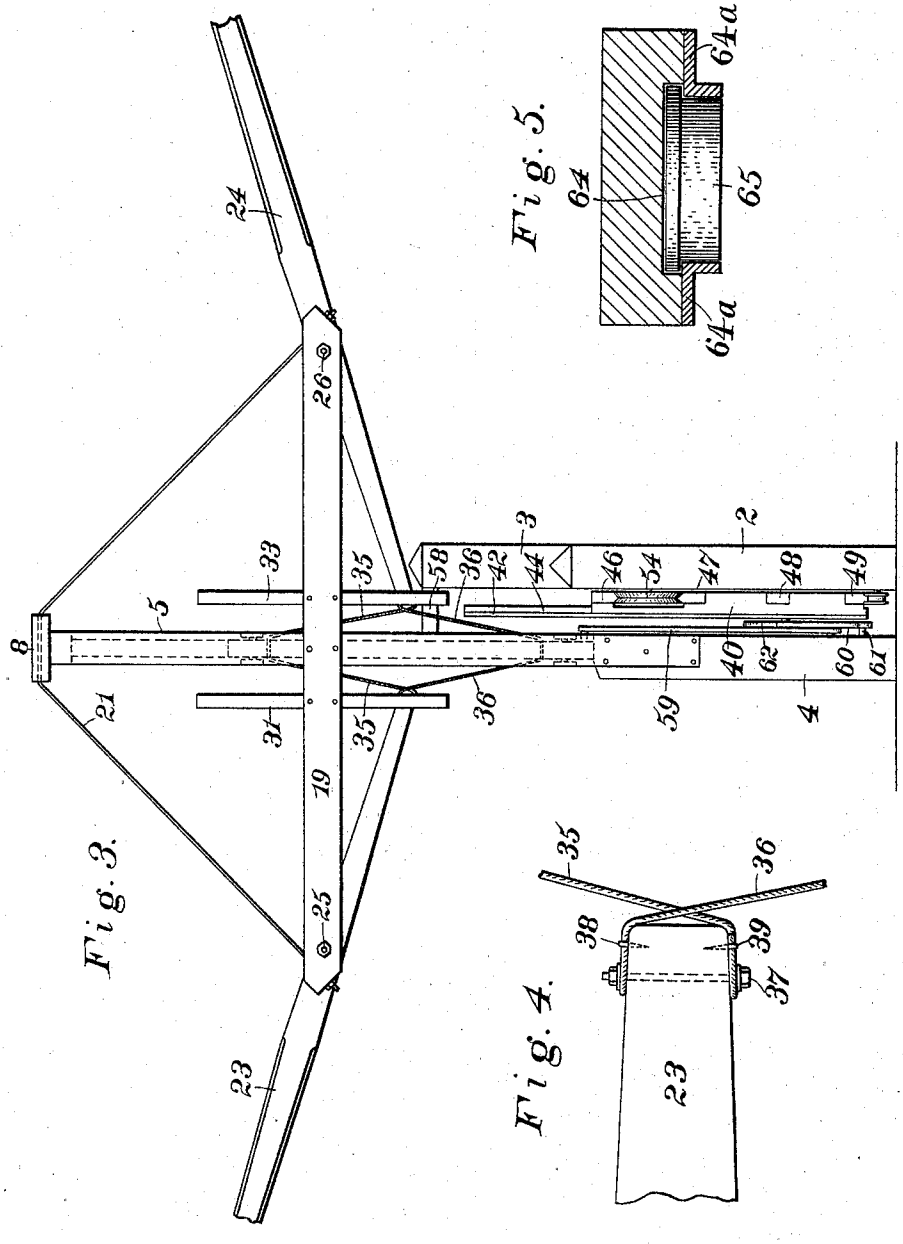

Fig. 3.

Fig. 5.

Fig. 4.

Witnesses
James L. Smith.
R. Clinton Balinger.

Inventor
Alexander Mason,
By Edwin Guthrie.
Attorney

THE NORRIS PETERS CO., PHOTO-LITHO., WASHINGTON, D. C.

UNITED STATES PATENT OFFICE.

ALEXANDER MASON, OF ROCKFORD, ILLINOIS.

GATE.

SPECIFICATION forming part of Letters Patent No. 590,069, dated September 14, 1897.

Application filed November 16, 1896. Serial No. 612,250. (No model.)

To all whom it may concern:

Be it known that I, ALEXANDER MASON, a citizen of the United States, residing at Rockford, in the county of Winnebago and State of Illinois, have invented certain new and useful Improvements in Gates; and I do declare the following to be a full, clear, and exact description of the invention, such as will enable others skilled in the art to which it appertains to make and use the same, reference being had to the accompanying drawings, and to the figures of reference marked thereon, which form a part of this specification.

My invention relates to gates, more particularly to that class of devices including gates which are constructed to be moved lengthwise, horizontally, upon rotating or rolling supports, or capable of being opened and closed by a sliding movement upon and between suitable surfaces and guides, the operating force being originally applied by means of systems of levers.

My invention has for its object the production of a gate especially valuable to farmers, stock-raisers, and suburban property-holders generally, and that may be readily opened or closed by passers, either mounted or in vehicles, without alighting, the actuating mechanism being equally accessible to passers afoot.

A further object of my invention is the construction of a lever-operated horizontally-sliding gate, the mechanism of which, though reduced to the simplest form and its mode of operation rendered obvious to human intelligence, is yet entirely beyond the instinctive methods of animal nature and affords an effectual barrier in the path of wandering stock.

My invention has for still another object the fabrication of a mechanically-governed and horizontally-traveling gate of the special character indicated above, the coöperating elements of which include efficient means for insuring the complete opening or closing movement over the entire distance intended to be covered by the gate portion proper, following each adequate vibration of the main levers. For this movement-completing feature of my invention the necessity arises in order that the stock-turning object above recited may be attained.

I accomplish the objects above set out by employing any selected form of braced and strengthened gate portion or frame provided with a substantially vertical guide-groove wherein operates a stud or roller borne by a weighted swinging lever acting above its pivot in a vertical plane, the lever and weight, as well as the gate-frame, being set in motion by a suitable system of levers, the full opening and closing movements being materially aided by the fall of the weight upon one side or the other of the perpendicular through its pivot.

Each constituent element of my invention is fully described in detail, and its office, together with the mode of operation of the whole, sufficiently explained hereinafter.

Referring to the accompanying drawings, wherein like numerals designate like parts throughout the several views, Figure 1 is a perspective delineation of my invention. Fig. 2 is a side view showing a weight-locked latching device sometimes employed. Fig. 3 is an end view, the observer being stationed beyond the right-hand end of the second figure. Fig. 4 shows the method adopted for attaching the extremities of the main levers by wire ropes to the vertically-acting slide. Fig. 5 is a cross-section of one upright piece of the gate, showing the form of the retaining-groove and flanged roller in engagement therewith. Fig. 6 represents a horizontal cross-section of the two side pieces of the main post on line X X of Fig. 2, showing the rabbeted edges. Fig. 7 represents a perspective view of the slide.

Considering the three large Figs. 1, 2, and 3, numeral 1 represents the left-hand gate-post; 2, the right-hand gate-post; 3, the intermediate wheel-bearing auxiliary post, and 4 the base-post or lower portion of the main post whereupon the operating mechanism is supported. All four posts above mentioned are vertically planted in the earth, the roadway being supposed to lie across a line joining posts 1 and 4. Continuing post 4 upwardly, and best shown in Fig. 3, are side pieces 5 6, having their lower ends firmly secured to post 4 and their topmost extremities connected by a block 7, which may or may not be formed integral with the head or ornamental cap 8. Cap 8 is provided with trans-

verse grooves 9 10 and will be again referred to herein. As a result of the construction described there remains between side pieces 5 6 a vertical longitudinal opening 11, which is slightly increased in width on each side by rabbets or grooves 12 13 cut in the inner front edges of the side pieces. Opposite and similar rabbets are to be found upon the rear edges of the side pieces. (Not shown in the drawings.) Rollers 14 15, having equal diameters exceeding the width of opening 11, but somewhat less than the total width of the opening and rabbets combined, are rotatively secured upon cross-shafts or lag-bolts 16 17 to a slide 18, located movably in opening 11. Slide 18 may be either wood or metal. Upon the opposite or rear surface of slide 18, it will be understood, are secured a second couple of rollers, which are hidden in the drawings, but are in construction and office in all respects identical with rollers 14 15. The rear rollers engage the rear rabbets already mentioned. While it would be quite practicable to permit slide 18 to be reciprocated vertically within opening 11 without the rollers, the consequent friction and wear of the parts are very largely reduced by their introduction, besides which a particularly desirable plan of retaining the slide within the opening is thus available.

Bolted horizontally upon the outer surface of the side pieces are the twin cross-pieces 19 20, and bent tie or truss rods 21 22, passing over the head 8, in engagement with grooves 9 10, support the outer ends of the twin cross-pieces in the well-known manner. Between the ends of the cross-pieces pass the main levers 23 24, having fulcrum-supports upon the pivot-bolts 25 26, Fig. 3. Each main lever has suspended near its outer end a stiff and durable hand-rod (designated by number 27 or 28) and pivotally connected to its respective lever by a stout shackle 29 or 30. It will be noted, therefore, that by means of rods 27 28 the outer ends of the main levers can be pushed forcibly upward as well as drawn downward. Levers 23 24 perform one complete vibration down and up both when the gate opens and when it closes. A downward pull starts either the opening or closing movement, the upward push being used occasionally to reinforce an insufficient initial impulse.

Firmly secured upon the inner surfaces of cross-pieces 19 20 are guide-bars 31 32 upon the left hand of the vertical side pieces 5 6, and similar guide-bars 33 34 are fixed upon the cross-pieces to the right of the side pieces. The four guide-bars are arranged immediately opposite and parallel with each other and with the side pieces 5 6, and their office is the guidance of the vertical movement of the innermost ends of the main levers, as plainly indicated in large Fig. 3.

Considering Fig. 4, in which the scale of drawing has been slightly increased for the sake of clearness, it will be noted that the end corners of main lever 23 are rounded and that two wire ropes 35 36 cross each other and are fastened by a bolt 37 and pins or staples 38 39, the latter being occasionally omitted. Precisely the same construction connects the remaining ends of ropes 35 36 with the inner end of lever 24. Ropes 35 36 lead through opening 11 and are attached within orifices passing through slide 18 near each end. Joining the main levers and slide by ropes, as described, is a very important feature of my invention, free movement in any direction being thus afforded the levers practically without ensuing friction or wear. I reserve the right, however, to substitute suitable connecting-rods for the ropes, if desired.

It is believed that the above description, taken in connection with the drawings, plainly indicates the extent and character of the means employed to reciprocate the slide within opening 11.

The gate portion of my invention as usually built consists of suitable battens 40 40, intermediate uprights 41 42, inclined braces 43 44, joining the upper ends of uprights 41 42 and lower ends of battens 40. A connecting-piece 45 joins the uprights, and to one side of the pieces just enumerated the rails 46 47 48 49 are secured. Braced as described a very stiff strong gate-frame results. Rail 46 is beveled or rounded upon its lower edge, rail 47 is so formed upon its upper edge, and 49 upon the lower edge may present a similar shape. These rails where beveled may be sheathed in metal to prevent wear. Rails 47 48 possess projecting ends 50 51, (seen beyond batten 40 in Fig. 2,) and those ends have inclined lower edges adapted to engage corresponding apertures 52 53 in post 1. The joint effect of these rail ends and apertures is to slightly raise the gate as it closes, the resulting pressure upon post 1 having been found ample to hold the gate closed against stock. Ordinarily the horizontal rails are set off from the battens and uprights by blocks 46^a 47^a 48^a 49^a in order that the vertical pieces may clear the rollers.

To support the gate portion of my invention and in order that it may be easily opened and closed, grooved wheels are interposed, number 54 marking that rotatively fixed upon post 2 and number 55 indicating that borne by post 3. Wheels 54 55 respectively engage the beveled edges of rails 47 46 when the gate approaches its closed position and the portion to the left grows heavier than that to right of post 3. When the gate is opening, for a time both wheels engage rail 46. Subsequently the portion to right of post 2 preponderates and wheels 54 55 respectively engage rails 46 47. Strips of metal are used to sheath the rail edges. Double flanged rollers 56 57, borne by posts 2 3, respectively, engage the lower edge of rail 49 and prevent the gate-frame from swinging laterally out of its normal vertical plane. I do not, however, limit myself to any special form of

wheels and rollers. Above the gate portion the post 3 is sometimes joined to one of the side pieces 5 6, to increase the rigidity of the latter by, a strap 58.

A connecting-rod 59 has one end pivotally attached to slide 18 (see Figs. 1 and 2) and its remaining end pivoted to a swinging lever 60, working upon a pivot 61, borne by a post 4, and a weight 62 terminates the lever at its free end. Weight 62 is provided with a suitable groove and set-screw 63, whereby it may be adjustably fixed upon lever 60.

Upright 41 of the gate portion possesses a longitudinal retaining-groove 64, angle-strips 64ª being fixed to overhang the groove, (see Fig. 5,) and a flanged roller 65 is constructed to engage and travel within the groove. Roller 65 is rotatively attached in any convenient manner to lever 60, customarily near weight 62, and it is therefore apparent that as end of lever 60 and the weight are raised the roller must necessarily seek a higher point in groove 64. This can only be attained by a movement of the gate toward the right as my invention is ordinarily built.

In some instances I have provided my invention with a latch-bar 66, having a pivot 67 and a notch 68, adapted to engage a pin 69, driven into post 1. (See Fig. 2.) When the gate closes, weight 62 drops upon the inner end of bar 66, lifting notch 68 into engagement with pin 69, which can only be released by lifting the weight.

It is believed that the mode of operation of my invention will have been already understood from inspection of the drawings and reading the above explanation. A pull upon hand-rod 28 gives an impulse to both gate proper and weight 62, the slide 18 being raised. Should the impulse be sufficient to carry weight 62 and lever 60 past the perpendicular through pivot 61, the fall of the weight will complete the opening of the gate. Should the impulse fail to raise the weight and supply the gate with enough energy to carry it over the perpendicular, the weight and slide fall back into their first positions and the gate is closed. I desire to call attention here to the fact that by fashioning slide 18 of metal an additional weight is provided, which in falling adds its energy to that of weight 62 in completing either the opening or closing movement.

I am aware that numerous lever-operated horizontally-sliding gates have been constructed, and I do not claim those features broadly.

What I claim is—

1. In a gate of the character described, the combination of a suitably-braced gate portion having a vertical guide-groove and horizontal rails, posts, grooved wheels rotatively borne by said posts and adapted to engage said rails and to support said gate portion, a main post, a slide, means for retaining said slide movably upon said main post, cross-pieces secured to said main post, main levers having fulcrums supported by said cross-pieces, suitable connections between said main levers and slide, a lever or arm pivoted to said main post, a rod pivotally attached to said slide and arm, a weight adjustably fixed upon said arm, and a roller or stud projecting from said arm and arranged to engage the guide-groove of said gate portion, substantially as described.

2. In a gate of the character described, the combination of a suitably-braced gate portion having a vertical guide-groove and horizontal rails, posts, grooved wheels rotatively borne by said posts and adapted to engage said rails and to support said gate portion, devices attached to said posts and adapted for preventing lateral swinging of said gate portion, a main post provided with a vertical opening, a slide, means for retaining said slide movably within said opening, cross-pieces secured to said main post, main levers having fulcrums supported by said cross-pieces, suitable connections between said main levers and slide, a lever or arm pivoted to said main post, a rod pivotally attached to said slide and arm, a weight, means for adjustably fixing said weight upon said arm, a roller or stud projecting from said arm and arranged to engage the guide-groove of said gate portion, and devices constructed and arranged to latch said gate portion automatically, substantially as described.

3. In a gate of the character described, the combination of a suitably-braced gate portion having a vertical guide-groove and horizontal rails, posts, grooved wheels rotatively borne by said posts and adapted to engage said rails and to support said gate portion, devices attached to said posts and adapted for preventing lateral swinging of said gate portion, a main post provided with a transverse vertical opening, a weighted slide, means for retaining said slide movably within said opening, cross-pieces secured to said main post, main levers having fulcrums supported by said cross-pieces, guides limiting lateral movement of said main levers, hand-rods pivoted to said main levers, suitable connections between said main levers and slide, a lever or arm pivoted to said main post, a rod pivotally attached to said slide and arm, a weight adjustably fixed upon said arm, a roller or stud projecting from said arm and arranged to engage the guide-groove in said gate portion, and devices constructed and arranged to latch said gate portion automatically, substantially as described.

4. In a gate of the character described, the combination of a suitably-braced gate portion having a vertical guide-groove and horizontal rails, posts, grooved wheels rotatively borne by said posts and adapted to engage said rails and to support said gate portion, grooved rollers rotatively attached to said post and arranged to engage the bottom rail of said gate portion, a main post consisting of a base-post,

parallel vertical side pieces and a head or cap, said side pieces having an interval between them and possessing rabbeted edges, a slide, rollers rotatively attached to said slide and adapted to engage the rabbets in said side pieces, cross-pieces secured to said main post, main levers having fulcrums supported by said cross-pieces, suitable connections between main levers and slide, a lever or arm pivoted to said main post, a rod pivotally attached to said slide and arm, a weight adjustably fixed upon said arm, and a roller rotatively secured to said arm and arranged to engage the guide-groove of said gate portion, substantially as described.

5. In a gate of the character described, the combination of a suitably-braced gate portion having a vertical guide-groove and horizontal rails, posts, grooved wheels rotatively borne by said posts and adapted to engage said rails and to support said gate portion, grooved rollers rotatively attached to said post and arranged to engage the bottom rail of said gate portion, a main post consisting of a base-post, parallel vertical side pieces and a head or cap, said side pieces having an interval between them and possessing rabbeted edges, a slide, rollers rotatively attached to said slide and adapted to engage the rabbets in said side pieces, cross-pieces secured to said main post, main levers having fulcrums supported by said cross-pieces, guides limiting lateral movement of said main levers, hand-rods pivoted to said main levers, rope connections between main levers and slide, a lever or arm pivoted to said main post, a rod pivotally attached to said slide and arm, a weight adjustably fixed upon said arm, a roller rotatively secured to said arm and arranged to engage the guide-groove of said gate portion, substantially as described.

6. In a gate of the character described, the combination of a suitably-braced gate portion having a vertical, T-shaped guide-groove and horizontal rails, posts, grooved wheels rotatively borne by said posts and adapted to engage said rails and to support said gate portion, grooved rollers rotatively attached to said post and arranged to engage the bottom rail of said gate portion, a main post consisting of a base-post, parallel vertical side pieces and a grooved head or cap, said side pieces having an interval between them and possessing rabbeted edges, a weighted slide, rollers rotatively attached to said slide and adapted to engage the rabbets in said side pieces, cross-pieces secured to said main post, brace-rods engaging said grooved head and the ends of said cross-pieces, main levers having fulcrums supported by said cross-pieces, guides limiting lateral movement of said main levers, hand-rods pivoted to said main levers, rope connections between main levers and slide, a lever or arm pivoted to said main post, a rod pivotally attached to said slide and arm, a weight adjustably fixed upon said arm, a flanged roller rotatively secured to said arm and arranged to engage the guide-groove of said gate portion, and devices constructed and arranged to latch said gate automatically, substantially as described.

In testimony whereof I affix my signature in presence of two witnesses.

ALEXANDER MASON.

Witnesses:
A. E. FISHER,
H. S. HICKS.