Feb. 24, 1948. J. F. McCASLIN 2,436,396

INERTIA ACTUATED MAGNETIC FUZE FIRING PIN

Filed March 6, 1945

Fig. 1.

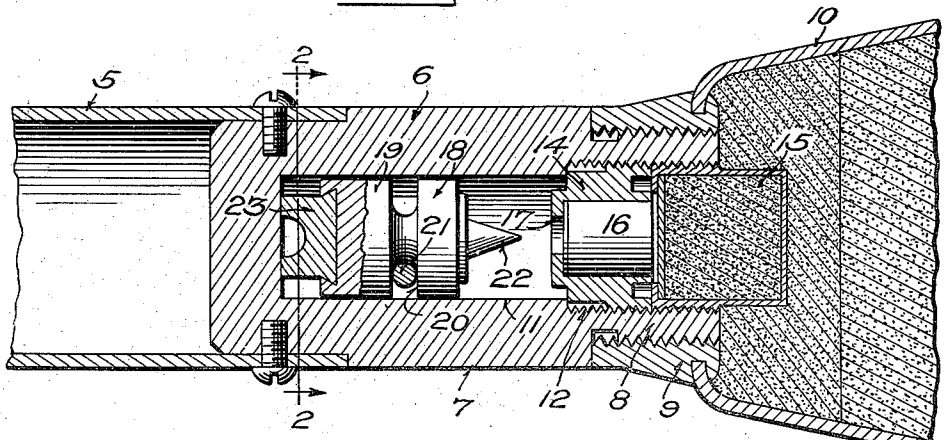

Fig. 2.

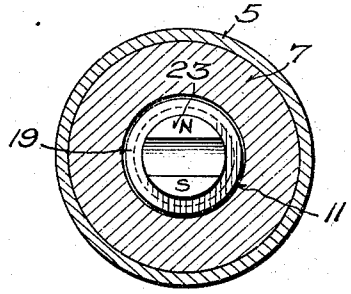

Fig. 3.

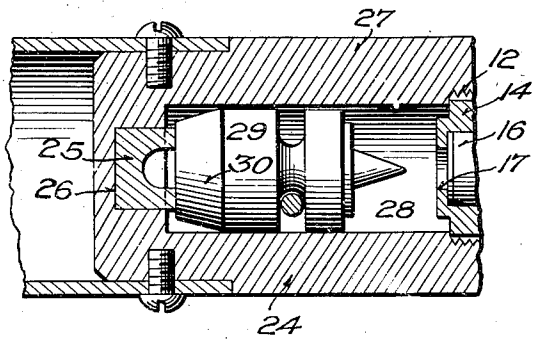

Fig. 4.

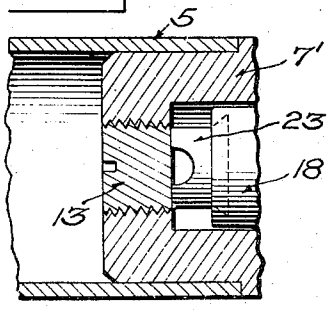

Inventor

JAMES F. McCASLIN,

By C. E. Herrstrom & H. C. Thibodeau

Attorneys

Patented Feb. 24, 1948 2,436,396

UNITED STATES PATENT OFFICE

2,436,396

INERTIA ACTUATED MAGNETIC FUZE FIRING PIN

James F. McCaslin, Cleveland, Ohio

Application March 6, 1945, Serial No. 581,261

1 Claim. (Cl. 102—73)

(Granted under the act of March 3, 1883, as amended April 30, 1928; 370 O. G. 757)

1

The invention described herein may be manufactured and used by or for the Government for governmental purposes, without the payment to me of any royalty thereon.

This invention relates to an improved firing pin for projectile fuzes, and more particularly to fuzes of the inertia actuated type which are normally held in a retracted position by a creep spring or shear pin.

The principal disadvantage of employing a creep spring for holding the firing pin or striker of an inertia actuated projectile fuze in a retracted position, resides in the fact that the resistance to the forward movement of the firing pin under the impulse of inertia, when the projectile strikes a target, is increased as the firing pin approaches the percussion cap or detonator. As a result, a glancing hit frequently results in the fuse failing to function. Also, the force of the spring, required to overcome creep, is so slight that a spring of such resistance is too sensitive so that such springs are made much stronger thus requiring greater inertia force to overcome their resistance. In fuzes of the type employing a shear wire or pin for holding the firing pin until actuated by inertia upon impact of the projectile with a target, it is customary to space the firing pin from the rear end of the fuze housing or barrel in which the firing pin is slidably mounted, so that slight irregularities in the size of the parts will not prevent the application of the shear wire or pin, and consequently, the shear wire or pin is frequently sheared or weakened by setback force upon acceleration of the projectile, to thereby destroy or minimize its utility as a safety factor and to frequently result in premature detonation of the projectile.

The primary object of the present invention is to provide an improved construction of fuze that permits a sudden breakaway of the firing pin from means which retards its forward movement toward a percussion cap, to thereby provide an unretarded movement of the firing pin, after the breakaway occurs, and as the firing pin approaches the percussion cap, so that detonation of the projectile will be insured even on glancing hits.

Another object of the invention is to provide a construction wherein the setback force occurring during acceleration will not affect the functioning of the sudden breakaway retarding means, due to the fact that said means retains the firing pin against the rear end of the housing or barrel in which the pin is movably mounted.

Still a further aim of the invention is to pro-

2

vide means for holding a firing pin in a retracted position which will function to return the firing pin to a fully retracted position should it be moved slightly toward a projected position.

More particularly, it is an aim of the invention to provide a magnetic means for holding the firing pin in a retracted position and which will retard the initial forward movement of the firing pin under inertia impetus, until the travel of the firing pin is sufficient to produce an air gap having a value at which the magnetic field is no longer capable of overcoming the inertia force, to thereby produce a sudden rupturing of the magnetic field and a sudden breakaway or snap action release of the firing pin to allow a final unretarded movement of the firing pin to the percussion cap.

Other objects and advantages of the invention will hereinafter become more fully apparent from the following description of the drawing, which illustrates preferred embodiments thereof, and wherein:

Figure 1 is a fragmentary longitudinal sectional view, partly in elevation, of a portion of a rifle grenade shown equipped with the improved fuze;

Figure 2 is a cross sectional view of the fuze taken substantially along a plane as indicated by line 2—2 of Figure 1;

Figure 3 is a fragmentary longitudinal sectional view, partly in elevation, of a slightly modified form of the fuze; and

Figure 4 is a fragmentary longitudinal sectional view of a slight modification of the fuze of Figure 1.

Referring more particularly to the drawing, wherein like reference characters designate like or corresponding parts throughout the several views, in Figures 1, 2 and 4, 5 designates generally a portion of a rifle grenade shown merely to illustrate one application of the improved fuze, designated generally 6, and comprising the invention.

The fuze 6 includes a substantially cylindrical housing 7 having a reduced neck 8 at its forward end which is externally threaded to engage the internally threaded collar 9, forming the rear end of the grenade head or burster chamber 10. The housing 7 is provided with a longitudinally extending bore 11, the forward end 12 of which is enlarged and internally threaded and opens into the head 10. The rear end of the bore 11 is closed, either by the rear end of housing 7 being solid as shown in Figures 1 and 2, or by means of a plug 13 which may be threaded or otherwise secured in housing 7', as illustrated in Figure 4.

The plug 13 is formed of a magnetic material such as iron or soft steel and the remainder of the housing 7', of Figure 4, is preferably formed of a nonmagnetic material, such as brass, for a purpose which will hereinafter become apparent, whereas housing 7, illustrated in Figures 1 and 2 is formed of a magnetic material. A percussion cap holder 14 is threadedly connected to the threaded bore portion 12 and is disposed in the rear part thereof and directly behind a booster charge 15, which is threadedly connected to the forward end of the bore portion 12 and which protrudes into the head 10. The holder 14 contains a primer charge comprising a percussion cap 16, of conventional construction, which is in contact with the booster 15 at its forward end. Holder 14 is also provided with a centrally disposed opening 17 in its rear end which communicates with the percussion cap 16.

A firing pin 18 is slidably mounted in the bore 11 and includes a piston-shaped body portion 19 having an annular groove 20 therein through which a removable safety pin or wire 21 extends and which is anchored in the housing 7, for providing a positive safety means to hold the firing pin 18 in a retracted position, in the rear end of the bore 11 and away from the percussion cap 16. The firing pin 18 is provided with a tapered pointed projection 22 at its forward end, forming the point of the firing pin and which is disposed to pass through the opening 17, on forward movement of the firing pin 18, to strike and detonate the percussion cap 16. A horseshoe type magnet 23 is secured in the rear end of the body 19 as by means of the dove tail joint, as shown, and projects rearwardly therefrom. The two legs of the magnet 23, which are of opposite polarity, are disposed to normally engage the rear end of housing 7 or the insert 13 and as said portions are attracted by the magnet 23 and are in a fixed position, said magnet 23 functions to retain itself and the firing pin 18 at the rearmost position of the firing pin in the bore 11, as illustrated in Figure 1.

From the foregoing, it will be obvious that after the safety pin 21 has been removed to arm the fuze 6, that upon impact of the rifle grenade 5 with a target the force of inertia will cause the firing pin 18 to be urged forward thereby and against the magnetic pull produced by the magnet 23 on the rear end of housing 7 or the insert 13. As the firing pin 18 is moved forward under this impetus of inertia, the pull created thereby will overcome the force of the magnetic field of the magnet 23, thereby rupturing this field and releasing the firing pin, to permit its unretarded movement from there to the primer 16, to detonate the primer, the booster 15 and the charge of high explosive contained in the head 10. By forming the housing 7' of a nonmagnetic material, as shown in Figure 4, there is no possible tendency of the magnet to exert a pull on any other portion of the housing 7', except the insert 13, so that once the initial magnetic field is ruptured the travel of the firing pin 18 to the primer 16 is positively unretarded.

In Figure 3 a slightly modified form of the fuze, designated generally 24, is shown, which differs from the fuze 6 in that a horseshoe type

magnet 25 is anchored in a socket 26, in the rear end of the fuze housing 27, and has its legs projecting into the bore 28. The firing pin 29 differs from the firing pin 18 only in that the magnet is omitted therefrom and at least its rear portion 30 is formed of a magnetic material, such as iron or soft steel, which is attracted by the magnet 25 for normally holding the firing pin 29 in a retracted position, away from the primer 16 and at the rear end of the bore 28. The functioning of the firing pin 29, after removal of its safety wire or pin, is identical with that of the firing pin 18, in that as the firing pin is moved forward by inertia the magnetic field of magnet 25 will be suddenly ruptured to release the firing pin 29, to permit its unretarded travel thereafter to the percussion cap.

If required to provide additional magnetic force, a magnet could be mounted in the firing pin, as shown in Figure 1, and also in the rear of the fuze housing, as illustrated in Figure 3, so that when the magnets were arranged with their poles to attract, the retarding force on the firing pin would be doubled.

The firing pin 18 may be formed of aluminum or other light alloy, if desired.

Obviously, the invention, which is hereinafter defined by the appended claims, is capable of use with any type of projectile fuze which is inertia actuated, such as rocket projectiles and artillery projectiles, and aerial bombs and has been illustrated and described in conjunction with a rifle grenade, merely for the purpose of illustrating one use of the fuze and should not be construed as a limitation upon the wide variety of uses for which the fuze is adapted.

Likewise, various other modifications and changes in the construction and arrangement of the fuze parts are contemplated and may obviously be resorted to, without departing from the spirit and scope of the invention, as hereinafter defined by the appended claim.

I claim:

A projectile fuze comprising a housing of nonmagnetic material, a primer charge disposed at the forward end of the said housing, the rearward end of said housing having an opening, a plug of magnetic material secured in said opening, a firing pin slidably engaged within the said housing and a permanent magnet secured to the said firing pin and engageable with said plug whereby said firing pin is held by magnetic attraction to said plug at the rearward end of said housing opposite that occupied by the said primer charge and is restrained in its longitudinal movement within the said housing, said firing pin being responsive to deceleration of the fuze upon impact to move forward against the attraction of the magnet to actuate the primer charge.

JAMES F. McCASLIN.

REFERENCES CITED

The following references are of record in the file of this patent:

UNITED STATES PATENTS

Number	Name	Date
384,662	Zalinski	June 19, 1888
1,197,729	Flather	Sept. 12, 1916