Jan. 13, 1953 C. H. CHANDLER 2,625,605

RESONATOR

Filed April 14, 1948

Fig. 1

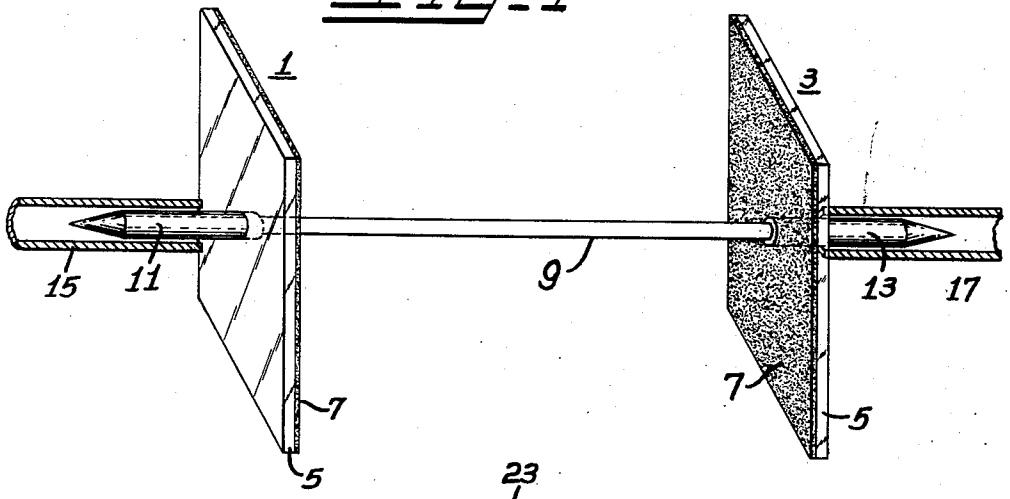

Fig. 2

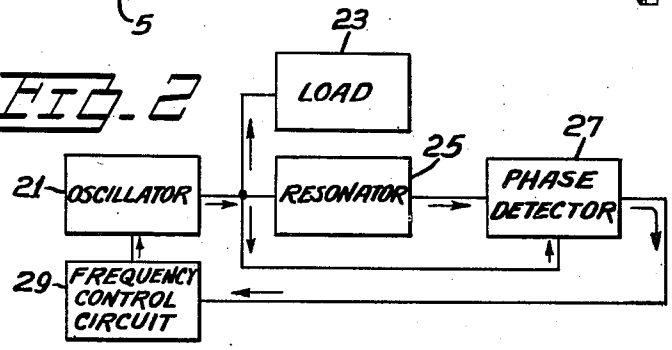

Fig. 3

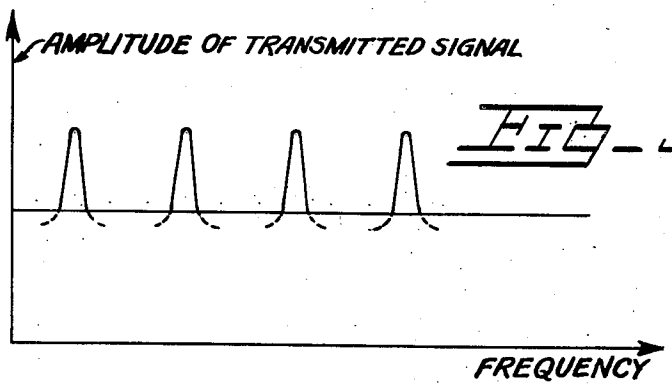

Inventor

Charles H. Chandler

By J. L. Whittaker

Attorney

Patented Jan. 13, 1953

2,625,605

UNITED STATES PATENT OFFICE

2,625,605

RESONATOR

Charles H. Chandler, Princeton, N. J., assignor to Radio Corporation of America, a corporation of Delaware

Application April 14, 1948, Serial No. 21,080

10 Claims. (Cl. 178—44)

1

This invention relates to improvements in resonators for radio frequency energy, more particularly for so-called centimeter waves, i. e. energy of wavelengths of the order of one centimeter.

It is the principal object of this invention to provide resonators for wavelengths in the centimeter range having substantially higher "Q" than those heretofore available.

Another object of the invention is to provide resonators of the described type which operate in only one mode and exhibit resonance only at a number of harmonically related frequencies, even when its dimensions are made large in relation to the wavelength of operation.

More specifically, it is an object of the present invention to provide high frequency resonators wherein so-called "copper loss" is minimized by confining energy within the resonator structure by means of a low-loss dielectric guide rather than by conductive walls as in prior art practice.

The invention will be described with reference to the accompanying drawing, wherein:

Figure 1 is a perspective view of a resonator structure constituting the presently preferred embodiment of the invention,

Figure 2 is a schematic block diagram showing a typical application of the resonator of Figure 1 to the stabilization of a high frequency oscillator, and

Figure 3 is a graph showing the resonance characteristc of the device of Figure 1.

Metallic enclosures or cavities are commonly used as resonators for frequency measurement and control of electromagnetic energy at centimeter wavelengths. Such a cavity may conveniently comprise a suitable length of hollow conductor, or wave guide, closed at each end by a completely reflecting wall. The frequencies of resonance are determined by the dimensions of the waveguide section.

The "Q" of the resonator, and hence its sharpness of resonance at these frequencies, depends upon the losses:

$$Q=\frac{2\pi}{\alpha\lambda}$$

wherein α is the attenuation of the waveguide, considered as a transmission line, in nepers per centimeter, and λ is the wavelength in centimeters at the frequency under consideration. For precision in frequency control or measurement, a high value of Q is necessary.

As a practical matter, the Q obtainable in a cavity resonator is limited by resistance or "copper" losses. The effect of such losses might

2

be reduced to some extent by making the wave guide section very large; however, this will introduce a number of undesirable modes of resonance, and still may not provide a sufficiently high Q.

According to the present invention, a pair of reflectors are disposed facing each other like the end walls of a wave guide resonator, and energy reflected from one to the other is guided between them by a thin dielectric rod instead of enclosing conductive walls.

Referring to Figure 1 of the drawing, reflectors 1 and 3 are disposed in spaced parallel relationship. In the present example each of the reflectors comprises a sheet 5 of plate glass, supporting on one of its surfaces a coating 7 of silver, like a front surface mirror. The reflectors 1 and 3 are provided with substantially central apertures through which extend the respective ends of a rod 9 of polystyrene or other low-loss dielectric material.

The ends 11 and 13 of the rod may be somewhat larger in cross section than the remainder of the rod, and tapered at their extremities as shown. The ends 11 and 13 extend into the ends of hollow conductive wave guides 15 and 17 respectively. The wave guide 15 may lead to a radio frequency source, and the guide 17 may lead to a utilization device or indicator, not shown in Figure 1.

Unlike dielectric wave guides of the type which have been described in the prior art, the rod 9 has cross-sectional dimensions of considerably less than one wavelength at the operating frequency. The rod is excited in a transverse electric mode in which the most of the field is outside the rod itself. This allows propagation of energy along the rod with an attenuation which is substantially less than that of a hollow conductive wave guide. The desired mode in the rod 9 is obtained by operating the guides 15 and 17 in the $TE_{1,0}$ mode.

With the described arrangement, the coupling between the wave guides 15 and 17 and the rod 9 is fairly loose, so that only a small part of the power available at the guide 15 is transferred to the rod 9, and conversely, the resonator is not substantially loaded by the wave guides 15 and 17. Energy propagated along the rod 9 from its end 11 is substantially completely reflected by the reflector 3, and propagated back along the rod 9 to the reflector 1. Here it is reflected again toward the reflector 3, and so on. Substantially none of this energy is radiated, owing to the guiding action of the rod 9.

As the frequency of the energy in the wave guide 15 is varied, it will be found that power is

transmitted through the resonator to the guide 17 only at certain harmonically related frequencies, as shown by the graph of Figure 3. The height and sharpness of the transmission peaks are a measure of the merit of the dielectric guide. Their occurrence is determined by the distance between reflectors; for example, with a spacing of six feet between the reflectors and a wavelength of about 1.25 centimeters, the peaks will appear approximately every 90 megacycles.

A typical resonator for 1.25 centimeter waves, with silver coated reflectors 3 feet square and spaced 6 feet apart, and a polystyrene guide $\frac{3}{32}$ inch in diameter, exhibits a Q of about 53000. With this design, the principal loss in the resonator appears to be caused by imperfect reflection at the reflectors 1 and 3, i. e. "copper" loss. There is evidenced that a higher value of Q can be obtained, at the sacrifice of space, by making the resonator longer, so that fewer reflections occur and the transmission losses in the dielectric rod become more nearly equal to the copper losses in the reflectors. It is to be noted that whatever the length of the resonator, it will operate only in the above described mode, and the resonance peaks will be few as compared to those of a large cavity.

Figure 2 shows a typical application of the device of Figure 1, to the stabilization of a high frequency oscillator. The oscillator 21 may be of any known type, for example a reflex klystron. Its output is supplied to a load device 23, such as an antenna, and is also applied to one end of a resonator 25 of the above-described type. The other end of the resonator 25 is coupled to a phase detector 27 of a suitable type known to those skilled in the art.

The phase detector is also coupled directly to the output of the oscillator 21. The output of the phase detector 27 goes to a frequency control circuit 29, which may be simply an amplifier controlling the voltage applied to an electrode of the oscillator 21. For example, if the oscillator is a reflex klystron, the circuit 29 may control the voltage at the reflecting electrode thereof.

In the operation of the system of Figure 2, the phase detector 27 compares the output of the oscillator with that of the resonator, and produces no output itself as long as the two inputs to it remain in a certain phase relationship. If the oscillator starts to change in frequency, the phase relationship between the two inputs to the detector 27 changes, as a result of the extremely sharp resonance characteristic of the resonator 25.

The phase detector 27 then provides output which operates the frequency control circuit 29 to make the oscillator 21 return to its original frequency. It is evident that the higher the Q of the resonator, and hence the sharper its resonance, the more effectively will the oscillator be maintained at a constant frequency.

Although the invention has been described as embodied in a double ended structure, i. e. a transmission type or four terminal network, it may also be used as a single ended or two terminal device, for example by simply omitting one of the end portions 11 and 13 of the rod 9, and its associated wave guide. In this case the resonator acts and will be used as an impedance device, in a manner analogous to that of a simple resonant circuit or a crystal resonator.

I claim as my invention:

1. A resonator for high frequency radio waves including two parallel plane reflectors spaced apart from each other, the plane reflecting surfaces of said reflectors facing each other and having minimum linear dimensions of the order of the distance between said reflectors and a straight dielectric rod extending between said reflectors and perpendicular thereto arranged to direct said waves back and forth between said surfaces, the maximum cross sectional dimension of said rod being less than one per cent of the distance between said reflectors one said reflector having a central central aperture through which said rod also extends, coupling means for coupling high frequency energy externally of the resonator through said aperture including said rod extension.

2. A resonator for high frequency radio waves including two reflectors spaced apart and with the reflecting surfaces thereof facing each other, and a dielectric rod lying in a line between said reflectors and extending over at least a portion of the distance between said reflectors, said rod thereby being effective to guide said waves back and forth between said surfaces, the maximum cross sectional dimension of said rod being less than one one hundredth of the distance between said reflectors one said reflector having a central aperture through which said rod also extends, coupling means for coupling high frequency energy externally of the resonator through said aperture including said rod extension.

3. A resonator for high frequency radio waves including two reflectors spaced apart and with plane reflecting surfaces facing each other, and a dielectric rod extending between said reflectors to guide said waves back and forth between said surfaces, the maximum cross sectional dimension of said rod being less than one one hundredth of the distance between said reflectors one said reflector having a central aperture through which said rod also extends, coupling means for coupling high frequency energy externally of the resonator through said aperture including said rod extension.

4. A resonator for high frequency radio waves including two reflectors spaced apart and with plane reflecting surfaces facing each other, said reflectors having minimum linear dimensions of the order of the spacing between said reflectors, and a dielectric rod extending between said reflectors, one said reflector having a central aperture through which said rod also extends, coupling means for coupling high frequency energy externally of the resonator through said aperture including said rod extension the maximum cross sectional dimension of said rod being of the order of one five hundredth of the distance between said reflectors said rod being arranged to direct said waves back and forth between said surfaces.

5. A resonator for high frequency radio waves of wavelength λ, including two paraliel reflectors spaced apart by a distance $n\lambda$, where n is a number greater than 10, the plane reflecting surfaces of said reflectors facing each other and each having minimum linear dimensions of the order of $n\lambda$, and a straight dielectric rod extending between said reflectors and perpendicular thereto, said rod being arranged to direct said waves back and forth between said surfaces the maximum cross sectional dimension of said rod being less than λ, means to couple externally high frequency energy from onto said resonator comprising an extension of said rod through one of said reflectors.

6. A resonator for high frequency radio waves, including two reflectors with plane reflecting sur-

faces facing each other and spaced apart by a distance which is a plurality of wavelengths of radiant energy of the frequency at which said resonator is to resonate, one of said reflectors having a central aperture, coupling means for supplying high frequency energy to or absorbing high frequency energy from the space between said reflectors through said aperture, and means for directing said energy back and forth between said reflectors to prevent escape thereof by radiation including a dielectric rod having an extension through said aperture, said extension serving also as part of said coupling means.

7. A resonator for high frequency radio waves, including two plane reflectors with plane reflecting surfaces facing each other and substantially parallel to each other and spaced apart by a distance which is a plurality of wavelengths of radiant energy of the frequency at which said resonator is to resonate, one of said plates having a central aperture, coupling means for coupling high frequency energy from the space between said reflectors to the space outside them through said aperture, and means for guiding said energy back and forth between said reflectors to prevent escape thereof by radiation, said guiding means including a substantially straight rod of dielectric material extending substantially from the center of one of said reflectors to the center of the other of said reflectors, and having a further portion passing through said aperture, said further portion being a part of said coupling means.

8. A resonator for high frequency radio waves including a rod of dielectric material having a maximum cross sectional dimension of less than one wavelength and a length of at least ten wavelengths, coupling means for supplying radio energy to one end of said rod and coupling means for absorbing energy from the other end of said rod, and two reflectors, one at each end of said rod, said reflectors having plane reflecting surfaces facing each other and parallel to each other and perpendicular to said rod, said rod being arranged to direct said waves back and forth between said surfaces, a rod extension entirely through one of said reflectors serving as part of one of said coupling means.

9. A resonator for high frequency radio waves including a rod of dielectric material having a maximum cross sectional dimension of less than one tenth its length, coupling means for supplying radio energy to one end of said rod and coupling means for absorbing energy from the other end of said rod, and two reflectors, one at each end of said rod, said reflectors being plane and parallel to each other and perpendicular to said rod, the minimum linear dimensions of the reflecting surfaces of said reflectors being of the same order as the distance between said reflectors each coupling means including a rod extension at the rod end passing entirely through the said reflector at that end.

10. A resonator for high frequency radio waves including a rod of dielectric material having a maximum cross sectional dimension of less than one tenth its length, coupling means for supplying radio frequency energy to said rod and coupling means for absorbing radio frequency energy from said rod, and two reflectors, one at each end of said rod, said reflectors having reflecting surfaces facing each other and substantially perpendicular to said rod each said coupling means respectively including an end portion of said rod passing entirely through one reflector at the same end.

CHARLES H. CHANDLER.

REFERENCES CITED

The following references are of record in the file of this patent:

UNITED STATES PATENTS

Number	Name	Date
2,142,138	Llewellyn	Jan. 3, 1939
2,253,080	Maslov	Aug. 19, 1941
2,281,550	Barrow	May 5, 1942
2,308,523	Llewellyn	Jan. 19, 1943
2,438,795	Wheeler	Mar. 30, 1948

FOREIGN PATENTS

Number	Country	Date
417,564	Great Britain	Apr. 18, 1934
579,763	Great Britain	Aug. 15, 1946

OTHER REFERENCES

Principles of Radar, McGraw Hill, New York, 1946, page 10.1.