Sept. 11, 1956 J. J. SLOYAN 2,762,663

SUPPORTS

Filed Sept. 27, 1949 3 Sheets-Sheet 1

Fig. 1.

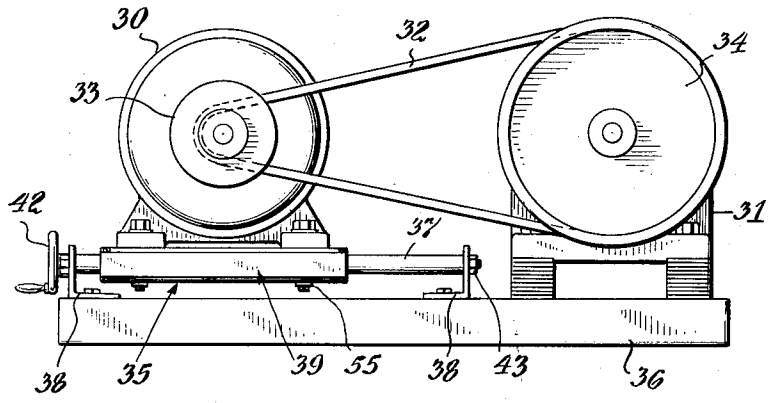

Fig. 2.

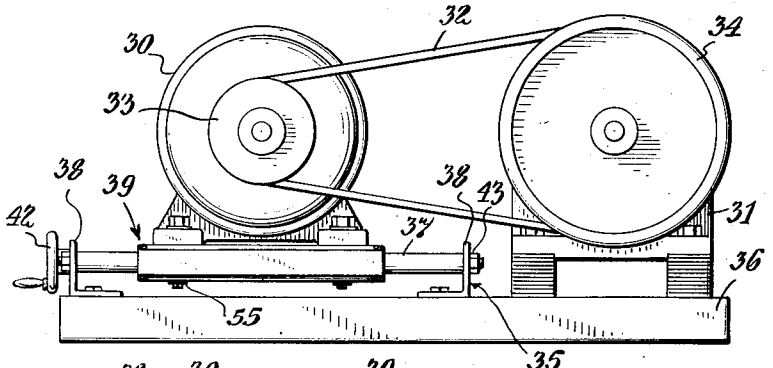

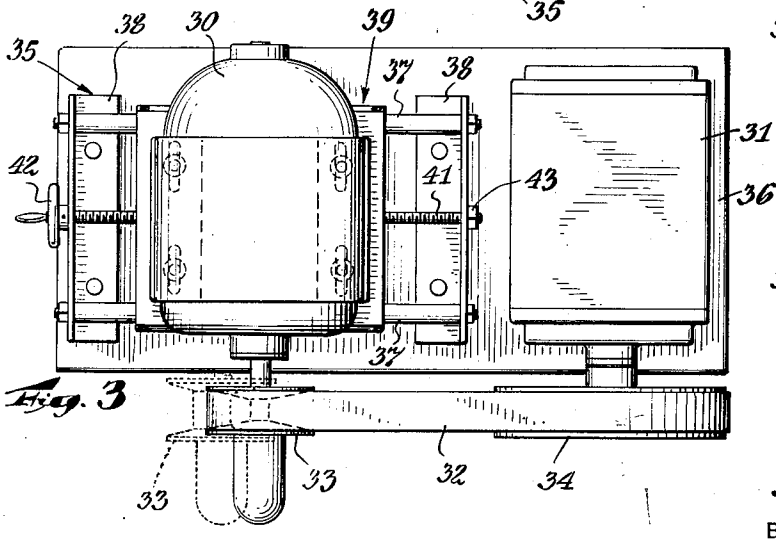

Fig. 3.

Fig. 13.

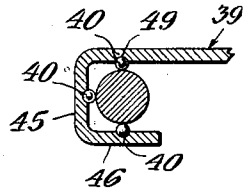

Fig. 14.

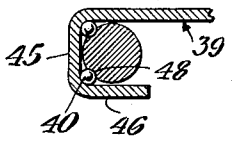

Fig. 15.

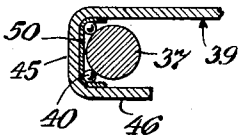

Fig. 16.

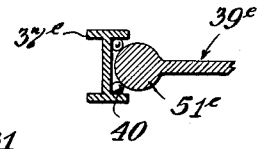

Fig. 17.

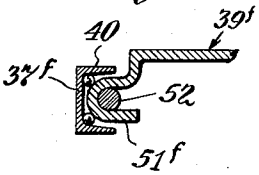

INVENTOR
J. J. SLOYAN.
BY
Howard P. Kuiz
ATTORNEY

Sept. 11, 1956 J. J. SLOYAN 2,762,663

SUPPORTS

Filed Sept. 27, 1949 3 Sheets-Sheet 2

Fig. 4.

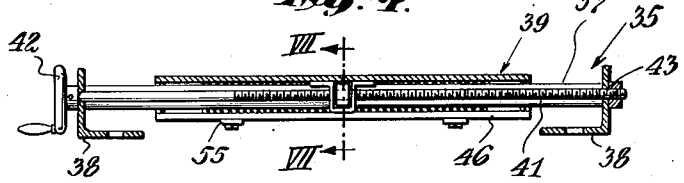

Fig. 5.

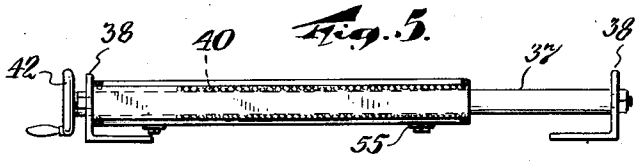

Fig. 6.

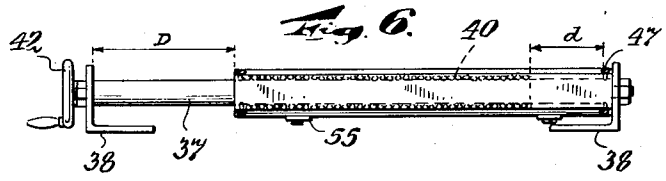

Fig. 7.

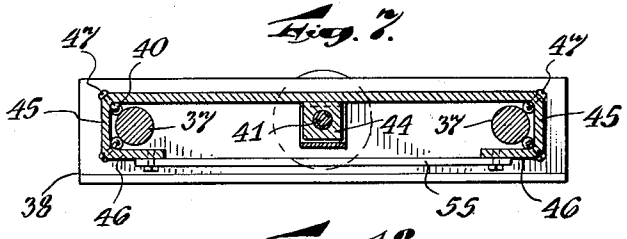

Fig. 18.

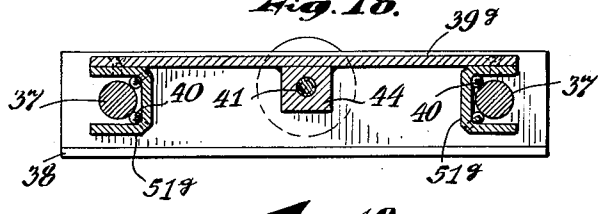

Fig. 19.

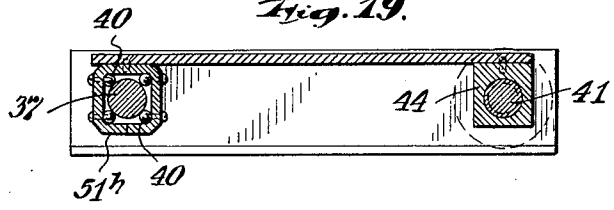

Fig. 20.

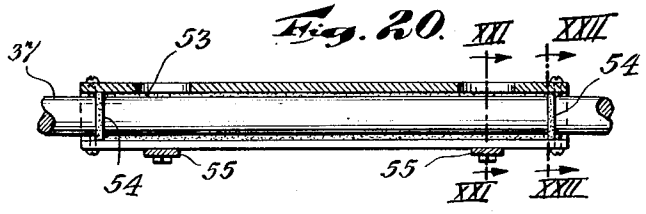

Fig. 8.

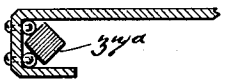

Fig. 9.

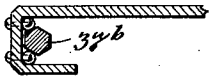

Fig. 10.

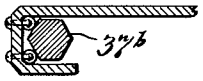

Fig. 11.

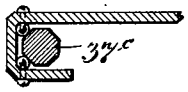

Fig. 12.

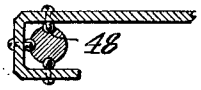

Fig. 21.

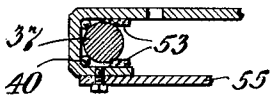

Fig. 22.

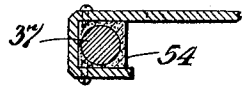

INVENTOR
J. J. SLOYAN.
BY
Howard P. King
ATTORNEY

Sept. 11, 1956 J. J. SLOYAN 2,762,663

SUPPORTS

Filed Sept. 27, 1949 3 Sheets-Sheet 3

Fig. 23.

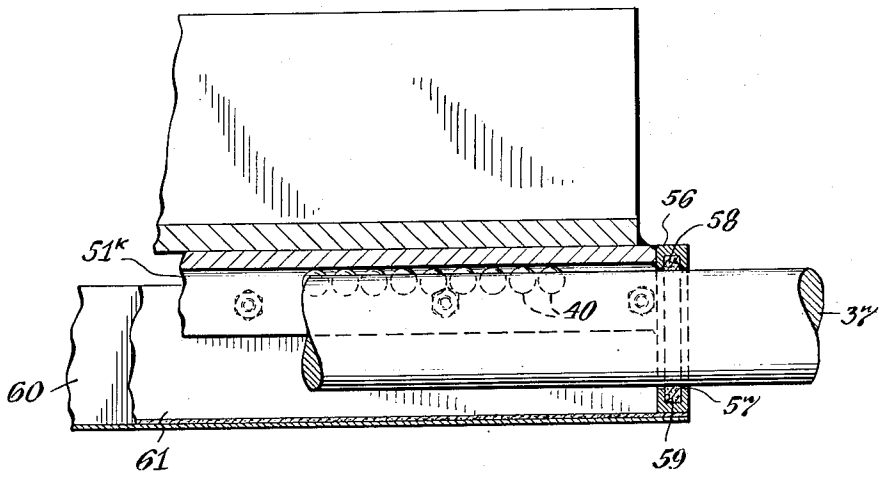

Fig. 24.

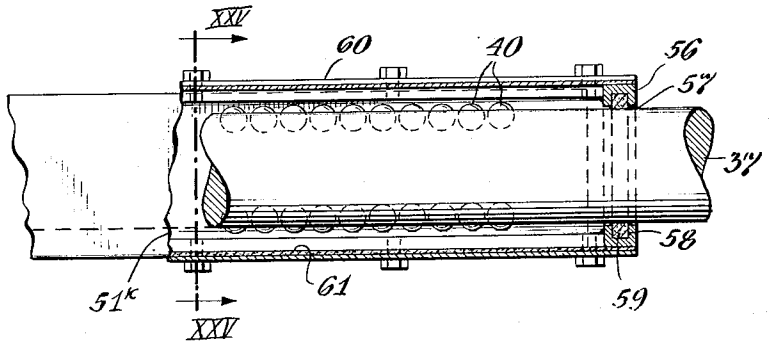

Fig. 25.

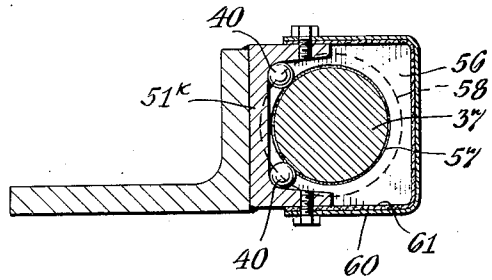

INVENTOR
J. J. SLOYAN.
BY
Howard P. King
ATTORNEY

United States Patent Office 2,762,663 Patented Sept. 11, 1956

2,762,663

SUPPORTS

Jerome J. Sloyan, Bloomfield, N. J.

Application September 27, 1949, Serial No. 117,999

2 Claims. (Cl. 308—6)

This invention relates to slidable supports and more particularly to that type wherein a carriage is provided having limited movement longitudinally of a track or rail.

The invention has utility in association with various instrumentalities of diverse character of which reciprocating tables for milling machines, typewriter carriages, motor supports, gun recoil mounts and other devices will suffice as illustrative, and of which the motor support has been arbitrarily selected for purpose of specific showing in the accompanying drawings. The essential characteristic of the support of the present invention common to the numerous uses, is that the movable portion or carriage has linear movement within maximum limits and must slide with minimum friction throughout the prescribed range of its permitted reciprocation. The invention contemplates structure of a character to accomplish the stated desideratum to best advantage, with minimum bulk, but with the objective of capability of free operation under severe load conditions and ready response to sudden and quick shifts of load or position of the carriage on the rails. Other objects of the invention will become apparent to persons skilled in the art to which it appertains as the description proceeds, both by direct recitation thereof and by implication from the context.

In further reference to the selected embodiment for illustrating one of the many uses for the invention, it may be opportune to recall that motor driven instrumentalities are frequently belt driven and tension of the belt or adjustment of the belt for purpose of speed differential are often provided. For instance, there is on the market and popularly used, a variable speed drive using a V-shaped belt with pulleys correspondingly grooved, but of which one, and usually the driving pulley, is constructed in such manner that its pitch diameter can be varied at will without stopping the motor. That pulley is essentially two cones or frustums of cones axially aligned and spring loaded to keep the groove formed thereby for belt engagement of maximum pitch diameter, but with the cones adapted to be slid one from the other by tension applied to the belt wedging the belt deeper between the cones and thus obtaining belt engagement at a less diametrical distance from the cone axis. The wedging of the belt is accomplished by displacing the motor further from the driven instrumentality. It is consequently essential that the motor may be moved readily since the speed control of the driven instrumentality is a function of motor location and change of location of the driving and driven pulleys with respect to each other. In the numerous installations utilizing the variable drive construction above described, there is a need for rapidity and ease of operation which the present invention supplies.

Referring to the accompanying drawings in which like numerals of reference indicate similar parts throughout the several views:

Figure 1 is a side elevation of my invention on which is carried a motor having belt drive to a driven instrumentality;

Figure 2 is a similar side elevation showing the motor and carriage shifted to a different position;

Figure 3 is a plan of Fig. 2 and showing the pulley position in dotted lines corresponding to the showing of Fig. 1;

Figure 4 is a longitudinal section of the support on a plane paralleling the direction of movement of the carriage and perpendicular to the motor or other mechanism-supporting face;

Figures 5 and 6 are longitudinal sections at one of the rails, showing the carriage in its opposite extreme positions;

Figures 7 to 19 inclusive, are cross sectional views showing various configurations of rails and glider assemblies for carriage support and retention;

Figure 20 is a longitudinal elevation of a rail and section of the carriage showing a detail of lubricant-retaining and dust-excluding means;

Figures 21 and 22 are cross-sections of Fig. 20 on lines XXI—XXI and XXII—XXII, respectively;

Figure 23 is a sectional plan of a portion of rail and glider showing a modified lubricant-retaining construction;

Figure 24 is a sectional elevation of Fig. 23; and

Figure 25 is a cross-section on line XXV—XXV of Fig. 24.

As an arbitrarily selected exemplification of the invention in one use thereof the general organization of Figures 1 to 3, inclusive, illustrates an electric motor **30** driving any desired instrumentality **31** through the agency of a belt **32** and pulleys **33** and **34**, said pulleys being respectively on the shafts of said motor and instrumentality. The pulley **34** on the motor is shown of the known type which expands and contracts in an axial direction for locating the belt at a desired pitch circle of the pulley for speed variation of drive for the pulley of the fixed instrumentality. In general, the motor is representative of a movable or adjustable mechanism.

The present invention resides primarily in the construction of a support **35** for the said mechanism. As shown, a bed **36** is provided to which the fixed instrumentality is secured and to which a fixed portion of the support of the present invention is also secured, it being understood that said bed is representative of any structure such as a floor, table, wall, shelf, ceiling, or the like which will afford relatively fixed mounting for the aforementioned fixed instrumentality and fixed portion of the support.

The fixed portion of the support as herein illustrated comprises two parallel rails **37** the ends of which are made fast to transverse cleats **38** which may conveniently be formed from appropriate lengths of angle iron one flange of which forms a foot resting upon and adapted to be secured to bed **36** and the other flange of which stands perpendicularly and constitutes an end abutment and rigid support for the said rails. The assembly of rails and cleats forms a rectangle of which the cleats will be arbitrarily referred to as at the ends and the rails as at the sides of the rectangular assembly constituting the fixed or basal portion of said support.

The movable portion of the support comprises a carriage **39** having slidable movement longitudinally of the rails, said carriage having gliders at its opposite side margins cooperating with the rails to not only provide for sliding of the carriage on the rails but to also keep the carriage assembled upon said rails. A plurality of cross-sectional configurations of gliders and associated rails are shown, and in each instance provision is made to include anti-friction means between the said gliders and rails, such means being herein illustrated as balls **40**. The wall or surface portions of the gliders and rails upon which the balls roll or which laterally confine the balls will be referred to herein as the ball races.

The carriage has a limited longitudinal movement, the range or amplitude thereof being confined by engagement of the ends of the carriage against the upright flange of cleats **38** as stops.

While the use of antifriction means, such as balls in an annular race, is a matter of common knowledge, it being recognized that the balls in that type of race have a continuous or non-ending path enabling the movement to be cyclic so all of the balls can roll without interruption, and therefore poses no problem. But in the support of the present invention, the paths of the balls is linear, and hence the total amount of displacement is subject to limitation. It is essential, however, that the balls be free to roll, since if prevented from rolling, they merely serve as inert inserts between the rails and glider and as such would provide literally substantially the same amount of friction as if the glider directly engaged the rail.

Since the normal displacement of the balls along the rail will be equal to one half of the displacement of the glider along the rail and in the same direction as the displacement of the glider; and since the displacement of the balls along the glider will be equal to one-half the displacement of the glider, but in a direction opposed to the direction in which the glider is displaced, it is a feature of the present invention to provide a sufficient space lengthwise of the race to enable the balls to roll without interruption for the full displacement of the glider on the rail between its limiting stops.

Representing, as has been done in Fig. 6, the maximum displacement of the glider by letter D, the distance of displacement of the balls by rolling in the race will be substantially $D/2$ which is represented in Fig. 6 as d. In order to accommodate uninterrupted rolling of the balls for the full movement of the glider between stops, and designating the distance between stops by T, balls sufficient to occupy not more than the distance of $T-(D+d)$ are placed in each race. Inclusion of just enough balls to occupy the distance $T-(D+d)$ would provide the maximum permissible number of balls that could be used to roll uninterruptedly and at the same time afford maximum load-carrying capacity for the carriage. A lesser number of balls would of course reduce the load-carrying capacity and would afford support beneath a less length of the carriage. It is furthermore within the province of the present invention to pre-load the balls, that is to say, the race is made tight for the balls so there will be a pressure applied to the balls before addition of the load to be carried by the carriage. This assures contact of all of the balls with the race so that all will roll and none merely slid along.

Operation of the carriage both to change its location between stops and to hold it at the position to which it is moved, may comprise, as shown, a worm **41** parallel to and between the rails and with its ends projecting through the end cleats. One end of the worm is provided with a hand wheel or crank **42** which constitutes an operating means and also a means for preventing longitudinal displacement of the worm rearwardly in a direction away from said crank. The other end of the worm is shown provided with a nut **43** which prevents longitudinal displacement of the worm in the other or forward direction. Said worm is in threaded engagement with like threads in a hole provided for the purpose in a lug or follower **44** secured to and depending from the under side of carriage **39**, and since the worm is prevented from displacement longitudinally, rotation thereof obtains longitudinal shifting of the carriage on its rails.

In Figures 1 to 7, inclusive, the rails are shown circular in cross-section and the gliders are integral margins of the carriage. Said gliders are accordingly the marginal portions of the carriage longitudinal of and overlying the rails and inclusive of depending portions **45** bent downwardly from the body of the carriage to

extend along the sides of the rails and further inclusive of lips **46** bent inwardly under the rails at the bottom of the depending portions. The inside corners or fillets where the bends are made to form the glider, conveniently constitute the ball races of the gliders. The balls in each fillet make contact with the surface of the rail at a line of contact of the rail, and after extended usage may wear a groove in the rail along that line of contact, and should that occur, the rail can be loosened, by virtue of being clamped by nuts at its ends, and given a partial rotation to prevent a new line of contact to the balls.

It may be appropriate to note at this time that means are preferably provided to prevent escape of the balls from the ends of the gliders, a simple means for that purpose comprising screws **47** inserted as found most convenient through the metal of which the glider is constructed so the ends of the screws protrude into the raceway in the path of the end ball of the series.

Although a rail of circular cross-section such as shown in Figures 1–7 has many advantages, of which ease of procurement, simplicity of handling in manufacture and assembly, and partial rotation as above described for overcoming effects of wear, may be mentioned by way of example, the invention is not limited to that sole cross-sectional configuration, but is susceptible to employment of other geometries.

For instance, in the realm of regular polygon cross-sections of rails, Figure 8 illustrates proposed use of a rail **37a** of rectangular or square cross-section; Figures 9 and 10 show rails **37b** of hexagonal cross-section having different angular disposition; Figure 11 shows a rail **37c** of octagonal cross-section; Figure 12 shows a generally circular cross-section of rail with three longitudinal grooves **48** therein to apply thrust to the glider perpendicularly; Figure 13 is similar to showing of Figure 12 except that grooves **49** are provided in the glider rather than in the rail **37**; and Figure 14 shows the balls in the fillets and also in cooperating grooves **48** in the rail **37d**.

In ball-bearing practice, hardness is a vital factor, the softer of the three elements, namely glider, rail and balls, being the one that will show wear. Hard balls are easily procured and present no problem in fabrication of my improved support. Solid section rails of various shapes inclusive of those referred to above, as well as others, are likewise readily obtainable, and of metals and metal alloys which can be readily annealed for fabrication operations thereon and which can be quite as easily hardened for use in the support. However, the sheet material or plate constituting the body of and gliders for the carriage presents a problem of somewhat more difficult solution. In order to avoid cracks and checks in bending the material, it should be as soft as possible, this being particularly true in the larger sizes of the invention utilizing thick material. Alloys which can be hardened by heat treatment do not respond adequately to annealing to the degree of softness required for good bending of the metal when thick as necessary for some sizes of supports. To circumvent this condition, a liner **50** is shown in Figure 15, said liner being of harder and thinner material than the metal of which the carriage body is formed and of a hardness commensurate with that of the balls and rail.

Figures 16 and 17 illustrate the inventive concept as inclusive of rails which overlie the glider rather than, as shown in preceding figures, having the glider overlying or partly surrounding the rails. Thus, in Fig. 16 the rail **37e** is illustrated as an I-beam and the glider **51e** is a rounded bead along the side edge or margin of the body **39e** of the carriage. The balls **40** are located in the fillets at the inner side of the web of the rail next the top and bottom flanges and in contact with the said bead or glider of the carriage.

The showing of Fig. 17 utilizes a channel beam **37f**

for the rail with the flanges of the same directed inwardly toward the carriage 39^f, said carriage having its margin curled to form the glider 51^f and the curled margin being reenforced by a cylindrical bar **52**. The balls **40** are located in the fillets at the junction of flanges and web of the rail and in contact with the curled margin or glider 51^f of the carriage.

As a further possible modification within the purview of the invention, Figure 18 illustrates a carriage body 39^g having channels under the side margins thereof and attached thereto, said channels opening outwardly at the side of the carriage and constituting gliders 51^g. Rails **37** are provided as described previously, said gliders having balls **40** in the fillet corners thereof, and said balls being in contact with the rails.

It is also within the scope of the present invention to provide a glider at one margin only of the carriage and support and operate the carriage at its other margin by the worm. Such a construction is shown in Figure 19 wherein the glider 51^h is of generally square cross-section providing four internal fillets or races for balls **40** so that the single glider will hold the carriage from displacement in all directions except longitudinally of rail **37** which has four lines of contact with the four series of balls. Worm **41** is parallel to said rail **37** at the opposite side of the carriage and both supports and operates the carriage through the agency of threaded lug **44**.

Means may be provided with all showings of the invention for retaining a lubricant, such as grease, in the ball races and to exclude dust. For clarity, this feature is shown separately in Figures 20 to 22 wherein longitudinal pads **53** of felt or other suitable material are applied in edge contact with the rails toward the opposite sides of the rails from the series of balls and for the full length of the raceways, and end pads **54** in the nature of felt washers are applied at the ends of the raceways around the rails. These several pads may be retained in place by adhesive attaching the same to the gliders or by any other suitable means.

A modified showing of lubricant-retainer is illustrated in Figures 23 to 25 inclusive wherein the glider is in the form of a channel 51^k disposed longitudinally of a rail **37** with the flanges of the channel overlapping the rail. Balls **40** are disposed between the rail and glider as in the previously described constructions. At each end of the glider or channel 51^k, as a transverse termination thereof, is a rectangular frame **56** welded or otherwise secured to the end face of said channel. This frame has a circular hole **57** therethrough of adequate diameter to freely pass the rail through the frame. The frame has a sufficient thickness to accommodate provision of an annular groove or mortise **58** opening radially inward toward the rail and in this mortise is a felt or other ring **59** that will slide on the rail and seal the opening therearound. A channel-shaped cover **60** extends lengthwise of the glider from one end frame to the other, lapping said frames as well as the flanges of the glider channel and forming therewith a complete enclosure for a lubricant. To assure a good seal of the said closure with the frames and with the glider channels, a gasket **61**, which for convenience may be formed as a complete liner for the cover, is shown within the cover and applied so its margins are included between said cover and edges of the frames as well as between the cover and the glider channels. The lubricant is accordingly completely housed and kept in contact with the balls in the races between the glider channel and rail.

Finally it may be mentioned that to avoid any possibility of the lips of the gliders from bending or spreading, tie-bars may be provided and arranged to extend cross-wise of the carriage from the lip of one glider to the lip of the other. As illustrative of this feature, such a tie-bar **55** is shown in Figures 1, 2, 4 to 7, 20 and 21, although equally applicable to all exemplifications of the invention except Figure 19.

While selected modifications have been chosen for specific illustration herein, it is to be understood that the showing is not to be considered exclusive of various other contemplated constructions nor exclusive of the combination of features from two or more of the specific constructions shown or contemplated and within the scope of the appended claims.

I claim:

1. A support comprising a longitudinal rail of solid cross-section, a glider mounted to move longitudinally of said rail, said glider having portions thereof respectively overlying, underlying and laterally opposing said rail, said glider being shorter than said rail and said rail protruding from both ends of the glider, a support at each protruding end of said rail, the length of the glider being less than the distance between said supports and the distance of longitudinal movement of the glider being less than the length of the rail and of the glider, a plurality of series of balls between said rail and glider and with the balls of each series alined longitudinally of the rail and glider, said rail and glider providing a single continuous raceway for each alined series of balls at the meeting corners between said portions of the glider, said raceways thereby being parallel to each other and at separated locations about the rail, each said raceway having a length materially greater than the summation of the alined diameters of balls included therein, and said balls of each alined series occupying more than half of the length of the length of the single continuous raceway therefor.

2. A support in accordance with claim 1 wherein the said rail is circular in cross-section and the glider is substantially channel-shape providing a race between a corner thereof and the curved surface of said rail, the rail having support at end portions thereof beyond the ends of the glider.

References Cited in the file of this patent

UNITED STATES PATENTS

468,010	Wood	Feb. 2, 1892
505,400	Grugin	Sept. 19, 1893
681,254	Northway	Aug. 27, 1901
1,275,122	Bordeleau	Aug. 6, 1918
1,846,019	Bangser	Feb. 23, 1932
2,196,892	Berndt	Apr. 9, 1940
2,370,048	Koch	Feb. 20, 1945
2,422,774	Conner	June 24, 1947
2,563,370	Reese	Aug. 7, 1951

FOREIGN PATENTS

37,862	France (Addition to No. 614,922)	Nov. 18, 1930
35,262	France (Addition to No. 627,990)	July 16, 1929