J. TARDIEU.

MACHINE FOR MAKING CORRUGATED PAPER.

APPLICATION FILED JUNE 14, 1912.

Patented Oct. 13, 1914.

1,113,260.

4 SHEETS—SHEET 1.

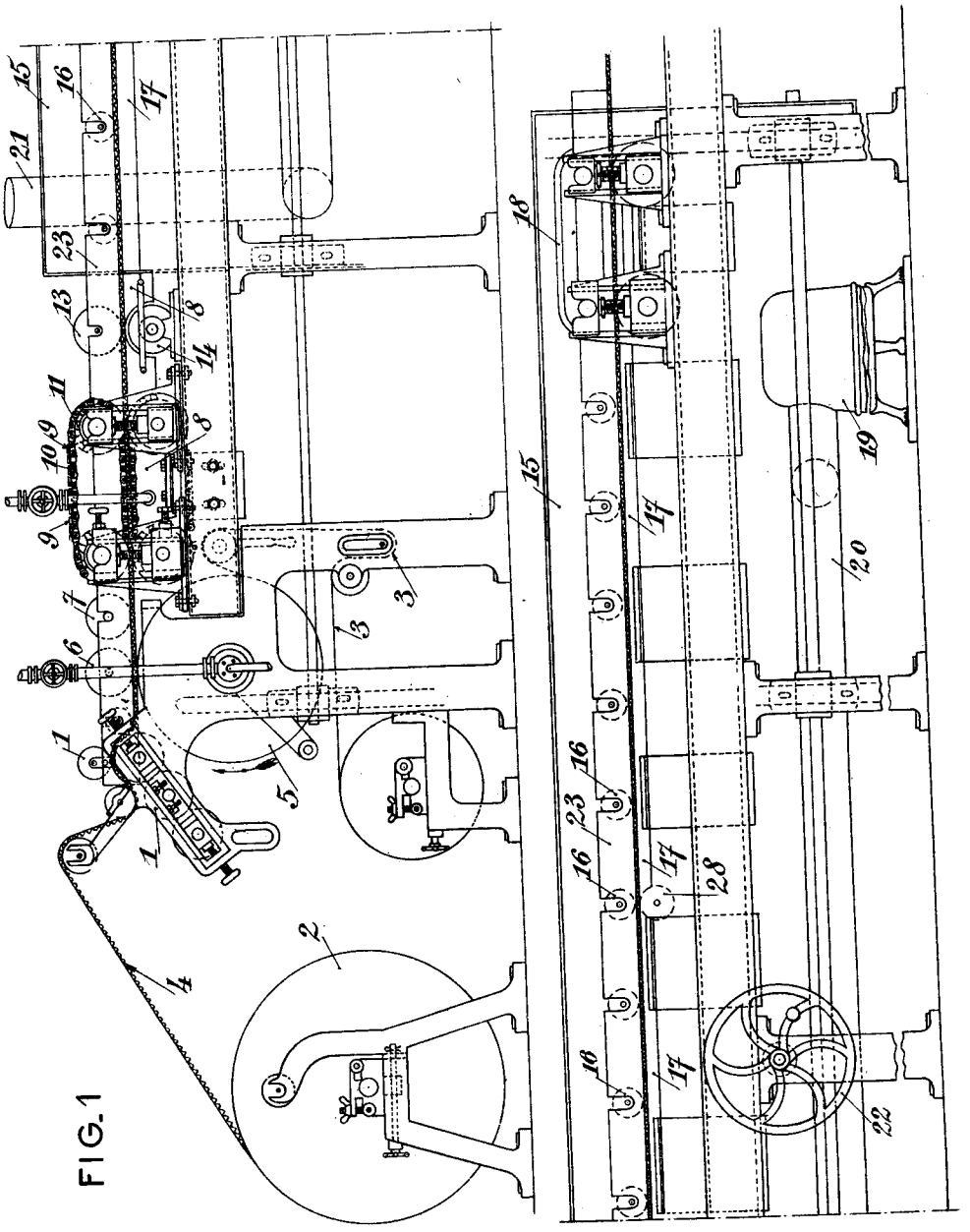

FIG. 1

FIG. 1a

WITNESSES:

John C. Sanders

Albert F. Hoaman

INVENTOR

Jean Tardieu,

BY Wallace Mills

ATT'Y.

THE NORRIS PETERS CO., PHOTO-LITHO., WASHINGTON, D. C.

J. TARDIEU.

MACHINE FOR MAKING CORRUGATED PAPER.

APPLICATION FILED JUNE 14, 1912.

1,113,260.

Patented Oct. 13, 1914.

4 SHEETS—SHEET 2.

FIG. 3

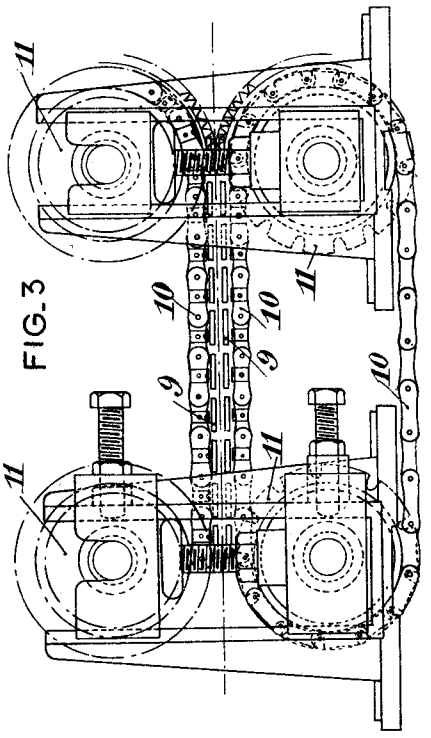

FIG. 4

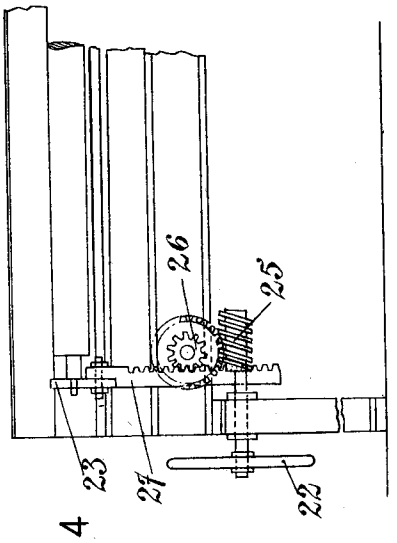

FIG. 2

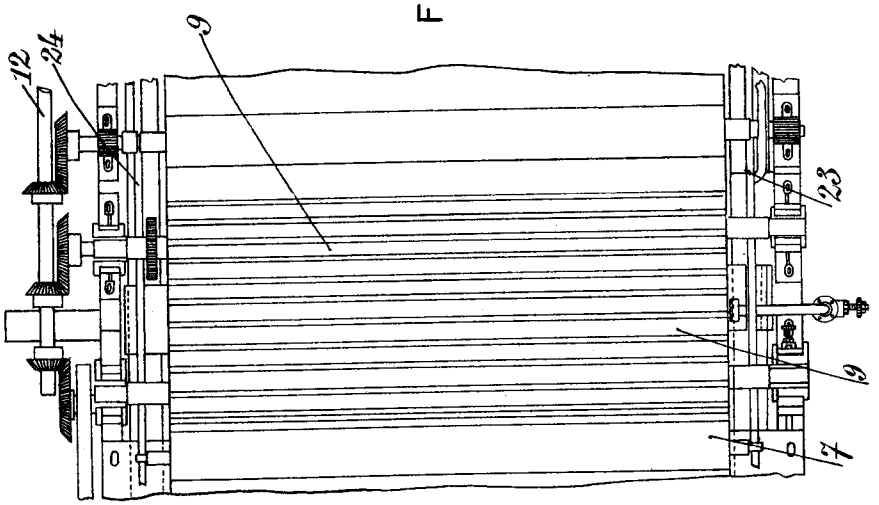

WITNESSES:

John C. Sanders

Albert F. Heuman

INVENTOR

Jean Tardieu

BY Wm. Wallace Mitchell

ATT'Y

THE NORRIS PETERS CO., PHOTO-LITHO., WASHINGTON, D. C.

J. TARDIEU.

MACHINE FOR MAKING CORRUGATED PAPER.

APPLICATION FILED JUNE 14, 1912

1,113,260.

Patented Oct. 13, 1914.

4 SHEETS—SHEET 3.

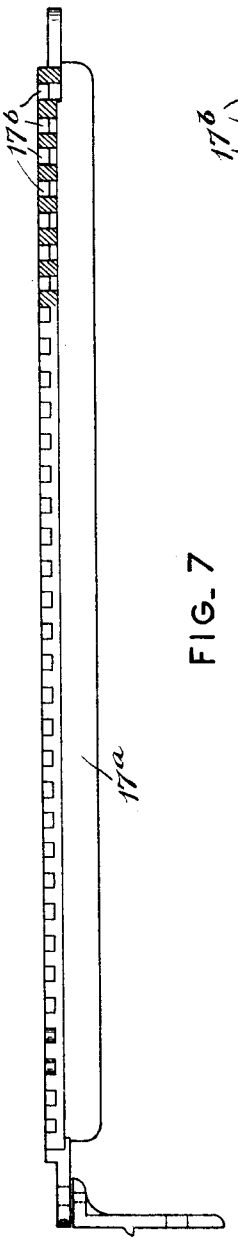

FIG. 5

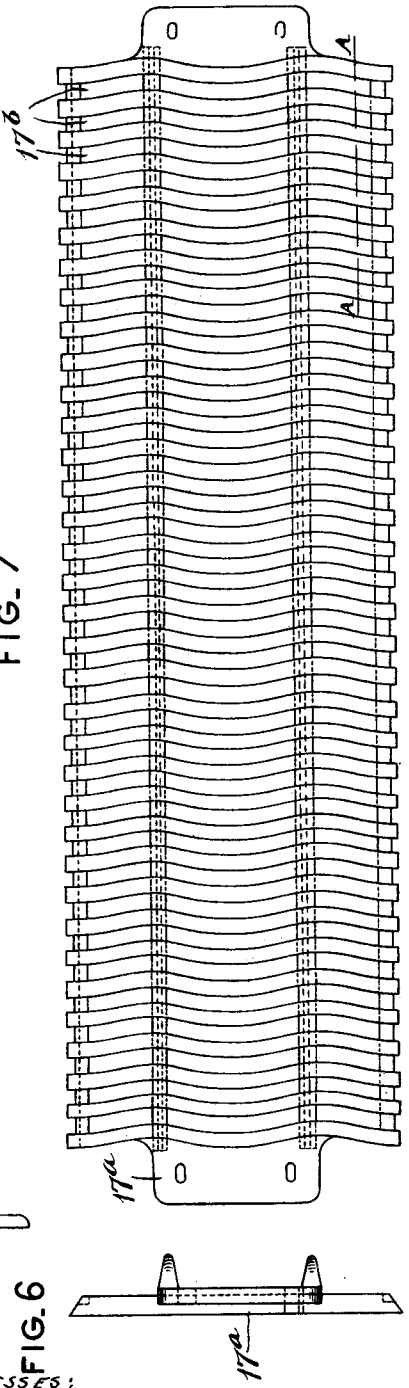

FIG. 7

FIG. 6

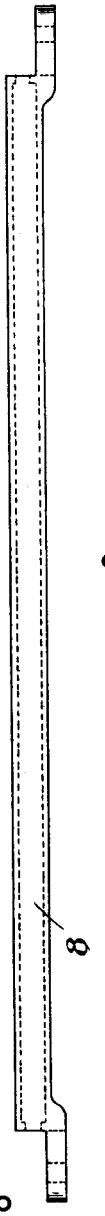

FIG. 8

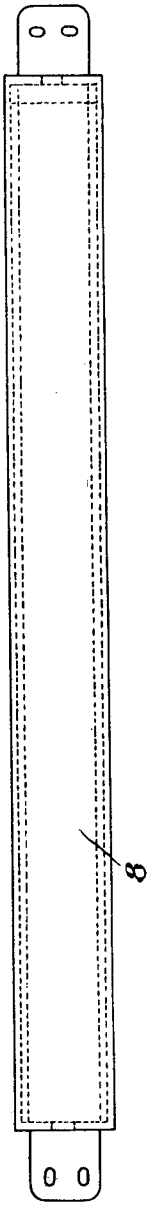

FIG. 9

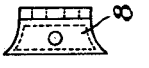

FIG. 9a

WITNESSES:
John C. Sanders
Albert F. Mouman

INVENTOR
Jean Tardieu
BY Millar & Millar
ATTYS.

THE NORRIS PETERS CO., PHOTO-LITHO., WASHINGTON, D. C.

J. TARDIEU.

MACHINE FOR MAKING CORRUGATED PAPER.

APPLICATION FILED JUNE 14, 1912.

1,113,260. Patented Oct. 13, 1914.

4 SHEETS—SHEET 4.

FIG. 11

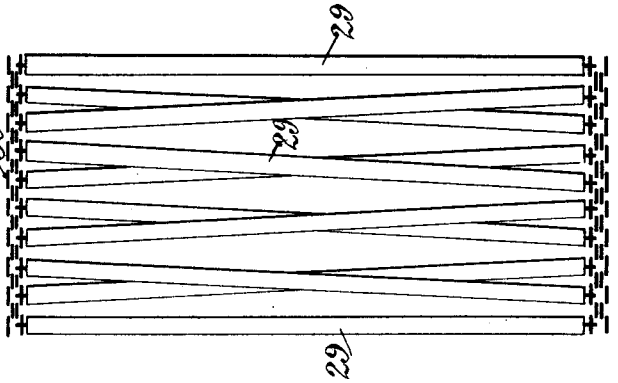

FIG. 10

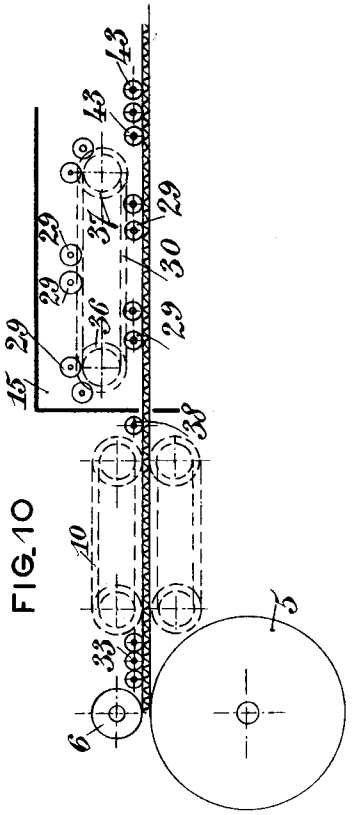

FIG. 13

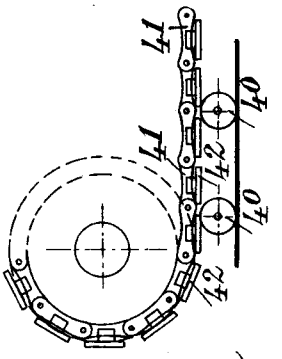

FIG. 12

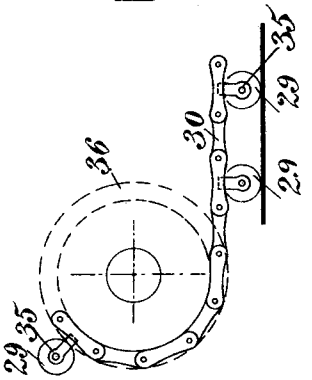

WITNESSES:

John C. Sanders

Albert F. Heuman

INVENTOR

Jean Tardieu

BY Wm. Wallace Mitch

ATTY.

THE NORRIS PETERS CO., PHOTO-LITHO., WASHINGTON, D. C.

UNITED STATES PATENT OFFICE.

JEAN TARDIEU, OF CALUIRE ET CUIRE, FRANCE.

MACHINE FOR MAKING CORRUGATED PAPER.

1,113,260. Specification of Letters Patent. Patented Oct. 13, 1914.

Application filed June 14, 1912. Serial No. 703,686.

To all whom it may concern:

Be it known that I, JEAN TARDIEU, a citizen of the French Republic, residing at Caluire et Cuire, Rhône, in France, have invented certain new and useful Improvements in Machines for Making Corrugated Paper, of which the following is a specification.

This invention relates to improvements in machines for making corrugated paper.

A novel feature of the machine which forms the object of the invention is a special hot air drying device for the corrugated paper comprising slotted tables. This device is provided with conveyers for effecting the passage of the corrugated sheets of paper over said tables.

The invention further consists in the general arrangement of the machine.

The accompanying drawings illustrate the invention.

Figures 1 and 1ª show a machine in side elevation, the casing being shown in section for the sake of clearness. Fig. 2 is a plan view of a part of the machine. Fig. 3 illustrates on a larger scale one of the conveyers in elevation. Fig. 4 illustrates a detail of construction. Figs. 5, 6 and 7 illustrate on a larger scale the arrangement of the slotted tables. Figs 8, 9 and 9ª illustrate preliminary steam drying tables in side elevation, plan and end elevation respectively, these tables being arranged in front of the hot chamber which incloses the slotted tables, they are for the purpose of preparing the paper and bringing it to the desired condition for treatment in the hot chamber. Figs. 10 to 12 illustrate suitable adjuncts to the machine. Fig. 10 is a diagram illustrating in elevation a modification of the parts arranged toward the front of the machine between the cylinder driver 5 and the hot chamber 15. Fig. 11 is a diagrammatic plan view of rollers carried by the chains. Fig. 12 illustrates on a larger scale a portion of a chain 30 provided with rollers 29. Fig. 13 illustrates a variation of construction of the machine.

The gumming device 1 is of a general type and does not *per se* form part of the invention. One of the sheets of paper 4 is supposed to be unwinding from the cylinder 2 but it could come direct from a corrugating machine.

The corrugated sheet could initially be a sheet with single corrugated face, the operation of the present machine being in this case intended to give the sheet a double corrugated face. The flat sheet 3 does not come in contact with the gummed parts of the corrugated sheet until after having passed over the cylinder 5 filled with steam. The assembled sheets are held by the rollers 6 and 7 and pass over hollow tables 8 heated by steam and are conveyed by plates 9 extending over the width of the machine and mounted on links of chains which are operated by toothed wheels 11. The particular arrangement of this conveying mechanism is clearly shown on Fig. 3. The single or double faced corrugated paper thus passes between the plates 9 of the upper chains and the plates 9 of the lower chains.

There are at least two groups of chains to maintain the plates, one at the one end of these plates, the other at the other end, but the number of these parallel chain supports may be increased.

The movement of rotation of the chain wheels is produced by a shaft 12 (Fig. 2) the power being transmitted from said shaft by suitable gearing in such a way that all the plates in contact with the paper travel in the same required direction, and at the same speed.

After having passed between two rollers 13 and 14 and over the hollow steam heated tables, the paper passes into the hot chamber 15 provided with rollers 16, maintaining the paper against the slotted tables 17ª provided with slots 17ᵇ which tables are arranged at 17. Two rollers 16 and 28 of a suitable diameter are placed in the middle of the hot chamber and act to facilitate the progress of the double faced sheet therethrough.

In Fig. 1 the hot chamber is illustrated broken away so as to show the parts which it contains and among others a conveyer 18 (shown diagrammatically) arranged immediately in front of the outlet of the hot chamber and similar to that previously described arranged in front of the entrance of said chamber.

The hot chamber may be heated by various means but a simple stove arranged as at 19 and having suitable conduits 20, 21, will be sufficient to give the necessary heat, efficient drying being obtained by the use of the tables which are slotted as clearly shown in Fig. 7.

Each table is arranged transversely in the hot chamber.

The undulations of the spaces or gaps are arranged so that an excellent drying may be obtained as rapidly as possible and according to the degree of heat an output of from 800 to 1500 kilograms per hour can be obtained.

The details of mounting of the machine can vary but I will describe some suitable constructive details. In Fig. 3 a support for the conveyer is illustrated, a support allowing the suitable regulation of the chains and the distance between the same; this distance should correspond to the thickness of the sheet of paper and it can be easily regulated so that conveyance is absolutely perfect.

In Fig. 4 a device is diagrammatically illustrated which permits by the sole actuation of a hand wheel 22 of simultaneously lifting all the rollers or members carried by the longitudinal bars 23 and 24 (Figs. 1, 2 and 4). This device comprises an endless screw 25 acting on a toothed wheel fixed to another wheel 26, the rotation of which causes a rack 27 carrying the bar 23 to rise or descend. The movement is also transmitted to the bar 24 on the other side of the machine. There are a sufficient number of racks 27 as well as wheels 26 along this machine.

The movement of the parts which must be given rotary movement is effected from the driving shaft 12.

Referring to Figs. 10 to 13 inclusive 5 indicates a cylinder filled with steam over which the flat sheet first passes and is later on stuck under the corrugated sheet. Before passing under the conveyer mechanism 10 the assembled sheets of paper pass under small rollers 33, the axles of which are supported by the frame, not illustrated, of the machine, the axle of the roller 6 being similarly supported. These small rollers contribute to maintain the double faced paper previously gummed. After having passed over the conveyer 10 the paper passes under one or more small rollers 38 carried by the frame, then under rollers 29, the axles of which are carried by supports 35 each mounted on one of the links of chain 30 or by the links themselves. The said chains are conveyed by the movement of rotation of the sprocket wheels 36, 37, mounted on the frame of the machine which carries the sprocket wheels actuating the conveying mechanism 10. The drive of these sprocket wheels is such that the speed of the chains 30 arranged in the hot chamber 15 is greater than the speed of the chains of the conveyer, and consequently greater than the speed of movement of the paper, so that even with the rollers 29 parallel to the axes of the wheels there will be produced a frictional resistance or rubbing of the paper against the hollow table. This frictional resistance or rubbing is still better if it is produced in inclined and crossed directions and consequently not corresponding to the direction of the corrugations of the paper. To realize this condition it is sufficient to mount the rollers 29 on inclined axles as diagrammatically illustrated in Fig. 11. The axle of one of the rollers is then carried at one extremity by a support mounted on one of the links and at the other extremity by a support mounted on a link not opposite the other. It can be seen that two consecutive rollers are inclined in opposite directions. It must be understood that the supports of the axles of these rollers can be conveniently articulated to the links (by means of knee joints for example) so that changes of direction of the rollers can be produced when the chain curves over the sprocket wheels but these details of construction can vary similarly as the diameter and inclination of the rollers can vary. The ends of the axles can even be housed directly in the corresponding links, or other attachment pieces with suitable housings to allow changes of direction.

In Figs. 10 and 12, each roller is represented diagrammatically by a circle, and its inclination is not illustrated. The back conveyer of the machine is driven so as to have a greater speed than that of the front conveyer 10 in such a way that a tension of the paper is produced between these two conveyers. However the speed of the back conveyer is less than that of the chains 30 carrying the pressing rollers 29.

It can be understood that it is advisable to place in the hot chamber above the paper a sufficiently large number of small rollers 43 pressing the paper against the tables.

Fig. 13 illustrates a variation of arrangement of the roller system acting immediately after the conveyer 10. Here the rollers 40 are supported by the frame of the machine. Plates 42 of chains 41 analogous to that of the conveyers bear successively against the rollers which thus press against the paper which slides on the slotted table. These rollers can be mounted on inclined axles so as to produce a rolling action in two directions.

Generally the construction wherein the rollers are mounted on links of chains is preferred but it must be understood that the connecting members of these rollers to the links can vary greatly in shape and in arrangement. Also the number of rollers and the length of chains can be changed as required.

What I claim as my invention and desire to secure by Letters Patent of the United States is:—

1. In a machine for making corrugated paper, the combination with a drying chamber of a slotted table therein, coacting end-

less feed conveyers adjacent the inlet end of the drying chamber between which the paper passes, and similar coacting endless feed conveyers adjacent the outlet end of the chamber, the speed of the last mentioned conveyers being greater than that of the first mentioned.

2. In a machine for making corrugated paper, the combination with a drying chamber, of a slotted table therein over which the paper passes, a coacting pair of superposed endless feed conveyers adjacent the inlet end of the drying chamber, and between which the paper passes, a similar coacting pair of superposed endless feed conveyers adjacent the outlet end of the chamber, the speed of the outlet conveyers being greater than that of the inlet conveyers and a heated table adjacent the lowermost of each pair of conveyers.

3. In a machine for making corrugated paper, the combination with a drying chamber, of a slotted table therein over which the paper passes, a coacting pair of superposed endless feed conveyers adjacent the inlet end of the drying chamber, and between which the paper passes, a similar coacting pair of superposed endless feed conveyers adjacent the outlet end of the chamber, the speed of the outlet conveyers being greater than that of the inlet conveyers, and rollers between the conveyers adapted to hold the paper against the aforesaid table.

4. In a machine for making corrugated paper, the combination with a drying chamber, of a slotted table therein over which the paper passes, a coacting pair of superposed endless feed conveyers adjacent the inlet end of the drying chamber, and between which the paper passes, a similar coacting pair of superposed endless feed conveyers adjacent the outlet end of the chamber, the speed of the outlet conveyers being greater than that of the inlet conveyers, and a pair of coacting feed rollers between the conveyers within the drying chamber.

5. In a machine for making corrugated paper, the combination with a drying chamber, of a slotted table therein over which the paper passes, a coacting pair of superposed endless feed conveyers adjacent the inlet end of the drying chamber, and between which the paper passes, a similar coacting pair of superposed endless feed conveyers adjacent the outlet end of the chamber, the speed of the outlet conveyers being greater than that of the inlet conveyers, rollers between the conveyers adapted to hold the paper against the aforesaid table and means for manually bringing all said rollers into and out of operation simultaneously.

6. In a machine for making corrugated paper, the combination with a drying chamber, of a slotted table therein over which the paper passes, a coacting pair of superposed endless feed conveyers adjacent the inlet end of the drying chamber, and between which the paper passes, a similar coacting pair of superposed endless feed conveyers adjacent the outlet end of the chamber, the speed of the outlet conveyers being greater than that of the inlet conveyers, and auxiliary endless chains within the drying chamber, the speed of which is greater than that of the aforesaid endless conveyers, and pressing means operated by said chains.

7. In a machine for making corrugated paper, the combination with a drying chamber, of a slotted table therein over which the paper passes, a coacting pair of superposed endless feed conveyers adjacent the inlet end of the drying chamber, and between which the paper passes, a similar coacting pair of superposed endless feed conveyers adjacent the outlet end of the chamber, the speed of the outlet conveyers being greater than that of the inlet conveyers, auxiliary endless chains within the drying chamber, the speed of which is greater than that of the aforesaid endless conveyers, pressing means operated by said chains, and transverse pressing rollers coacting with said endless chains, the axes of said rollers being inclined to the longitudinal axis of the table.

In witness whereof I have signed this specification in the presence of two witnesses.

JEAN TARDIEU.

Witnesses:
GASTON YEAMINAUX,
MARIUS MERMAZ.

Copies of this patent may be obtained for five cents each, by addressing the "Commissioner of Patents, Washington, D. C."