Dec. 27, 1960 H. J. HOBBS 2,966,572

ELECTRIC SHAVER

Filed Nov. 17, 1958 2 Sheets-Sheet 1

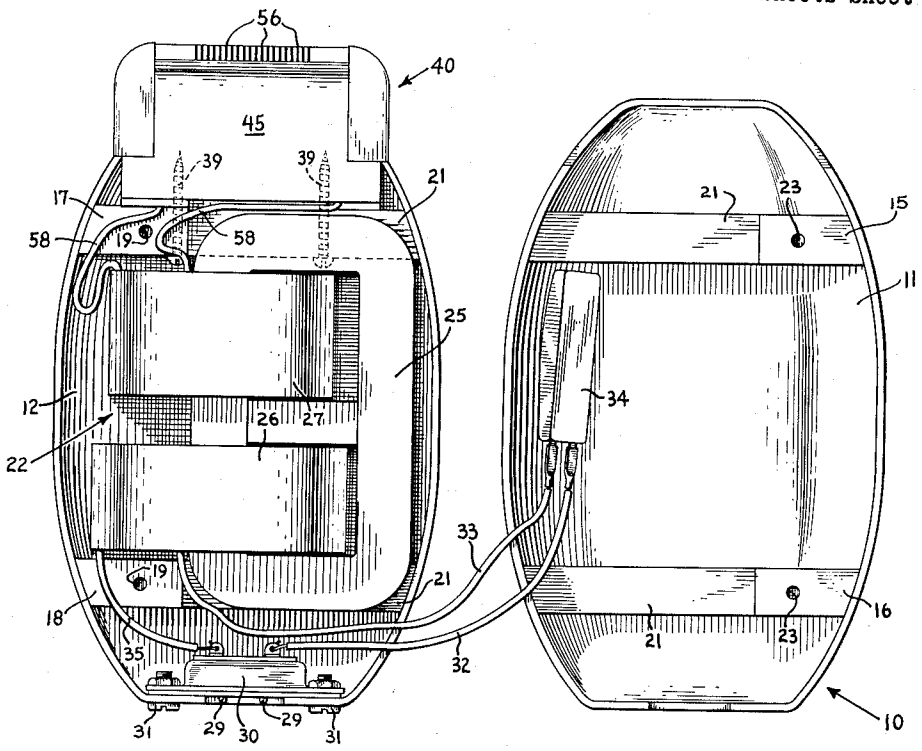

FIG. 1

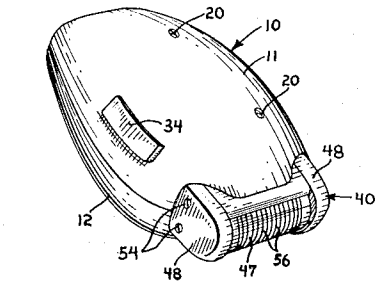

FIG. 2

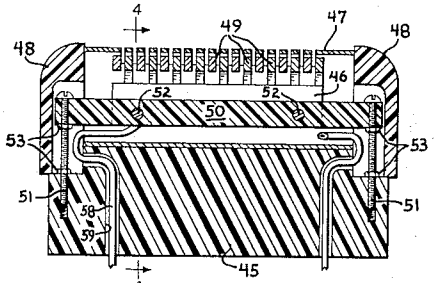

FIG. 3

INVENTOR.
HARRY J. HOBBS
BY
Harold B. Hood
ATTORNEY

Dec. 27, 1960 H. J. HOBBS 2,966,572

ELECTRIC SHAVER

Filed Nov. 17, 1958 2 Sheets-Sheet 2

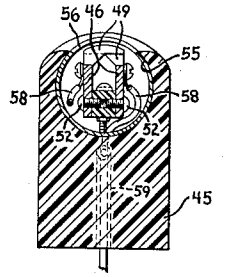

FIG. 4

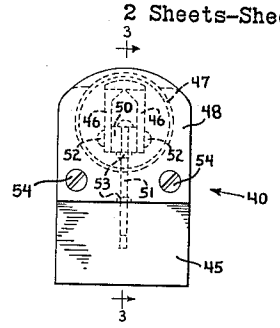

FIG. 5

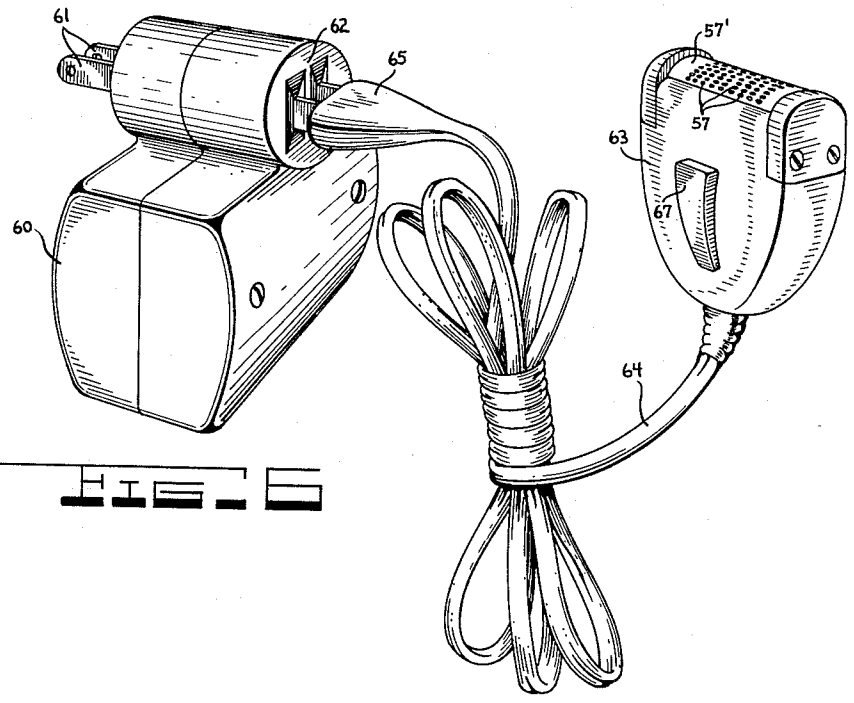

FIG. 6

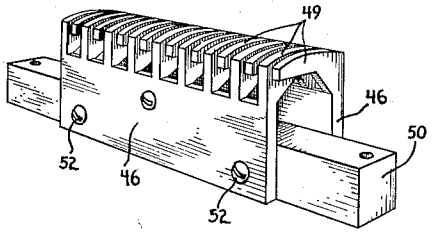

FIG. 7

INVENTOR.
HARRY J. HOBBS
BY
Harold B. Hood
ATTORNEY

United States Patent Office 2,966,572
Patented Dec. 27, 1960

2,966,572

ELECTRIC SHAVER

Harry J. Hobbs, 6220 N. Meridian St., Indianapolis, Ind.

Filed Nov. 17, 1958, Ser. No. 774,388
13 Claims. (Cl. 219—19)

The present invention relates to a method of and apparatus for shaving and finds its primary utility in the removal of hair from the human body.

It is an object of the present invention to provide a novel method of and apparatus for shaving.

It is a further object of the present invention to provide an electric shaver capable of giving a closer shave than conventional electric shavers.

Still another object of the present invention is to provide an electric shaver having no moving parts so as to make construction and maintenance of the shaver simple and inexpensive.

A further object of the present invention is to provide a device for the removal of hair from the human body which device does not cut, scrape, burn or otherwise irritate the skin of the user.

Still another object of the present invention is to provide a relatively lightweight electric shaver.

A further object of the present invention is to provide, in an electric shaver and for the operative portions of the shaver, a guard which does not rub against the skin during shaving thus stopping the irritation which results from such rubbing.

Still further objects of the invention will appear as the description proceeds.

To the accomplishment of the above and related objects, my invention may be embodied in the forms illustrated in the accompanying drawings and in the steps described in the following specification, attention being called to the fact, however, that the drawings are illustrative only and the specific procedure described is by way of illustration only, and that change may be made in the specific constructions illustrated and described and in the specific steps stated, so long as the scope of the appended claims is not violated.

Fig. 1 is a front elevation of an electric shaver constructed in accordance with the present invention and having its casing opened to show the internal components of the shaver;

Fig. 2 is a perspective view of the shaver of Fig. 1 showing the casing in its normally closed condition;

Fig. 3 is a longitudinal section taken along the line 3—3 of Fig. 5 in the direction of the arrows and showing a shaving head forming a part of the shaver of Fig. 1;

Fig. 4 is a transverse section taken along the line 4—4 of Fig. 3;

Fig. 5 is an end elevation of the shaving head of Fig. 3;

Fig. 6 is a perspective view of an alternative embodiment of the invention; and

Fig. 7 is a perspective view of an electrode assembly forming a portion of the shaving head of Fig. 3.

Referring now to the drawings, one embodiment of my basic concept is illustrated in Figs. 1–5 and 7 and comprises a casing indicated generally by the numeral 10, which is formed in two parts 11 and 12 each having transverse interior ridges 15, 16, 17 and 18 which provide means (threaded bores 19—19 and bores 23—23) for the reception of screws 20—20 for holding the two parts

of the casing together in the manner illustrated in Fig. 2. Each of the transverse ridges 15–18 is cut back or recessed over a substantial portion of its length as at 21—21 for cooperative engagement with a conventional step-up transformer 22 received in said casing and having a core 25, a primary winding 26 and a secondary winding 27. A conventional jack 30, having prongs 29—29 for attachment to an electric cord, is fixedly mounted within the end of the casing 10 by means of a pair of bolts 31—31 and has one of its poles electrically connected to one side of the primary 26 of the transformer by means of wires 32 and 33 through a switch 34. The other pole of the jack 30 is connected directly to the other side of the primary of the transformer by means of a wire 35.

A shaving head 40 extends outwardly from the casing 10 and is mounted fixedly in such a position by means of screws 39—39 which penetrate the ridge 17 and thread into the base 45. The shaving head 40 comprises a base 45, a pair of electrodes 46—46 carried fixedly by the base 45, a guard or shield 47 surrounding the electrodes 46 and end guards 48—48.

The electrodes 46 are each formed with a plurality of aligned, spaced fingers 49—49 projecting therefrom and interdigitated with the fingers of the other of said electrodes. The fingers are so formed and arranged that there are provided, between adjacent fingers, spaces which extend perpendicularly to the direction of alignment of the fingers. Preferably the spacing between the adjacent fingers is approximately .003–.005 inch although such spacing is not critical; the fingers, however, should be spaced a sufficient distance apart to allow hair to enter the spaces between the fingers. The electrodes 46 are carried by and fixedly spaced from the base 45 by means of a dielectric member 50 to which the electrodes are secured by screws 52—52, the dielectric member 50 being fixed in a spaced relationship to the base 45 by a pair of screws 51—51 and by spacing nuts 53—53 received on said screws.

The end guards 48, which are fixed to the base 45 by screws 54, and the guard 47 function to prevent the fingers or other portions of the body of a person shaving with the device from contacting or being inserted between the electrodes 46. The guard 47 has a cylindrical shape and is so mounted within a hollowed out, part-cylindrical portion 55 in the base 45 that slots 56—56 in one side of the guard 47 are just adjacent and registering with the spaces between adjacent fingers 49 of the electrodes 46. The slots 56 extend in the same direction as the spaces between the fingers 49 so that when the guard 47 is contacted with the face and moved thereacross whiskers will find their way through the slots and will enter between the fingers 49. The guard 47 may be formed of dielectric material or of steel and, if formed of dielectric material, might be arranged in contact with the fingers 49 rather than just adjacent as shown in Figs. 3 and 4, so as to give a very close shave. In the embodiment of Figs. 1–5 and 7 the guard 47 is fixed against rotation by being tightly received within the hollowed out portion 55; however, the guard could alternatively be rotatably mounted by providing a somewhat looser fit of the guard 47 within the hollowed out portion. In such an arrangement the slots 56 would preferably be replaced by perforations such as the perforations 57 of Fig. 6 which perforations would preferably be distributed relatively uniformly over the entire cylindrical surface.

The transformer 22 is operated to provide a voltage across the electrodes 46 by electrically connecting its primary winding 26 to a conventional domestic power outlet, the connection being effected by a conventional electric cord (not shown) having a plug at one end proportioned and arranged for insertion in the power outlet

and a plug at the other end proportioned and arranged for connection to the jack 30. The secondary winding 27 is electrically connected to the electrodes 46 by wires 58—58 each of which is threaded through a respective one of a pair of passages 59—59 in the base 45 and, therefore, energization of the primary winding 26 of the step-up transformer 22 produces a stepped up voltage across the electrodes 46.

It is well known that the voltage available from a domestic power outlet, to which the shaver is connected during operation by means of the above-mentioned cord (not shown), is usually approximately 110 volts. Preferably the transformer 22 should be capable of stepping up this voltage to approximately a value within the range of 500–1000 volts although this range is not necessarily the only one in which the device will operate. A shaver which was constructed as above described, with an electrode finger spacing of .003–.005 inch and a voltage across the secondary of 600 volts operated effectively and used about 20 milliamps. At 800 volts (across the secondary) the shaver also operated effectively and the current consumption was 30 milliamps.

The shaver is used in a manner similar to conventional electric shavers, that is, is moved back and forth across the face or other body surface with the guard 47 in contact with the body surface and in such directions that the slots 56 are aligned with the directions of movement so that the hair passes through the slots and between the fingers 49 of the electrodes where the hair is removed from the surface in what is believed to be a burning operation. Even though the hair is presumably burned off by current flowing through it from and to the electrodes 46, there is little or no heating up of the electrodes 46, the guard 47 or the face itself. If the guard 47 is rotatably mounted as above described, the guard rolls as the shaver moves across the face thus eliminating the usual rubbing action of the guard of an electric shaver. In the rotatable guard device the electrodes operate to remove the whiskers as above described, the whiskers reaching the spaces between the fingers through the perforations in the wall of the guard.

In order to shave heavier beards a higher voltage may be used across the electrodes and the spacing between the electrode fingers may be increased. If desired, means can be provided in the device to adjust the amount of spacing between the electrode fingers to make possible achieving the best setting for a light or a heavy beard; and it would be possible to provide suitable linkage to produce an inverse adjustment of the secondary voltage proportionate to such adjustment of electrode spacing.

Referring now to Fig. 6, an alternative embodiment of the invention is shown which is similar to the above described embodiment of Figs. 1–5 and 7 with the exception that the guard 57' of the device is rotatable as was mentioned with regard to the guard 47 and with the further exception that the transformer of the device is mounted in a separate casing 60. The casing 60 is provided with a pair of electrical conducting male members 61—61 which may be inserted in the sockets of a conventional domestic power outlet to support the casing 60 and to provide power to the encased transformer's primary winding to which the members 61 are electrically connected.

A power outlet 62 is carried by the transformer casing 60, is electrically connected to the secondary of the transformer and is formed similarly to a conventional domestic power outlet for the reception of a p'ug 65 of an electric cord 64. Instead of the casing 20 of Figs. 1 and 2, the shaver of Fig. 6 is provided with a lightweight, compact handle 63 having a switch 67 mounted therein. The end of the cord 64 which extends into the handle of the shaver is connected by one of its strands to one of the electrodes of the shaver while the other of its strands is connected to one side of the switch 67. The other of the shaver's electrodes is connected to the other side of the switch 67 by a suitable wire. Thus, when the members 61 are inserted in a power outlet and the plug 65 is inserted in the power outlet 62, a series circuit is provided between the electrodes, the switch 67 and the power source; and the switch 67 may be operated to turn the shaver on or off. The placing of the transformer in the casing 60 makes the portion of the shaver which is held by the hand during the shaving operation lighter and more compact.

I claim as my invention:

1. A method of shaving comprising receiving a hair between a pair of spaced electrodes, and applying a potential across said electrodes of sufficient strength to cause removal of the hair by electrical discharge between said electrodes.

2. A method of shaving hair from the surface of a body comprising moving a pair of spaced electrodes across the surface in such a manner that the hair finds its way between the electrodes, and simultaneously applying a potential across said electrodes to cause removal of the hair by electrical discharge between the electrodes.

3. A method of shaving hair from the surface of a body comprising spacing a pair of electrodes approximately .003 to .005 inch apart, moving the electrodes across the surface in such a manner that the hair finds its way between the electrodes, and, simultaneously with said moving, applying a potential across said electrodes of approximately 500 to 1000 volts to cause removal of the hair by electrical discharge between the electrodes.

4. A method of shaving hair from the surface of a body comprising moving a pair of spaced electrodes across the surface in such a manner that the hair finds its way between the electrodes, applying a potential across said electrodes to cause removal of the hair by electrical discharge between the electrodes, and providing a foraminous shield between the electrodes and the surface for protecting the body.

5. An electric shaver comprising a base, a pair of electrodes carried by said base and spaced apart a sufficient distance to allow hair to enter therebetween, and means for applying a sufficient potential across said electrodes to produce an electrical discharge therebetween to remove such hair located between said electrodes.

6. An electric shaver comprising a base, a pair of electrodes carried by said base, each of said electrodes including a plurality of fingers projecting therefrom, the fingers of each of said electrodes being spaced from but interdigitated with the fingers of the other of said electrodes, the fingers of each of said electrodes being spaced a sufficient distance from the fingers of the other of said electrodes to allow hair to enter between said fingers, and means for applying a sufficient potential across said electrodes to produce an electrical discharge therebetween to move hair located between said fingers.

7. An electric shaver comprising a base, a pair of electrodes carried by said base and having portions spaced apart approximately .003 to .005 inch for allowing hair to enter therebetween, and means for applying a potential across said electrodes in the range of 500 to 1000 volts to produce an electrical discharge therebetween for removing hair located between said electrodes.

8. An electric shaver comprising a base, a pair of electrodes carried by said base and spaced apart a sufficient distance to allow hair to enter therebetween, a guard composed of sheet material carried by said base adjacent to and covering said electrodes, said guard having a plurality of apertures therein for allowing hair inserted therethrough to be received between said electrodes, and means for applying a sufficient potential across said electrodes to produce an electrical discharge therebetween to remove hair located between said electrodes.

9. An electric shaver comprising a base, a pair of electrodes carried by said base and spaced apart a sufficient distance to allow hair to enter therebetween, a cylindrical guard composed of sheet material and rotat-

ably mounted upon said base surrounding said electrodes, said guard having a plurality of perforations for allowing hair inserted therethrough to be received between said electrodes, and means for applying a sufficient potential across said electrodes to produce an electrical discharge therebetween to remove hair located between said electrodes.

10. An electric shaver comprising a base, a pair of electrodes carried fixedly by said base, each of said electrodes including a plurality of spaced, aligned fingers projecting therefrom and interdigitated with the fingers of the other of said electrodes, said fingers being so formed and arranged that there are provided, between adjacent fingers, spaces which extend perpendicularly to the direction of alignment of said fingers, a guard of dielectric sheet material mounted on said base adjacent and covering said fingers and having a plurality of slots therein extending in the same directions as said spaces whereby the shaver may be moved across a body to be shaved in the direction in which said slots extend and with said guard in contact with said body for causing hair to be received within said slots and between said fingers, and means for applying a sufficient potential across said electrodes to produce an electrical discharge therebetween to remove hair located between said fingers.

11. An electric shaver comprising a casing, a base mounted on said casing so as to extend outwardly therefrom, a pair of electrodes fixedly carried by said base, each of said electrodes including a plurality of fingers projecting therefrom, the fingers of each of said electrodes being spaced from but interdigitated with the fingers of the other of said electrodes, the fingers of each of said electrodes being spaced a sufficient distance from the fingers of the other of said electrodes to allow hair to enter between said fingers, a step-up transformer received in said casing, means connecting said electrodes in series with the secondary of said transformer, and means for connecting the primary of said transformer in series with a conventional domestic power outlet, said transformer being capable of providing a sufficient potential across said electrodes to produce an electrical discharge therebetween to remove hair located between said fingers.

12. An electric shaver comprising a handle, a base

mounted upon said handle so as to extend outwardly therefrom, a pair of electrodes fixedly carried by said base, each of said electrodes including a plurality of fingers projecting therefrom, the fingers of each of said electrodes being spaced from but interdigitated with the fingers of the other of said electrodes, the fingers of each of said electrodes being spaced a sufficient distance from the fingers of the other of said electrodes to allow hair to enter between said fingers, means for applying a sufficient potential across said electrodes to produce an electrical discharge therebetween to remove hair located between said fingers, and flexible wiring extending from said handle for connecting said electrodes to said potential applying means.

13. An electric shaver comprising a handle, a base mounted upon said handle so as to extend outwardly therefrom, a pair of electrodes fixedly carried by said base, each of said electrodes including a plurality of fingers projecting therefrom, the fingers of each of said electrodes being spaced from but interdigitated with the fingers of the other of said electrodes, the fingers of each of said electrodes being spaced a sufficient distance from the fingers of the other of said electrodes to allow hair to enter between said fingers, a step-up transformer, a pair of male members fixedly associated with said transformer in such a manner as to be insertable in the female sockets of a conventional domestic power outlet, said male members being electrically connected to the opposite poles of the primary of said transformer, a transformer power outlet fixedly associated with said transformer and electrically connected across the secondary of said transformer, and flexible wiring electrically connected to said electrodes and electrically connectible to said transformer power outlet, said transformer being capable of providing a sufficient potential across said electrodes to produce an electrical discharge therebetween to remove hair located between said fingers.

References Cited in the file of this patent

UNITED STATES PATENTS

2,141,869	Konig	Dec. 27, 1938
2,372,508	Meaker	Mar. 27, 1945