J. G. SCHUIRMANN.

ELECTROTHERMOSTATIC REGULATOR.

APPLICATION FILED MAY 20, 1912.

1,074,215. Patented Sept. 30, 1913.

Fig. 3.

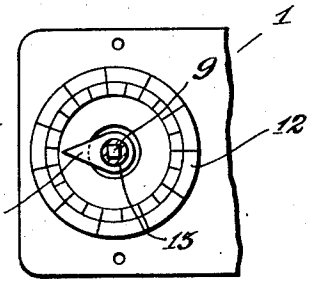

Fig. 2.

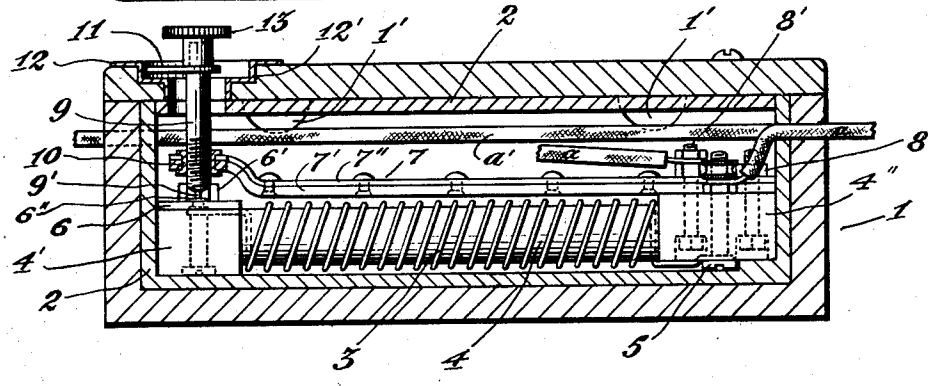

Fig. 1

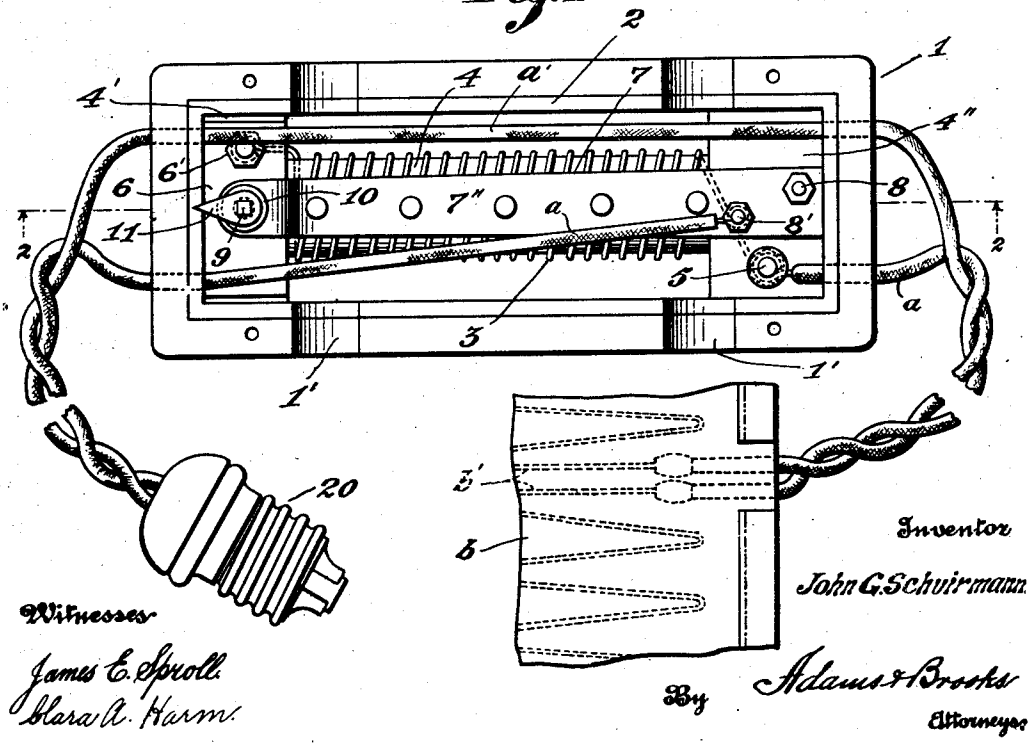

Witnesses

James E. Sproll.

Clara A. Harm.

Inventor

John G. Schuirmann.

By Adams & Brooks

Attorneys

UNITED STATES PATENT OFFICE.

JOHN G. SCHUIRMANN, OF KENT, WASHINGTON, ASSIGNOR OF ONE-HALF TO CHARLES L. SANTEE, OF RENTON, WASHINGTON.

ELECTROTHERMOSTATIC REGULATOR.

1,074,215. Specification of Letters Patent. Patented Sept. 30, 1913.

Application filed May 20, 1912. Serial No. 698,609.

To all whom it may concern:

Be it known that I, JOHN G. SCHUIRMANN, a citizen of the United States of America, and a resident of Kent, in the county of King and State of Washington, have invented certain new and useful Improvements in Electrothermostatic Regulators, of which the following is a specification.

The present invention pertains to an improved electrothermostatic heat regulator or circuit controller primarily devised for automatically controlling the supply of electrical energy to an electric heating pad, and it consists in certain novel features and combinations of parts as set forth in the following description and defined in my annexed claims.

With reference to the accompanying drawing wherein similar reference characters designate corresponding parts throughout the several views: Figure 1 is a plan of my invention in such form as now preferred by me, the same being shown, in connection with an electric extension cord, and with its casing cover removed. Fig. 2 is a side elevation of the same with the casing in section on line 2—2 of Fig. 1, and Fig. 3 is a fragmentary plan showing the pointer and dial to which reference is made in setting the device to operate at a desired temperature.

Reference numerals 1 indicate a casing or heating chamber having an asbestos lining 2 and equipped with a heating element in the form of an electrical resistance wire 3 which is coiled about an asbestos core 4 between head extensions 4′, 4″ thereof and connected at one end with a binding post or bolt 5, seated on the core head 4″, and at the opposite end with a terminal 6, in the form of a plate secured to the core head 4′ by a bolt 6′.

Combined with heating element 3 is a thermostatic bar 7 disposed longitudinally of core 4 and secured by a clamp bolt 8 and a binding post 8′ to the core head 4″ with its free end portion projecting over terminal 6. This bar, which preferably consists of copper and steel layers 7′, 7″, is provided with a terminal in the form of a screw 9 which is engaged in a screw threaded electrical bushing 10 on the bar and provided with a platinum tip or contact 9′ opposed to a platinum contact 6″ provided on terminal 6.

Bar 7, as shown, is arranged with its copper layer facing terminal 6 and the thermostat is therefore adapted to be worked on a closed circuit in series with element 3 and may be set to open as the temperature in casing 1 rises above a predetermined degree by adjusting screw 9 against plate 6 to spring bar 7. For indicating proper adjustment of screw 9 in setting the thermostat to operate at the desired temperature a graduated dial 12 is provided on casing 1 for cöoperation with a pointer 11 secured to the screw. In this connection it will be observed that screw 9 projects through a counterbored aperture of casing 1 and is provided with a squared end portion for the application of a thumb key 13, while dial 12 is secured to a bushing 12′ seated in said aperture.

Casing 1 is provided in its side walls with ventilating openings 1′ and in its end walls with suitable openings for the extension cord wires *a*, *a′* which as shown are connected with a plug 20 and with the heating element *b′*, of an electrical heating pad *b*. The wire *a*, as will be observed, is divided and engaged with the binding posts 5 and 8′ thereby connecting the heat regulator in series with the heating element of pad *b*.

Having thus described my invention what I claim as new, and desire to secure by Letters Patent of the United States of America, is:—

1. A circuit controller comprising a core of insulating material provided with head extensions, a resistance coil wound on said core, a terminal secured to one head extension of said core and connected with one end of said coil, and a thermostatic bar secured at one end to the other head extension of said core, the free end portion of said bar normally being in electrical connection with said terminal and thereby connecting the bar and coil in series.

2. A circuit controller comprising a core of insulating material provided with head extensions, a resistance coil wound on said core, a terminal secured to one head extension of said core and connected with one end of said coil, a thermostatic bar secured at one end to the other head extension of said core, a contact in electrical engagement with said terminal, and a screw threaded in said bar and carrying said contact.

3. A circuit controller comprising a core

of insulating material provided with head extensions, a resistance coil wound on said core, a terminal secured to one head extension of said core and connected with one end of said coil, a thermostatic bar secured at one end to the other head extension of said core, a contact in electrical engagement with said terminal, a screw threaded in said bar and carrying said contact, a pointer on said screw, and a dial associated with said pointer and mounted on a relatively fixed part.

Signed at Seattle, Washington, this 18th day of April 1912.

JOHN G. SCHUIRMANN.

Witnesses:
STEPHEN A. BROOKS,
CLARA A. HARM.