June 23, 1959 P. BRUCKNER ET AL 2,892,062

ARRANGEMENT FOR INTERRUPTING ELECTRIC CURRENTS BY MEANS OF EXPLOSIVE MATERIAL

Filed Jan. 16, 1956 3 Sheets-Sheet 1

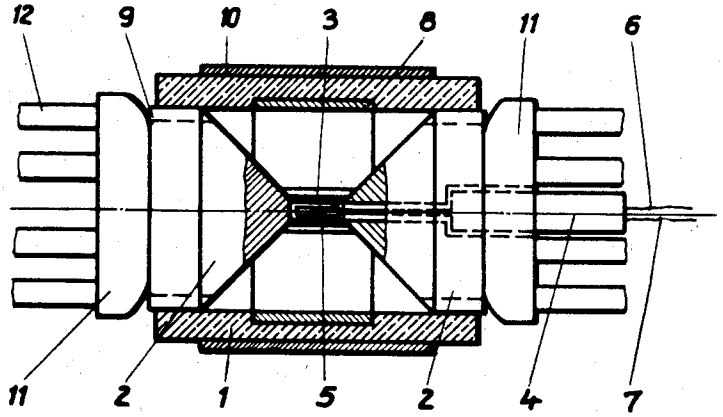

Fig. 1

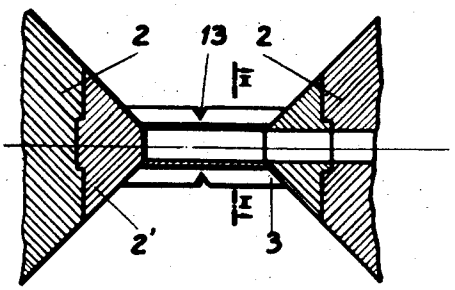

Fig. 2

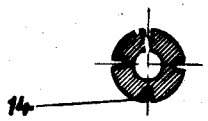

Fig. 3

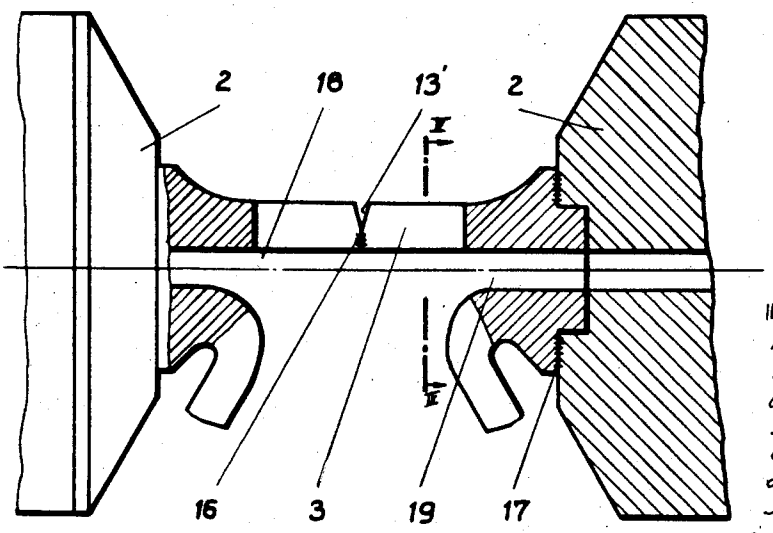

Fig. 4

INVENTORS:
Paul Bruckner
Wolfgang Capeller
Adil Erk
Walter Gottwold
Carl W. Heyser
Ludwig Schmitz
Helmuth Vedder

by Edwin E. Greigg
ATTORNEY

June 23, 1959 P. BRUCKNER ET AL 2,892,062

ARRANGEMENT FOR INTERRUPTING ELECTRIC CURRENTS BY MEANS OF EXPLOSIVE MATERIAL

Filed Jan. 16, 1956

3 Sheets-Sheet 2

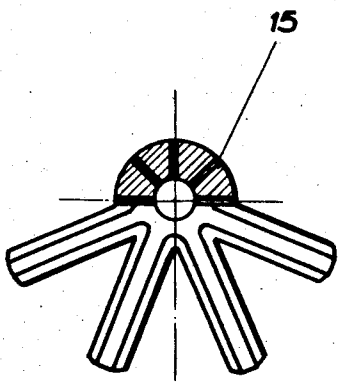

Fig. 5

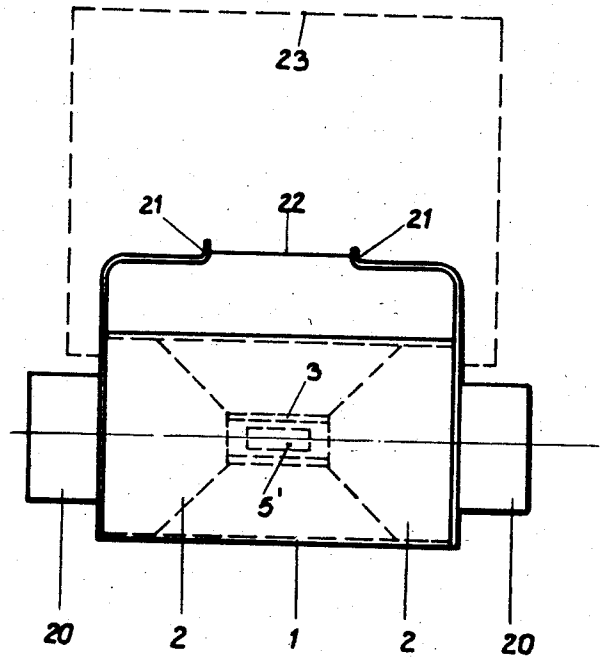

Fig. 6

Fig. 7

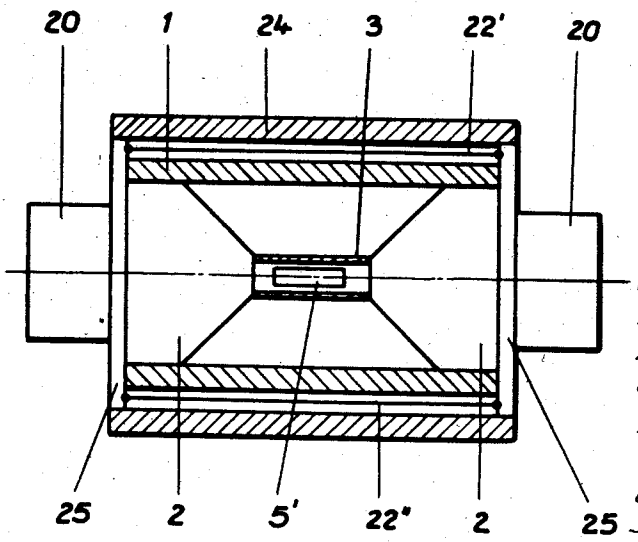

INVENTORS:
Paul Bruckner
Wolfgang Capeller
Adil Erk
Walter Gottwald
Carl W. Meyer
Ludwig Schmitz
Helmuth Tedder
by Edwin O. Greigg
ATTORNEY

June 23, 1959 P. BRUCKNER ET AL 2,892,062

ARRANGEMENT FOR INTERRUPTING ELECTRIC CURRENTS BY MEANS OF EXPLOSIVE MATERIAL

Filed Jan. 16, 1956

3 Sheets-Sheet 3

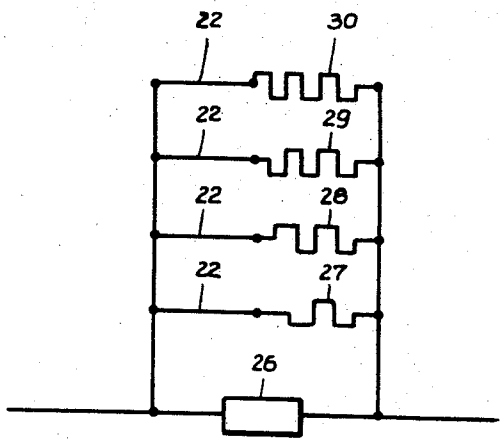

Fig. 8

Fig. 9

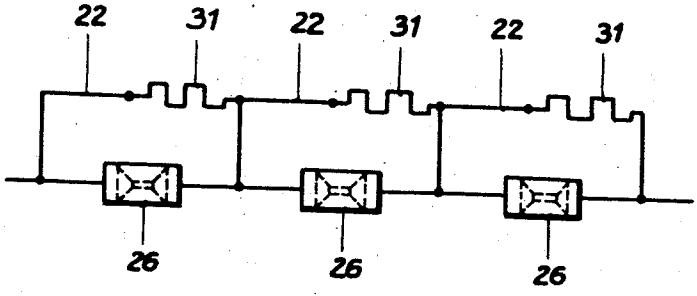

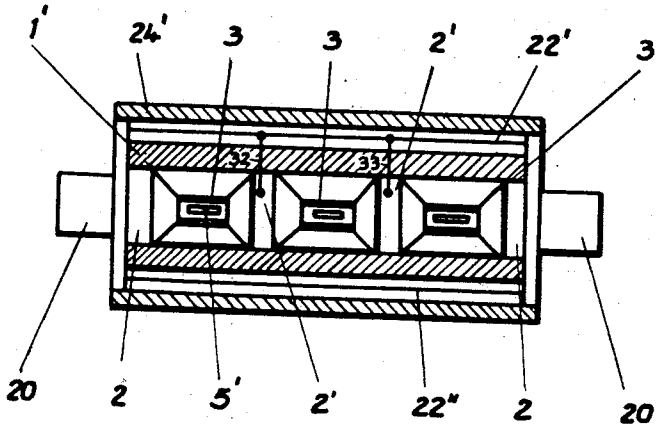

Fig. 10

INVENTORS:
Paul Bruckner
Wolfgang Capeller
Adil Erk
Walter Lotterwald
Carl W. Meyer
Ludwig Schmitz
Helmuth Vedder
by Edwin E. Greigg
ATTORNEY

United States Patent Office 2,892,062
Patented June 23, 1959

2,892,062

ARRANGEMENT FOR INTERRUPTING ELECTRIC CURRENTS BY MEANS OF EXPLOSIVE MATERIAL

Paul Brückner and Wolfgang Capeller, Ratingen, Adil Erk, Braunschweig, Walter Gottwald, Carl Wilhelm Heyser, and Ludwig Schmitz, Ratingen, and Helmuth Vedder, Rott, near Vilkerath, Germany, assignors to Calor-Emag, Ratingen, near Dusseldorf, Germany, a corporation of Germany

Application January 16, 1956, Serial No. 559,337

Claims priority, application Germany January 15, 1955

17 Claims. (Cl. 200—135)

This invention relates to arrangements for interrupting electric currents by means of explosive material.

More particularly these arrangements are suitable for a very quick interruption of high direct currents or high alternating currents in which the amount of the explosive material used to cause the interruption of the current is held to a minimum with reference to the effect to be obtained and large amounts of explosive material for exploding strong conductors are avoided.

It is known that during the very quick interruption of currents excess breaking voltages arise and it is an object of this invention to avoid such excess breaking voltages to a large extent in order to assure a dependable operation of such quick acting current interrupters.

It is a further object of this invention to interrupt high currents at high voltages with a minimum expenditure of explosive interrupting means.

Arrangements for interrupting high currents by means of explosive material are designated hereafter as explosive interrupters, and it is an object of this invention to provide means and arrangements for explosive interrupters which afford a dependable and efficient operation.

According to this invention the explosive interrupter is provided with a short hollow conductor member of smaller cross-sectional area than the main current conductor and arranged in series connection with the main conductor. The reduced cross-sectional area of the hollow conductor produces a heating of the reduced portion of the conductor, but this heat is dissipated in a sufficient manner to the heavier current conductors arranged on both sides of the reduced conductor portion.

The thin and relatively short piece of hollow conductor tubing can be exploded very rapidly by means of a small amount of explosive, particularly when the hollow conductor has previously been provided with notches. The explosive process can take place in a protective housing so that it is generally not noticeable from the outside, and the current interruption can be effected in a fraction of a milli-second.

According to the invention high excess breaking voltages can be avoided during the circuit breaking operation by the application of parallel auxiliary circuit breakers, for example fusible wires, which bring about a gradual current limitation and the high excess breaking voltages can in this manner be reduced to small values. If high voltage currents are to be broken, this can be obtained by means of a series connection of explosive interrupters each of which is designed for a smaller voltage without the necessity of providing a single explosive interrupter suitable for breaking high voltages.

The foregoing and other objects and advantages of the present invention will become apparent to those skilled in the art upon consideration of the following detailed description of the preferred embodiments thereof, reference being had to the accompanying drawings, wherein

Fig. 1 is a cross-section through an explosive interrupter.

Fig. 2 is an embodiment of the explodable conductor member.

Fig. 3 is a section along II—II of Fig. 2.

Fig. 4 is another embodiment of the explodable interrupter.

Fig. 5 is a section along IV—IV of Fig. 4.

Fig. 6 is an explosive interrupter with parallel fusible conductor.

Fig. 7 is a section through an explosive interrupter with a parallel fusible conductor.

Fig. 8 is a switching diagram.

Fig. 9 is another switching diagram.

Fig. 10 is a multiple stage explosive interrupter in cross-section.

Fig. 1 discloses a housing **1** which can be made of compressed paper or fiber or other suitable material and contains two conically formed metal parts **2** inter-connected by means of a thin hollow conducting member **3** which can be constituted for example of a brittle copper alloy material. The connection between conducting member **3** and conical parts **2** can be made by soldering or other suitable means. Metal parts **2** are also hollow and a cartridge **4** is inserted from the right through a metal piece **2** into the hollow conductor member **2**. Cartridge **4** contains an explosive charge at its inner extremity **5**. This charge can be set off electrically at any time by connecting wires **6** and **7** through switches (not shown) to a voltage source, and an ignition wire (not shown) explodes the charge in part **5**. Such ignition or firing devices are well known in the art and either mechanically or thermally actuated firing devices may be used for this purpose. As the firing means ignite the charge the tubular member **3** connecting conical parts **2** bursts and the current is interrupted. In housing **1** a circular or ring-shaped member **8** is provided which is made of a damping material such as lead. It has been found that the use of this lead ring causes the particles of tube **3** which are thrown against the housing walls during the explosion to adhere to this lead ring or lining. Canals **9** are provided in conical members **2** and the explosion gases escape through these canals to the outside. For greater strength a jacket **10** of steel or other suitable material can be placed around housing **1**.

As can be seen in the drawing the assembly described is constructed as a uniform insertion member similar to a fuse cartridge. In the present case this insertion member is clamped between pressure contacts **11** connected to current conductors **12**. Obviously the insertion member or the cartridge could be provided with knife contacts which can be inserted into clamp contacts as in the usual safety cartridges.

In some of the other drawings the housing parts and the firing devices are not shown because they are not necessary to the understanding of the arrangement. In Fig. 2 the tubular member **3** which is shown in Fig. 3 in a cross-section taken along II—II of Fig. 2 is provided with notches **13**. On both ends the tubular member **3** has a conical extension **2'** which is connected with the conical metal pieces **2** by soldering or similar means. It is clear that notches **13** facilitate the breaking of tubular member **3** by means of the explosive material so that it bursts rapidly. As shown in Fig. 3 tube **3** can also be provided with longitudinal grooves **14** in addition to notches **13**. In this manner the tendency to burst rapidly under the explosive force is greatly increased while the strength of tube **13** in a longitudinal direction is scarcely diminished. Due to the conical formation at the connecting point of parts **2'** and tube **3** an additional means is provided for inducing a scattering of the exploded parts of the tube if parts **2** are subjected to pres-

sure while providing only a limited mobility. It is usually preferable in the case of alternating current interruption to bring about a bursting of tube 3 in the proximity of the zero traversing point so that the interruption can take place without load. Switching arrangements which make this possible are well known in the switching art and can be employed in this case. However if such switching arrangements are deemed unsuitable for some particular reason it would be appropriate to use in this circuit breaking operation a gaseous or liquid arc extinguishing means as is customary with power switches. This may be particularly desirable in the case of direct current circuit breaking. In this instance the tubular formation of the conductor member to be exploded is very suitable. The extinguishing means can be introduced into the tube from the outside so that it is directly effective during the exploding operation.

In the embodiments according to Figures 4 and 5 the hollow conductor member 3 in which the explosive charge is stored is provided with several longitudinal slots 15 extending all the way to the hollow center of the tube. The extremities of tube 3 are thickened and soldered to the conical pieces 2 at 17. Above the center line of Fig. 5 the condition of tube 3 is shown prior to the explosion and below the center line the condition of the tube after the explosion has taken place. From this view it can be seen that the break in the hollow tube occurs during the explosion at soldering points 16 and that slotted tube 3 is spread out during the explosion in all directions in such a way that a sufficiently large break is created at the explosion point. In this exploding operation no parts of the tubular member 3 are completely severed. This is particularly desirable in the case where return arcing due to particles that are flying about should be prevented. With this arrangement the lead lining 8 shown in Fig. 1 can be eliminated.

In order to assure that the tubular conductor member 3 bursts in the center during the explosion a circumferential notch 13' is provided about the middle of member 3 as shown in Fig. 4. The tubular conductor is thus spread apart on both sides of the central notch 13' after bursting, as shown in Fig. 5 below the center line. However it is not essential that the bursting point be in the middle, for it can also be located toward one of the extremities of the hollow tube in the proximity of the reinforced ends. In that case the spreading of the tubular member 3 would probably take place only on the side away from the thickened end of the tube. By spreading out the slotted parts of the tubular conductor member 3 a suitable inlet nozzle for the arc extinguishing means is created by means of nozzles 18 and 19 through which the explosion gases which blast the arc can be discharged. The arrangement of Fig. 4 is shown without its housing and it is clear that into this housing (not shown) additional gaseous or liquid extinguishing means could be introduced which could also escape through nozzles 18 and 19.

Fig. 6 shows an explosive interrupter with parallel auxiliary interrupter. In safety housing 1 current conducting members 2 are electrically connected to knife contacts 20. Between members 2 the hollow conductor 3 is arranged and adapted to receive an explosive charge 5'. Above the housing electrodes 21 are located and electrically connected with knife contacts 20 and conical members 2. Between electrodes 21 a fusible wire 22 is stretched. The extinguishing chamber 23 is shown in in dotted lines. This can be an extinguishing chamber of the type usually employed for such purposes, for instance a chamber in which the arc is driven between insulating walls. The circuit breaking device can be connected by means of contacts 20 to the usual line contacts.

The current interrupting process is initiated by igniting the charge 5'. The hollow conductor is broken and the current in the main line is interrupted. This causes the current to pass directly over fusible wire 22 which is thereby caused to melt through and an arc is created between electrodes 21 which is immediately extinguished in chamber 23. As mentioned above the arc extinguishing chamber can be of any suitable type, and a chamber in which the arc is exposed to magnetic fields which elongate it, bend it or influence it otherwise is suitable. Undesirable excess breaking voltages can be effectively eliminated with such a circuit breaker.

Another embodiment of an explosive interrupter with parallel auxiliary interrupter is represented in Fig. 7. Housing 1 is surrounded here with a spaced tubular jacket 24. In the circular space between housing 1 and jacket 24 fusible wires 22' and 22'' are stretched between end plates 25. Plates 25 are electrically connected to cone pieces 2 which are provided with knife contacts 20 for connecting the circuit breaker to suitable line contacts. The circular space between jacket 24 and housing 1 containing the fuse wires can be filled with quartz sand or other suitable extinguishing means. The fuse wires can easily be so made that they melt in sequence and thus limit the current gradually so that the circuit breaking operation takes place also without unduly high excess breaking voltages.

Fig. 8 shows diagrammatically an arrangement in which several fuse wires 22 are arranged in parallel with an explosive interrupter 26. The individual fuse wires have a series connection with current limiting resistances 27, 28, 29 and 30, each of which is larger than the preceding one in the sequence mentioned. When the main current line is broken by means of the explosive interrupter 26 the arc voltage surges abruptly and would mount to a high value if the current were not transferred immediately to the fuse wires and resistances. The fuse conductors melt through in sequence due to the graduation of resistances 27, 28, 29 and 30. The arc voltage which tends to increase with the melting of each fuse conductor is reduced each time and can thus be maintained during the circuit breaking process within the desired limits.

For higher voltages it is recommended to use instead of one explosive interrupter suitable for high voltages several smaller explosive interrupters and connect them in series in order that they can be actuated simultaneously by means of a common firing device. Such series connections are known in the high voltage circuit breaker art and they have been found to be quite suitable for use in the present circuit breaker arrangement.

Fig. 9 shows three individual explosive interrupters 26 connected in series. Parallel to this series connection lies an arrangement of fuse wires 22 and resistances 31. The explosive interrupters are fired simultaneously by means of firing devices (not shown) similar to firing device 4 of Fig. 1 so that the main current path is suddenly broken in three places. Resistances 31 provide that approximately the same voltage is present at each individual interrupter. The final current interruption takes place through fuse wires 22. It is clear that the arrangement of the parallel fuse wires and resistances can be graduated as in the case of Fig. 8.

Fig. 10 shows how the diagrammatic arrangement of Fig. 9 can be assembled structurally into a single unit. In the tubular housing 1' the hollow conductors 3 extend between the conical conducting parts 2 and 2'. In these hollow conductors explosive charges 5' are located which are ignited by means of a firing device (not shown). Around housing 1' is placed a tubular jacket 24' and into the space between housing 1' and jacket 24' fuse wires 22' or 22'' are placed. The latter serve as auxiliary interrupters and simultaneously as resistances for the voltage distribution to the individual explosive interrupters. The connection between fuse wires 22' and 22'' and conical conductor members 2' is indicated at 32 and 33. In some cases these connections may be eliminated as indicated in the bottom part of the

arrangement of Fig. 10 with reference to fuse wires 22''. It is clear that in the space between housing 1' and tubular jacket 24' special current limiting resistances similar to resistances 31 of Fig. 9 can be arranged in combination with fuse wires.

While we have shown and described in detail what we believe to be the preferred form of our invention, it will be understood that various changes may be made in the shape and arrangement of the several elements thereof, without departing from the broad scope of the invention as defined in the appended claims.

We claim:

1. A circuit controlling device for breaking large currents by means of explosive, comprising a hollow conductor connected to the current circuit, the inside of said hollow conductor containing explosive which upon its ignition blasts said conductor, said explosive being contained in a cartridge inserted in said conductor and provided with its own ignition current conductors.

2. A circuit controlling arrangement according to claim 1 wherein said conductor member is electrically connected on both ends to thicker conductor members and contained in an insulated housing.

3. A circuit controlling arrangement according to claim 2 wherein the circuit breaking arrangement is an unitary structure provided with contact members and adapted to be connected into a circuit line.

4. A circuit controlling arrangement according to claim 1 wherein the hollow conductor is provided with notches which induce the bursting of the hollow conductor at definite points without impairing the longitudinal stability of said hollow conductor.

5. A circuit controlling arrangement according to claim 4 wherein the hollow conductor member is provided with longitudinal slots which may be fractured during the explosion.

6. A circuit controlling arrangement according to claim 2 wherein an outlet canal in said housing is adapted to permit the escape of explosive gases to the exterior of said device.

7. A circuit controlling arrangement according to claim 2 wherein the housing is provided with an exterior concentric protective jacket.

8. A circuit controlling arrangement according to claim 2 wherein a concentric lining is provided within the housing and is adapted to retain the parts of the hollow conductor which are scattered during the explosion.

9. A circuit controlling arrangement according to claim 1 comprising an auxiliary circuit breaking arrangement connected in parallel and an arc extinguishing chamber.

10. A circuit controlling arrangement according to claim 1 comprising an auxiliary circuit breaking arrangement consisting of at least one fusible conductor wire.

11. A circuit controlling arrangement according to claim 10 comprising fusible wire conductors connected in parallel and provided with resistances of different values.

12. A circuit controlling arrangement according to claim 11 wherein the explosive interrupter the arc extinguishing chamber and the auxiliary circuit breaking arrangement form a unitary structure.

13. A circuit controlling arrangement according to claim 11 wherein the explosive interrupter housing is surrounded by a tubular jacket in spaced relationship thereto and fusible wires are arranged in the space between said housing and said jacket.

14. A circuit controlling arrangement according to claim 1 wherein the explosive interruptor consists of a plurality of interrupters connected in series.

15. A circuit controlling arrangement according to claim 14 comprising a resistance arrangement located in the auxiliary current path for distributing the voltage.

16. A circuit controlling arrangement according to claim 15 comprising current limiting resistances associated with auxiliary current interrupting devices which serve simultaneously as voltage dividing resistances.

17. A circuit controlling arrangement according to claim 14 wherein the individual explosive interrupters are formed as a unitary structure provided with connector contacts.

References Cited in the file of this patent

UNITED STATES PATENTS

466,761	Wotton	Jan. 5, 1892
1,221,275	Bleecker	Apr. 3, 1917
1,818,822	Stafford	Aug. 11, 1931
1,856,701	Gerdien	May 3, 1932
1,917,315	Murray	July 11, 1933
2,041,590	Brown	May 19, 1936
2,175,250	Burrows et al.	Oct. 10, 1939
2,281,266	Carlisle et al.	Apr. 28, 1942
2,306,153	Biermanns et al.	Dec. 22, 1942
2,337,504	Strom	Dec. 21, 1943
2,548,112	Kaminky	Apr. 10, 1951
2,551,858	Stoelting et al.	May 8, 1951
2,721,240	Filbert	Oct. 18, 1955

FOREIGN PATENTS

563,849	Great Britain	Aug. 31, 1944