(12) INTERNATIONAL APPLICATION PUBLISHED UNDER THE PATENT COOPERATION TREATY (PCT)

(19) World Intellectual Property Organization
International Bureau

(43) International Publication Date
31 May 2018 (31.05.2018)

WIPO | PCT

(10) International Publication Number
WO 2018/098433 A1

(51) International Patent Classification:
A61B 18/14 (2006.01) *A61B 18/00* (2006.01)
A61B 10/02 (2006.01)

(21) International Application Number:
PCT/US2017/063281

(22) International Filing Date:
27 November 2017 (27.11.2017)

(25) Filing Language: English

(26) Publication Language: English

(30) Priority Data:
62/426,825 28 November 2016 (28.11.2016) US
62/426,816 28 November 2016 (28.11.2016) US

(71) Applicant: **DFINE, INC.** [US/US]; 1600 West Merit Parkway, South Jordan, Utah 84095 (US).

(72) Inventors: **PURDY, Craig**; 1225 Vienna Drive, SPC 947, Sunnyvale, California 94089 (US). **BALBIERZ, Dan**; 973 Cambridge Road, Redwood City, California 94061 (US).

(74) Agent: **MCCAMMON, Jason B.**; Stoel Rives LLP, 201 So. Main Street, Suite 1100, One Utah Center, Salt Lake City, Utah 84111 (US).

(81) Designated States *(unless otherwise indicated, for every kind of national protection available)*: AE, AG, AL, AM, AO, AT, AU, AZ, BA, BB, BG, BH, BN, BR, BW, BY, BZ, CA, CH, CL, CN, CO, CR, CU, CZ, DE, DJ, DK, DM, DO, DZ, EC, EE, EG, ES, FI, GB, GD, GE, GH, GM, GT, HN, HR, HU, ID, IL, IN, IR, IS, JO, JP, KE, KG, KH, KN, KP, KR, KW, KZ, LA, LC, LK, LR, LS, LU, LY, MA, MD, ME, MG, MK, MN, MW, MX, MY, MZ, NA, NG, NI, NO, NZ, OM, PA, PE, PG, PH, PL, PT, QA, RO, RS, RU, RW, SA, SC, SD, SE, SG, SK, SL, SM, ST, SV, SY, TH, TJ, TM, TN, TR, TT, TZ, UA, UG, US, UZ, VC, VN, ZA, ZM, ZW.

WO 2018/098433 A1

(54) **Title:** TUMOR ABLATION DEVICES AND RELATED METHODS

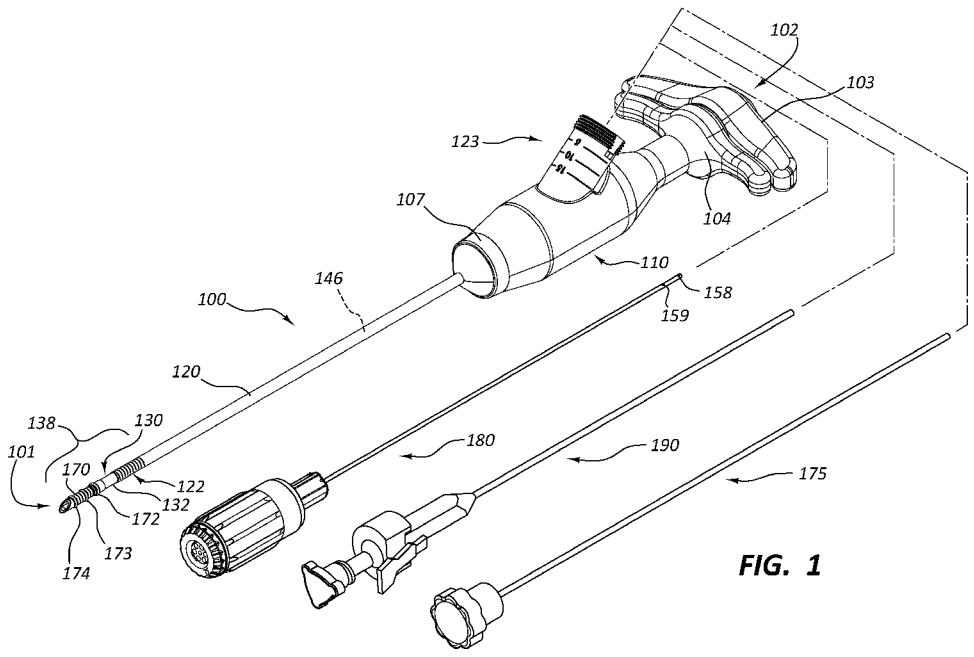

FIG. 1

(57) **Abstract:** Spinal tumor ablation devices and related systems and methods are disclosed. Some spinal tumor ablation devices include electrodes that are fixedly offset from one another. Some spinal tumor ablation devices include a thermal energy delivery probe that has at least one temperature sensor coupled thereto. The position of the at least one temperature sensor relative to other components of the spinal tumor ablation device may be controlled by adjusting the position of the thermal energy delivery probe in some spinal tumor ablation devices. Some spinal tumor ablation devices are configured to facilitate the delivery of a cement through a utility channel of the device.

[Continued on next page]

(84) Designated States *(unless otherwise indicated, for every kind of regional protection available)*: ARIPO (BW, GH, GM, KE, LR, LS, MW, MZ, NA, RW, SD, SL, ST, SZ, TZ, UG, ZM, ZW), Eurasian (AM, AZ, BY, KG, KZ, RU, TJ, TM), European (AL, AT, BE, BG, CH, CY, CZ, DE, DK, EE, ES, FI, FR, GB, GR, HR, HU, IE, IS, IT, LT, LU, LV, MC, MK, MT, NL, NO, PL, PT, RO, RS, SE, SI, SK, SM, TR), OAPI (BF, BJ, CF, CG, CI, CM, GA, GN, GQ, GW, KM, ML, MR, NE, SN, TD, TG).

Published:

— *with international search report (Art. 21(3))*

TUMOR ABLATION DEVICES AND RELATED METHODS

RELATED APPLICATIONS

[0001] This application claims priority to United States Provisional Application No. 62/426,825, filed on November 28, 2016 and titled "Tumor Ablation Devices and Related Methods," and United States Provisional Application No. 62/426,816, filed on November 28, 2016 and titled "Tumor Ablation Devices and Related Methods," both of which are hereby incorporated by reference in their entireties.

TECHNICAL FIELD

[0002] The present disclosure relates generally to the field of medical devices. More particularly, some embodiments relate to spinal tumor ablation devices and related systems and methods.

BRIEF DESCRIPTION OF THE DRAWINGS

[0003] The written disclosure herein describes illustrative embodiments that are non-limiting and non-exhaustive. Reference is made to certain of such illustrative embodiments that are depicted in the figures, in which:

[0004] FIG. 1 is a perspective view of a medical device assembly comprising a medical device and three medical implements.

[0005] FIG. 2 is an exploded perspective view of the medical device of FIG. 1.

[0006] FIG. 3 is a side view of a portion of the medical device of FIG. 1 with a portion of the housing cut away to expose certain components.

[0007] FIG. 4 is another side view of a portion of the medical device of FIG. 1 with a portion of the housing cut away to expose certain components.

[0008] FIG. 5 is a perspective view of the medical device of FIG. 1, with a top half of the housing and an annular band removed to expose certain components.

[0009] FIG. 6 is another perspective view of the medical device of FIG. 1, with the bottom half of the housing and an annular band removed to expose certain components.

[0010] FIG. 7 is a cross-sectional view of the medical device of FIG. 1

[0011] FIG. 8 is another cross-sectional view of the medical device of FIG. 1.

[0012] FIG. 9 is a perspective view of a portion of the medical device of FIG. 1.

[0013] FIG. 10 is a perspective view of a portion of a handle of the medical device of FIG. 1.

[0014] FIG. 11 is a cross-sectional view of a portion of the medical device of FIG. 1 showing an articulating distal portion in a linear configuration.

[0015] FIG. 12 is a cross-sectional view of a portion of the medical device of FIG. 1 showing an articulating distal portion in a first curved configuration.

[0016] FIG. 13 is a cross-sectional view of a portion of the medical device of FIG. 1 showing an articulating distal portion in a second curved configuration.

[0017] FIG. 14 is a perspective view of a portion of the medical device of FIG. 1, wherein the perspective view shows insertion of an elongate cutting instrument into a port.

[0018] FIG. 15 is a perspective view of a portion of the medical device of FIG. 1, wherein the perspective view shows rotation of the elongate cutting instrument relative to the port.

[0019] FIG. 16 is a cross-sectional view of the medical device of FIG. 1 with the elongate cutting instrument in a fully inserted configuration.

[0020] FIG. 17 is a perspective view of a portion of the medical device of FIG. 1 that shows a distal end of the medical device when the elongate cutting instrument is in the fully inserted configuration.

[0021] FIG. 18 is a perspective view of a portion of the medical device of FIG. 1, wherein the perspective view shows insertion of a thermal energy delivery probe into a port.

[0022] FIG. 19 is a perspective view of a portion of the medical device of FIG. 1, wherein the perspective view shows rotation of the thermal energy delivery probe relative to the port.

[0023] FIG. 20 is a cross-sectional view of the medical device of FIG. 1 showing a thermal energy delivery probe that has been fully inserted into the port.

[0024] FIG. 20A is a perspective view of a distal portion of a medical device, according to another embodiment.

[0025] FIG. 21 is a perspective view of a portion of the medical device of FIG. 1 with various components removed to expose other components, wherein the perspective view shows an electrical connection between the thermal energy delivery probe and the tubular conductors.

[0026] FIG. 22 is a perspective view of a cement delivery cartridge.

[0027] FIG. 23 is a perspective view of the medical device of FIG. 1 showing insertion of the cement delivery cartridge into the port.

[0028] FIG. 24 is a perspective view of the medical device of FIG. 1 showing withdrawal of a stylet of the cement delivery cartridge after the cement delivery cartridge has been fully inserted into the port.

[0029] FIG. 25 is a perspective view of the medical device of FIG. 1 showing a fully inserted cement delivery cartridge that is configured to facilitate cement delivery.

[0030] FIG. 26 is a perspective view of a medical device according to another embodiment.

[0031] FIG. 27 is a cross-sectional view of the medical device of FIG. 26.

DETAILED DESCRIPTION

[0032] Spinal tumor ablation devices can be used to treat a tumor in a vertebra of a patient. For example, in some embodiments, a distal end of a spinal tumor ablation device may be inserted into a vertebra of a patient. In some instances, once the distal end of the spinal tumor ablation device is inserted into the vertebra of the patient, an articulating distal portion of the spinal tumor ablation device may be manipulated to position the tumor ablation device at a proper location within a tumor of the patient. The spinal tumor ablation device may then be activated. Activation of the spinal tumor ablation device may cause an electrical current (e.g., a radiofrequency current) to pass between a first electrode and a second electrode of the spinal tumor ablation device. As the electrical current passes between the first electrode and the second electrode, the current may pass through tissue of the patient, thereby heating (and potentially killing) the adjacent tissue (e.g., tumor cells). One or more temperature sensors may be used to measure the temperature of the heated tissue. Based on the information obtained from the one or more temperature sensors, the duration, position, and/or magnitude of the delivered thermal energy may be tailored to kill tissue within a desired region while avoiding the delivery of lethal amounts of thermal energy to healthy tissue. In some embodiments, once the tumor has been treated with thermal energy (e.g., radiofrequency energy), a cement may be delivered through a utility channel of the spinal tumor ablation device to stabilize the vertebra of the patient.

[0033] The components of the embodiments as generally described and illustrated in the figures herein can be arranged and designed in a wide variety of different configurations. Thus, the following more detailed description of various embodiments, as represented in the figures, is not intended to limit the scope of the present disclosure, but is merely representative of various embodiments. While

various aspects of the embodiments are presented in drawings, the drawings are not necessarily drawn to scale unless specifically indicated.

[0034] The phrase "coupled to" is broad enough to refer to any suitable coupling or other form of interaction between two or more entities. Two components may be coupled to each other even though they are not in direct contact with each other. For example, two components may be coupled to one another through an intermediate component. The phrases "attached to" or "attached directly to" refer to interaction between two or more entities which are in direct contact with each other and/or are separated from each other only by a fastener of any suitable variety (e.g., an adhesive). The phrase "fluid communication" is used in its ordinary sense, and is broad enough to refer to arrangements in which a fluid (e.g., a gas or a liquid) can flow from one element to another element when the elements are in fluid communication with each other.

[0035] The terms "proximal" and "distal" are opposite directional terms. For example, the distal end of a device or component is the end of the component that is furthest from the practitioner during ordinary use. The proximal end refers to the opposite end, or the end nearest the practitioner during ordinary use.

[0036] FIGS. 1–13 provide various views of a medical device 100 (or portions thereof) or a medical device assembly for use in a spinal tumor ablation procedure. More particularly, FIG. 1 provides an assembled perspective view of a medical device assembly comprising a medical device 100 and related medical implements 175, 180, 190. FIG. 2 provides an exploded perspective view of the medical device 100. FIG. 3 is a side view of the medical device 100, with various components removed to expose other components. FIG. 4 is another side view of the medical device 100 with various component removed to expose other components. FIG. 5 is a perspective view of the medical device 100, with a first portion of the housing 110 and the annular band 107 removed to expose certain components. FIG. 6 is another perspective view of the medical device 100, with a second portion of the housing 110 and the annular band 107 removed to expose other components. FIGS. 7 and 8 provide alterative cross-sectional views of the medical device 100. FIGS. 9 and 10 provide perspective views showing different portions of a handle 102 of the medical device 100. FIG. 11 is a cross-sectional view of a distal portion of the medical device 100 in a linear configuration. FIGS. 12 and 13 are cross-sectional views of the distal portion of the medical device 100 in different non-linear configurations.

[0037] As shown in FIGS. 1–13, the medical device 100 includes, among other elements, a first tubular conductor 120, a tubular insulator 130, a second tubular conductor 140, a pointed distal end 101, an elongate shaft 150, a side port 123, an outer sleeve 170, a housing 110, and a handle 102.

[0038] The first tubular conductor 120 may be a metallic tube that extends from a proximal anchor 121 (e.g., a metallic anchor) to an open distal end. In some embodiments, the first tubular conductor 120 is rigid (or is rigid along most of its length). In some embodiments, the first tubular conductor 120 includes a plurality of slots 122 adjacent the open distal end of the first tubular conductor 120. The slots 122 may be perpendicular or angled relative to the primary axis of the first tubular conductor 120. In other embodiments, the first tubular conductor 120 lacks a plurality of slots.

[0039] The tubular insulator 130 may be at least partially disposed within the first tubular conductor 120. For example, the tubular insulator 130 may extend through the first tubular conductor 120. More particularly, in some embodiments, the tubular insulator 130 extends through the first tubular conductor 120 such that a proximal end of the tubular insulator 130 is proximal of the first tubular conductor 120 and a distal end of the tubular insulator 130 is distal of the first tubular conductor 120. The tubular insulator 130 may be made from any suitable insulating material, such as polymeric insulating materials. Examples of suitable polymeric insulating materials include polyimide, polyetheretherketone (PEEK), and polyether block amides (e.g., PEBAX®).

[0040] The second tubular conductor 140 may be a metallic tube that extends from a proximal anchor 141 (e.g., a metallic anchor) to an open distal end. In some embodiments, the second tubular conductor 140 is rigid (or is rigid along most of its length). The second tubular conductor 140 may be at least partially disposed within the tubular insulator 130. For example, the second tubular conductor 140 may extend through the tubular insulator 130 such that a distal portion 144 of the second tubular conductor 140 is disposed distal of the tubular insulator 130. The second tubular conductor 140 may form a utility channel 146 that extends from a proximal opening of the second tubular conductor 140 to a distal opening at the distal end of the second tubular conductor 140. In some embodiments, the portion 144 of the second tubular conductor 140 that is disposed distal of the tubular insulator 130 is longitudinally offset from the first tubular conductor 120 by an exposed portion 132 of

the tubular insulator 130. The exposed portion 132 of the tubular insulator 130 may have a length of between 0.3 cm and 1.0 cm. Stated differently, the gap between the distal portion 144 of the second tubular conductor 140 and the distal end of the first tubular conductor 120 may be between 0.3 cm and 1.0 cm.

[0041] In some embodiments, the second tubular conductor 140 includes a plurality of slots 148 adjacent the distal end of the second tubular conductor 140. The slots 148 may be perpendicular or angled relative to the primary axis of the second tubular conductor 140. The plurality of slots 148 may be disposed opposite the slots 122 of the first tubular conductor 120.

[0042] In some embodiments, the anchor 121 at the proximal end of the first tubular conductor 120 may be electrically coupled to an electrical contact 188 via a wire 117. Similarly, in some embodiments, the anchor 141 at the proximal end of the second tubular conductor 140 may be electrically coupled to another electrical contact 189 via another wire 118. In some embodiments, the wires 117, 118 may travel through channels in the housing 110. In some embodiments, one or both of the electrical contacts 188, 189 are leaf spring contacts. When the electrical contacts 188, 189 are coupled to a power source, the first tubular conductor 120 and the second tubular conductor 140 may function as electrodes with opposite polarity. In some embodiments, the electrical contacts 188, 189 are secured to the housing 110 via one or more screws 109.

[0043] The elongate shaft 150 may be at least partially disposed within the utility channel 146 of the second tubular conductor 140. In some embodiments, the elongate shaft 150 is coupled to the second tubular conductor 140 such that manipulation of the elongate shaft 150 causes articulation of an articulating distal portion 138 of the medical device 100. For example, in some embodiments, only a distal portion 151 of the elongate shaft 150 is attached (e.g., welded) to the second tubular conductor 140 (see FIGS. 11–13) while the remaining portion of the elongate shaft 150 is unattached from the second tubular conductor 140. In other words, the distal portion 151 of the elongate shaft 150 may be attached to the second tubular conductor 140 adjacent a distal end of the second tubular conductor 140. By displacing the elongate shaft 150 relative to the proximal end of the second tubular conductor 140 as described in greater detail below in connection with reference to FIGS. 11–13, the articulating distal portion 138 of the medical device 100 may be

displaced (e.g., transition from a linear configuration to a non-linear configuration and vice versa).

[0044] In the depicted embodiment, the elongate shaft 150 includes a bulbous proximal end 152. Stated differently, the elongate shaft 150 may include a ball at its proximal end. A distal portion 154 of the elongate shaft 150 may have a semicircular (e.g., D-shaped) cross-section. Due, in part, to the semicircular cross section of the elongate shaft 150, the elongate shaft 150 may flex when a force is applied to the elongate shaft 150 and then return to a linear position when the force is removed. The distal portion 154 of the elongate shaft 150 may extend from the distal end of the elongate shaft 150 to a position that is proximal of the proximal opening of the second tubular conductor 140. In some embodiments, the bulbous proximal end 152 of the elongate shaft 150 and the distal portion 154 of the elongate shaft 150 are separated by an intermediate portion 156 of the elongate shaft 150 that has a circular cross-section.

[0045] Due to the semicircular shape of the distal portion 154 of the elongate shaft 150, the elongate shaft 150 may occupy only a portion of the space within the utility channel 146 of the second tubular conductor 140. The remaining portion (e.g., a D-shaped portion) of the utility channel 146 may be used for other purposes, such as for obtaining a biopsy sample, positioning temperature sensors, and/or delivering cement to a vertebra of a patient as described in greater detail below.

[0046] The port 123 may be configured to provide access to a proximal opening of the utility channel 146. Stated differently, the port 123 may be in fluid communication with the utility channel 146 of the second tubular conductor 140. In the depicted embodiment, the port 123 is a side port that is disposed proximal of the second tubular conductor 140. The port 123 may be designed to accommodate various medical implements, such as one or more of a thermal energy delivery probe 180 having one or more temperature sensors 158, 159, an elongate cutting instrument 175, and a cement delivery cartridge 190 (see FIG. 1). Stated differently, in some embodiments, the medial device 100 is configured to permit sequential (1) insertion of an elongate cutting instrument 175 into the port 123, (2) removal of the elongate cutting instrument 175 from the port 123, (3) insertion of a thermal energy delivery probe 180 into the port 123, (4) removal of the thermal energy delivery probe 180 from the port 123, and (5) insertion of the cement delivery cartridge 190 across the port 123. In some embodiments, the port 123 includes indicia that help

the practitioner to determine the position of one or more temperature sensors as described in greater detail below.

[0047] The outer sleeve 170 may be attached (e.g., laser welded) to the distal portion 144 of the second tubular conductor 140 (see FIG. 11). In the depicted embodiment, the outer sleeve 170 is offset from the first tubular conductor 120. In other words, the outer sleeve 170 is not attached to the first tubular conductor 120. In some embodiments, the outer sleeve 170 generally has an outer diameter that is substantially identical to the outer diameter of the first tubular conductor 120. In some embodiments, the outer sleeve 170 includes one or more protrusions 172, 173, 174 (e.g., radiopaque protrusions) or intrusions (not shown). The one or more protrusions 172, 173, 174 or intrusions may facilitate fluoroscopic visualization as described in greater detail below. In some embodiments, the outer sleeve 170 is a metallic tube.

[0048] In some embodiments, the medical device 100 has a pointed distal end 101. The pointed distal end 101 may be formed from one or both of the second tubular conductor 140 and the outer sleeve 170. The pointed distal end 101 may be configured to facilitate penetration of bone within the vertebra of a patient.

[0049] The housing 110 may be configured to encompass and/or protect various components of the medical device 100. For example, in the depicted embodiment, the housing 110 encompasses, at least in part, a rotatable sleeve 161, a casing 166, an O-ring 164, and a guide insert 108. In some embodiments, the rotatable sleeve 161 has the general shape of a top hat. Indeed, in the depicted embodiment, the rotatable sleeve 161 includes an annular brim 165 that extends radially outward from the base of the rotatable sleeve 161. Stated differently, the rotatable sleeve 161 may comprise a brim 165 that extends radially outward. The O-ring 164 may be positioned around the brim 165 of the rotatable sleeve 161. The rotatable sleeve 161 may include interior threads 162 that are configured to mate with exterior threads 167 on the casing 166. The casing 166 may be designed to encompass a proximal end of an elongate shaft 150. For example, in some embodiments, the casing 166 encompasses the bulbous proximal end 152 of the elongate shaft 150. In some embodiments, the casing 166 is formed by attaching a first half of the casing 166 that includes a hemisphere-shaped indentation with a second half of the casing 166 that includes another hemisphere-shaped indentation. The indentations on each half of

the casing 166 may cooperate to form a spherical pocket that accommodates a bulbous proximal end 152 of the elongate shaft 150.

[0050] The guide insert 108 may be disposed within the housing 110 to facilitate insertion of one or more elongate instruments into the utility channel 146 of the second tubular conductor 140. For example, in some embodiments, the guide insert 108 is formed from a first half and a second half that together combine to form a funnel-shaped surface that directs elongate instruments into the utility channel 146.

[0051] The housing 110 may include various recesses (see, e.g., FIG. 2). For example, the housing 110 may include a first recess 112 that is configured to accommodate both the rotatable sleeve 161 and the casing 166 that is partially disposed within the rotatable sleeve 161. The first recess 112 may jut out to form a disk-shaped cavity 113 that is designed to snugly accommodate the annular brim 165 of the rotatable sleeve 161. The housing 110 may also include a second recess 114 that is designed to accommodate (e.g., secure) an anchor 141 at the proximal end of the second tubular conductor 140. The housing 110 may also include a third recess 116 that is configured to accommodate (e.g., secure) an anchor 121 at the proximal end of the first tubular conductor 120. In the depicted embodiment, the first recess 112 is disposed proximal of the second recess 114, and the second recess 114 is disposed proximal of the third recess 116. Due to the relative position of the second recess 114 relative to the third recess 116, the anchors 121, 141 (and therefore the proximal ends of the tubular conductors 120, 140) are longitudinally offset from one another. Stated differently, the anchor 121 at the proximal end of the first tubular conductor 120 may be disposed distal of the anchor 141 at the proximal end of the second tubular conductor 140. In this manner, at least a portion of the second tubular conductor 140 is fixedly disposed relative to the first tubular conductor 120. A portion 134 of the tubular insulator 130 may be disposed around the second tubular conductor 140 within the gap between the anchor 121 for the first tubular conductor 120 and the anchor 141 for the second tubular conductor 140. In some embodiments, the gap is greater than 0.5 cm. For example, in some embodiments, the gap is between 0.5 and 2.0 cm in length.

[0052] In some embodiments, the first portion of the housing 110 and the second portion of the housing 110 are held together by one or more of an adhesive, a fastener, and annular bands 106, 107.

[0053] The handle 102 may include a first portion 103 (e.g., a proximal portion) and a second portion 104 (e.g., a distal portion). The first portion 103 of the handle 102 may include one or more flexible arms and one or more teeth 105 that project radially inward from the one or more flexible arms. The one or more teeth 105 may be configured to engage with one or more outer protrusions 163 on the rotatable sleeve 161. The first portion 103 of the handle 102 may be rotatable relative to the second portion 104 of the handle 102. As described in further detail below, rotation of the first portion 103 of the handle 102 may cause displacement (e.g., articulation) of a distal portion 138 of the medical device 100. Stated differently, manipulation of the handle 102 may cause displacement of the articulating distal portion 138. In some embodiments, the second portion 104 of the handle 102 is integrally formed with the housing 110.

[0054] The medical device 100 may be used in one or more medical procedures, such as procedures to treat a spinal tumor in one or more vertebral bodies of a patient. For example, some embodiments of a medical procedure may involve obtaining the medical device 100 and inserting a distal end 101 of the medical device 100 into a vertebral body of a patient (e.g., a sedated patient in the prone position). In embodiments in which the distal end 101 of the medical device 100 is pointed, the pointed distal end 101 may facilitate penetration of bone within the vertebra of the patient. In some embodiments, the medical device 100 has sufficient strength to prevent buckling of the medical device 100 as the distal end of the medical device 100 is inserted within a vertebra (e.g., across the cortical bone) of the patient. In some embodiments, the distal end 101 of the medical device 100 is inserted into the patient via an introducer (not shown). In other embodiments, the distal end 101 of the medical device 100 is inserted into the patient without using an introducer.

[0055] In some circumstances, and with particular reference to FIGS. 14–17, once the distal end 101 of the medical device 100 is disposed within a vertebra of the patient, an elongate cutting instrument 175 may be inserted through the port 123 of the medical device 100 and into the utility channel 146 of the second tubular conductor 140. The guide insert 108 may provide a funnel shaped opening that guides the elongate cutting instrument 175 into the utility channel 146. The elongate cutting instrument 175 may include an elongate shaft 176 that terminates in a serrated end 177 (see FIG. 17). The elongate shaft 176 may be flexible, thereby allowing the elongate shaft 176 to adopt a non-linear configuration. As the elongate

cutting instrument 175 is inserted through the port 123, the serrated end 177 of the elongate shaft 176 may emerge from an opening at the distal end 101 of the utility channel 146 and enter into tissue of the patient. By rotating the elongate cutting instrument 175 as shown in FIG. 15, the serrated end 177 of the elongate cutting instrument 175 may cut into tissue of the patient to obtain a biopsy sample. Once the biopsy sample has been cut from the patient, the elongate cutting instrument 175 may be removed from the patient, and the sample may subjected to one or more tests.

[0056] In some embodiments, the elongate cutting instrument 175 includes interior threads 178 that mate with exterior threads 118 on the port 123 (see FIG. 16). Mating of the interior threads 178 of the elongate cutting instrument 175 with exterior threads 124 on the port 123 may help a practitioner determine or estimate the position of the serrated end 177 of the elongate cutting instrument 175.

[0057] In some embodiments, once the distal end 101 of the medical device 100 is disposed within a vertebra of the patient, the articulating distal portion 138 of the medical device 100 may be displaced. For example, the articulating distal portion 138 of the medical device 100 may be transitioned from a linear configuration (FIG. 11) to one or more of a non-linear configuration (FIGS. 12 and 13). To effectuate this transition, the proximal portion 103 of the handle 102 may be rotated relative to the housing 110. As the proximal portion 103 of the handle 102 is rotated, the inward-extending teeth 105 may engage with protrusions 163 on the rotatable sleeve 161, thereby causing the rotatable sleeve 161 to rotate.

[0058] As the rotatable sleeve 161 is rotated, the casing 166 is proximally or distally displaced relative to the housing 110. More specifically, due to the interaction of the interior threads 162 of the rotatable sleeve 161 with the exterior threads 167 of the casing 166, the casing 166 is displaced in a proximal direction when the rotatable sleeve 161 is rotated in a first direction and in a distal direction when the rotatable sleeve 161 is rotated in a second direction that is opposite to the first direction. In the depicted embodiment, when the rotatable sleeve 161 is rotated, the rotatable sleeve 161 is not appreciably displaced in a proximal direction or a distal direction due to the interactions of the O-ring 164 and/or the brim 165 of the rotatable sleeve 161 with the cavity 113 of the first recess 112. In other words, in some embodiments, the rotatable sleeve 161 does not move in a proximal direction or a distal direction with respect to the housing 110 because the rotatable sleeve 161 is snugly positioned

within the disk-shaped cavity 113 of the first recess 112. In the depicted embodiment, the casing 166 does not rotate due to the interaction of one or more flat surfaces of the casing 166 with the first recess 112.

[0059] As the casing 166 is displaced in a proximal direction or a distal direction, the casing 166 may exert a force on the elongate shaft 150, thereby causing the elongate shaft 150 to be displaced in a proximal direction or in a distal direction relative to the housing 110, the anchors 121, 141, and/or at least a portion of the second tubular body 140. Stated differently, due to the engagement of the casing 166 with the bulbous proximal end 152 of the elongate shaft 150, the casing 166 may exert a proximal or distal force on the elongate shaft 150, causing the elongate shaft 150 to be displaced in a proximal direction or a distal direction.

[0060] As the elongate shaft 150 is displaced in a distal direction, the distal portion 138 of the medical device 100 may transition from the linear configuration (FIG. 11) to a non-linear configuration (FIG. 12) in which the slots 148 of the second tubular conductor 140 are disposed on the convex side of the bend, and the slots 122 of the first tubular conductor 120 are disposed on the concave side of the bend. In contrast, when the elongate shaft 150 is displaced in a proximal direction, the distal portion 138 of the medical device 100 may transition to a non-linear configuration in which the slots 148 of the second tubular conductor 140 are disposed on the concave side of the bend while the slots 122 of the first tubular conductor 120 are disposed on the convex side of the bend (see FIG. 13). As the elongate shaft 150 is displaced in proximal and distal directions, the distal portion 138 of the medical device 100 may transition from a linear configuration to a non-linear configuration in only a single plane. Stated differently, in some embodiments, movement of the distal portion 138 of the medical device 100 is limited to a single plane. By rotating the rotatable sleeve 161 a selected amount, the articulating distal portion 138 may be bent to a selected degree.

[0061] In some instances, articulation of the distal portion 138 of the medical device 100 may facilitate placement of the distal portion 138 of the medical device 100 at a desired location for ablation. Stated differently, the medical device 100 may have an active steering capability that enables navigation to and within a tumor. In some instances, articulation of the distal portion 138 of the medical device 100 may additionally or alternatively mechanically displace tissue (e.g., tumor cells) within the vertebra of the patient. For example, the medical device 100 may function as an

articulating osteotome that enables site-specific cavity creation. Stated differently, the articulating distal portion 138 of the medical device 100 may be robust enough to facilitate navigation through hard tissue of a patient. Thus, in the manner described above, manipulation of the handle 102 may cause displacement of both the elongate shaft 150 and the articulating distal portion 138 of the medical device 100. Stated differently, the practitioner may articulate a distal portion 138 of the medical device 100 such that the distal portion 138 transitions from a linear configuration to a non-linear configuration (and vice versa).

[0062] In some embodiments, the medical device 100 is configured to prevent a practitioner from exerting an excessive amount of torque on the rotatable sleeve 161, which could potentially damage one or more components (e.g., the elongate shaft 150 or the articulating distal portion 138) of the medical device 100. For example, in some embodiments, the one or more teeth 105 that project radially inward from arms of the proximal portion 103 of the handle 102 (see FIG. 10) may be configured to deflect outward when too much torque is provided, thereby causing the proximal portion 103 of the handle 102 to disengage from the protrusions 163 on the rotatable sleeve 161 (see FIG. 9). More particularly, at a selected torque—for example a torque ranging from greater than about 0.5 inch-pounds but less than about 7.5 inch-pounds—the proximal portion 103 of the handle 102 may disengage from the protrusions 163 on the rotatable sleeve 161. Such disengagement prevents the practitioner from exerting an excessive amount of force on the rotatable sleeve 161. Stated differently, the proximal portion 103 of the handle 102 may function as a torque limiter.

[0063] Once the distal tip 101 of the medical device 100 has been inserted into the patient and the articulating distal portion 138 of the medical device has been positioned at the desired location (e.g., within a tumor) in a preferred orientation (e.g., such that the distal portion 138 is bent), the medical device 100 may be activated for ablation within a vertebra of a patient such that an electrical current flows between the distal portion 144 of the second tubular conductor 140 to the first tubular conductor 120 via tissue within the vertebra of the patient. Stated differently, the first tubular conductor 120 may function as first electrode and the second tubular conductor 140 may function as a second electrode such that an electrical current flows between the first electrode and the second electrode via tissue within a vertebral body of the patient. In some embodiments, the temperature of tissue within

the vertebral body of the patient may be measured as the electrical current flows between the first electrode and the second electrode. In some embodiments, the process of treating a spinal tumor does not involve advancement or retraction of the electrodes relative to one another. In some embodiments, the process of treating a spinal tumor does not involve displacement of the first electrode and/or the second electrode via a spring. Stated differently, in some embodiments, neither the first electrode nor the second electrode is coupled to a spring.

[0064] To activate the medical device 100 for ablation, the practitioner may, as shown in FIGS. 18–21, insert a thermal energy delivery probe 180 through the port 123 such that the thermal energy delivery probe 180 is at least partially disposed within the utility channel 146 of the second tubular conductor 140. The guide insert 108 may facilitate such insertion by guiding the thermal energy delivery probe 180 into the utility channel 146. In the depicted embodiment, the thermal energy delivery probe 180 includes a shell 186, a main body 187, a stylet 181, a first electrical contact 182, a second electrical contact 183, and an adaptor 184 for connecting to a power supply. In some embodiments, the shell 186 of the thermal energy delivery probe 180 is rotatable relative to a main body 187 of the thermal energy delivery probe 180. In some embodiments, the shell 186 of the thermal energy delivery probe 180 may be rotated (see FIG. 19) relative to the port 123 to selectively couple the thermal energy delivery probe 180 to the port 123. In some embodiments, the thermal energy delivery probe 180 may further include interior threads 157 that are configured to engage with exterior threads 124 on the port 123. In other words, rotation of the thermal energy delivery probe 180 relative to the port 123 may cause thread-based displacement of the thermal energy delivery probe 180 relative to the second tubular conductor 140. Stated differently, rotating the thermal energy delivery probe 180 relative to a side port 123 of the medical device 100 may result in adjustment of the position(s) of one or more temperature sensors 158, 159 that are attached to the stylet 181 of the thermal energy delivery probe 180.

[0065] Upon insertion, the first electrical contact 182 of the thermal energy delivery probe 180 may be in electrical communication with the electrical contact 188 of the medical device 100, and the second electrical contact 183 may be in electrical communication with the electrical contact 189 of the medical device 100. In some embodiments, one or both of the electrical contacts 188, 189 are leaf spring contacts. The leaf spring contacts 188, 189 may be configured to maintain electrical

contact with the contacts 182, 183 of the thermal energy delivery probe 180 as the stylet 181 of the thermal energy delivery probe 180 is displaced relative to the second tubular conductor 140. In other words, electrical communication between the contacts 182, 183 of the thermal energy delivery probe 180 and the contacts 188, 189 may be maintained despite movement of the thermal energy delivery probe 180 relative to the housing 110. Electrical communication between the contacts 182, 183 and the contacts 188, 189 may create an electrical circuit for the delivery of thermal energy to tissue of the patient. The electrical contacts 182, 183 may be raised electrical contacts that are hard wired to the adaptor 184 (e.g., a LEMO style adaptor).

[0066] The thermal energy delivery probe 180 may be inserted through the port 123 to vary the position of one or more temperature sensors 158, 159 (e.g., thermocouples) that are attached to or otherwise coupled to the stylet 181 of the thermal energy delivery probe 180. In other words, in some embodiments, the thermal energy delivery probe 180 is displaceable with respect to the second tubular conductor 140, thereby enabling displacement of the one or more temperature sensors 158, 159 relative to the second tubular conductor 140. For example, in some embodiments, the thermal energy delivery probe 180 is inserted such that a temperature sensor 158 is aligned with a protrusion 174 of the on the outer sleeve 170. In some instances, indicia on the port 123 may help a practitioner to determine the position of a temperature sensor.

[0067] For example, in some embodiments, when the thermal energy delivery probe 180 is inserted into the port 123 and rotated such that the bottom edge of a hub 185 of the thermal energy delivery probe 180 is aligned with a first indicium 127, a temperature sensor 158 may be disposed a particular distance (D_1 of FIG. 20) (e.g., 5 mm) from a center of the exposed portion 132 of the tubular insulator 130. When the bottom edge of the hub 185 is aligned with the second indicium 128, the temperature sensor 158 may be disposed a different distance (D_2 of FIG. 20) (e.g., 10 mm) from a center of the exposed portion 132 of the tubular insulator 130. When the bottom edge of the hub 185 is aligned with the third indicium 129, the temperature sensor 158 may be disposed still another distance (D_3 of FIG. 20) (e.g., 15 mm) from a center of the exposed tubular insulator 130.

[0068] In some embodiments, when the bottom edge of the hub 185 (or some other portion of the thermal energy delivery probe 180) is aligned with an indicium

127, 128, 129 on the port 123, the temperature sensor 158 may be aligned with a protrusion 172, 173, 174 or intrusion (not shown) on the outer sleeve 170, thereby allowing the practitioner to determine the position of the temperature sensor by fluoroscopy. In some embodiments, a second temperature sensor 159 may be disposed proximal of a first temperature sensor 158. For example, a first temperature sensor 158 of the thermal energy delivery probe 180 may be disposed at or adjacent to the distal end of the stylet 181 while a second temperature sensor 159 is disposed proximal of the first temperature sensor 158.

[0069] In some embodiments, such as the embodiment depicted in FIG. 20A, instead of one or more protrusions on the outer sleeve 170', the medical device 100' may instead include one or more intrusions 172', 173', 174' or protrusions (not shown) adjacent the distal end of the first tubular conductor 120'. In other words, in some embodiments, one or more protrusions or intrusions 172', 173', 174' are disposed proximal of the insulator 130'. The intrusions 172', 173', 174' or protrusions may be visible by radiography. The medical device 100' may be configured such that a temperature sensor of the thermal energy delivery probe is aligned with an intrusion 172', 173', 174' or protrusion when the bottom edge of the hub (or some other portion of the thermal energy delivery probe) is aligned with an indicium (e.g., an indicium on the port). Aligning a temperature sensor with one of the intrusions 172', 173', 174' may be accomplished in a manner similar to that described above in connection with protrusions 173, 173, 174 on the outer sleeve 170. In some embodiments, protrusions and/or intrusions are disposed on both the outer sleeve and the first tubular conductor. Some embodiments may lack protrusions and/or intrusions on both the outer sleeve and the first tubular conduit.

[0070] Once the articulating distal portion 138 of the medical device 100 is properly positioned within the tissue of the vertebra and the one or more temperature sensors 158, 159 are properly positioned within the utility channel 146 of the medical device 100, the medical device 100 may be activated for ablation, thereby causing an electrical current to flow between the distal portion 144 of the second tubular conductor 140 and the first tubular conductor 120 via tissue within the vertebra of the patient. For example, an adaptor 184 of the thermal energy delivery probe 180 may be connected to a power supply (e.g., a radiofrequency generator). An actuator that is in electrical communication with the power supply and/or the thermal energy delivery probe may then be actuated, thereby creating a radiofrequency current that

flows through a circuit that includes the thermal energy delivery device 180, the electrical contacts 182, 183, the electrical contacts 188, 189, the wires 117, 118, the first tubular conductor 120, the second tubular conductor 140, and the tissue of the patient. The radiofrequency current may flow from the radiofrequency generator, through the electrical contacts 183, 189, through the wire 118 down the second tubular conductor 140, arching across the exposed portion 132 of the insulator 130 through tissue of the patient to the first tubular conductor 120, through the wire 117, across the contacts 188, 182, and back to the generator. In this manner, radiofrequency energy may be provided between the first tubular conductor 120 and the second tubular conductor 140 via tissue of the patient. Due to the oscillation of the current at radio frequencies, the tissue through which the electrical current travels and/or tissue within the near-field region may be heated. Stated differently, due to the electrical current flowing between the electrodes, ionic agitation occurs, thereby creating friction which heats up nearby tissue. Once the tissue has reached a sufficient temperature (e.g., approximately 50 °C, such as between 45 °C and 55 °C) as measured by one or more temperature sensors, such as the temperature sensors 158, 159 on the stylet 181 of the thermal energy delivery probe 180, the medical device 100 may be deactivated, thereby preventing the unintended heating of healthy tissue. Stated differently, one or more thermocouples may be used to actively monitor temperature within the desired ablation region. When radiofrequency energy from the thermal energy delivery device 180 causes the tissue to reach a predetermined (e.g., ablation) temperature, the medical device 100 may be deactivated, thereby restricting ablation to the desired region. In this manner, predictable, measurable, and/or uniform ablation zones may be created in cancerous tissue. In other words, once temperature measurements from the one or more temperature sensors have been obtained, the practitioner may, based on the input from the one or more temperature sensors, (1) alter the location of the distal end 101 of the medical device 100, (2) change the flow rate of electrical current, and/or (3) change the voltage across the electrodes.

[0071] If desired, multiple rounds of ablation may be carried out in a single procedure. For example, after a portion of the tissue within a tumor has been ablated using the technique described above, the articulating distal portion 138 of the medical device 100 may be repositioned to a new location within the tumor. Once positioned in this new location, the medical device 100 may be activated to kill tissue

in a second region of the tumor. This process may be completed as many times as is necessary to ensure that the entire tumor is adequately treated. Once there is no need or desire for further ablation, the thermal energy delivery probe 180 may be retracted and removed from the port 123 of the medical device 100.

[0072] Once the tissue from the tumor has been treated by radiofrequency energy, a bone cement may be delivered to a cavity within the vertebra of the patient, thereby providing stabilization to the vertebra. For example, in some embodiments, the medical device 100 includes a cement delivery cartridge 190 (see FIGS. 22–25) that is configured to facilitate delivery of a bone cement through the utility channel 146 of the medical device 100 and out of a distal opening at the distal end 101 of the second tubular conductor 140. The cement delivery cartridge 190 may include a stylet 191, an elongate tubular distal portion 192, an inflexible hollow portion 193, a proximal adaptor 194 (e.g., a luer connection), and a latch 195.

[0073] To deliver bone cement to the vertebra of the patient, the distal end of the cement delivery cartridge 190 may be inserted into the port 123 of the medical device 100 as shown in FIG. 23. As the cement delivery cartridge 190 is inserted into the port 123, the stylet 191 of the cement delivery cartridge 190 may be disposed within a channel of the cement delivery cartridge. The stylet 191 may confer increased rigidity to the tubular distal portion 192 of the cement delivery cartridge 190 during insertion into the utility channel 146 of the medical device 100.

[0074] In some embodiments, the tubular distal portion 192 of the cement delivery device 190 can be inserted into the utility channel 146 of the medical device 100 only one way due to the geometry of the cement delivery cartridge 190 and the port 123. In some embodiments, the tubular distal portion 192 is flexible, thereby allowing the tubular distal portion 192 to adopt a non-linear path.

[0075] As the cement delivery cartridge 190 is inserted into the port 123, a latch 195 on the side of the cement delivery cartridge 190 may slide across a discontinuity 125 in the threads 124 and become seated within a recess 126 in the port 123. In this manner, the latch 195 may lock the cement delivery cartridge 190 to the port 123 without rotation of the cement delivery cartridge 190 relative to the port 123. Once the cement delivery cartridge 190 is locked to the port 123, the stylet 191 may be removed (see FIG. 24).

[0076] Once the stylet 191 has been removed (see FIG. 25), the cement delivery cartridge 190 may be coupled to a pump (not shown) that is configured to pump

bone cement into a cavity in the vertebra of a patient. For example, the pump may deliver bone cement to the proximal adaptor 194 of the cement delivery cartridge 190 and then advance the bone cement through the cement delivery cartridge 190 into the vertebra of the patient.

[0077] In some embodiments, the bone cement comprises methyl methacrylate. In some embodiments, the bone cement is an ultra-high viscosity bone cement with an extended working time. The bone cement, once hardened, may stabilize the vertebra of the patient.

[0078] Once the cement has been delivered to the patient, the cement delivery cartridge 190 may be uncoupled from the port 123 of the medical device 100 by pressing the latch 195 toward the adaptor 194 and pulling the cement delivery cartridge 190 out of both the utility channel 146 and the port 123.

[0079] Articulation or bending of the distal portion 138 of the medical device 100 may be utilized to position the distal portion 138 of the medical device 100 for delivery of cement via the cement delivery cartridge 190, positioning of the elongate cutting instrument 175 when taking a biopsy, and/or for targeting the area to which thermal energy is delivered and the thermal energy delivery probe 180 is coupled to the medical device 100.

[0080] Devices, assemblies and methods within the scope of this disclosure may deviate somewhat from the particular devices and methods discussed above in connection with the medical device 100. For example, in some embodiments, no biopsy sample is obtained during the medical procedure. Stated differently, in some embodiments, no elongate cutting instrument is employed during the medical procedure. In some embodiments, no cement is delivered through a utility channel of a medical device that is also used for ablation. In other words, in some embodiments, cement delivery involves the use of a separate medical device. For example, in some embodiments, one or both of the second tubular conductor and the outer sleeve have sealed distal ends that do not allow for the delivery of cement through the medical device.

[0081] FIGS. 26 and 27 depict an embodiment of a medical device 200 that resembles the medical device 100 described above in certain respects. Accordingly, like features are designated with like reference numerals, with the leading digits incremented to “2.” For example, the embodiment depicted in FIGS. 26–27 includes a handle 202 that may, in some respects, resemble the handle 102 of FIGS. 1–25.

Relevant disclosure set forth above regarding similarly identified features thus may not be repeated hereafter. Moreover, specific features of the medical device 100 and related components shown in FIGS. 1–25 may not be shown or identified by a reference numeral in the drawings or specifically discussed in the written description that follows. However, such features may clearly be the same, or substantially the same, as features depicted in other embodiments and/or described with respect to such embodiments. Accordingly, the relevant descriptions of such features apply equally to the features of the medical device 200 and related components depicted in FIGS. 26 and 27. Any suitable combination of the features, and variations of the same, described with respect to the medical device 100 and related components illustrated in FIGS. 1–25 can be employed with the medical device 200 and related components of FIGS. 26 and 27, and vice versa.

[0082] FIG. 26 provides a perspective view of the medical device 200, while FIG. 27 provides a cross-sectional side view of the medical device 200. Like the medical device 100 described above, the medical device 200 is configured to facilitate tumor ablation, but is not designed for the delivery of bone cement to the patient. In other words, in embodiments that use the medical device 200, bone cement is generally delivered using a separate medical device.

[0083] More particularly, the medical device 200 includes a side adaptor 219 that is integrated with the housing 210. The adaptor 219 is configured to couple to a power supply that delivers radiofrequency energy to heat and/or kill tissue within the patient.

[0084] The medical device 200 further includes a slidable tab 297 that is configured to facilitate placement of one or more temperature sensors 258, 259 within a utility channel 246 of the medical device 200. More particularly, the slidable tab 297 may be coupled to a rod 298 that is coupled to a stylet 281. By sliding the slidable tab 297 in a proximal direction, the stylet 281 may be retracted. Conversely, by sliding the slidable tab 297 in a distal direction, the stylet 281 may be advanced. In this manner, the position of temperature sensors 258, 259 that are attached to the stylet 281 may be controlled. For example, in some embodiments, the housing 210 includes one of more indicia that help a practitioner determine the location of one or more temperature sensors. For example, when the slidable tab 297 is aligned with a first indicium on the housing 210, a temperature sensor 258 on the stylet 281 may be aligned with a first protrusion 272 on the outer sleeve. When the slidable tab 297 is

aligned with a second indicium on the housing 210, the temperature sensor 158 may be aligned with a second protrusion 273 on the outer sleeve. Other indicia may indicate alignment of a temperature sensor 258 with one or more other features or elements of the medical device 200.

[0085] Any methods disclosed herein include one or more steps or actions for performing the described method. The method steps and/or actions may be interchanged with one another. In other words, unless a specific order of steps or actions is required for proper operation of the embodiment, the order and/or use of specific steps and/or actions may be modified. Moreover, sub-routines or only a portion of a method described herein may be a separate method within the scope of this disclosure. Stated otherwise, some methods may include only a portion of the steps described in a more detailed method.

[0086] Reference throughout this specification to "an embodiment" or "the embodiment" means that a particular feature, structure, or characteristic described in connection with that embodiment is included in at least one embodiment. Thus, the quoted phrases, or variations thereof, as recited throughout this specification are not necessarily all referring to the same embodiment.

[0087] Similarly, it should be appreciated by one of skill in the art with the benefit of this disclosure that in the above description of embodiments, various features are sometimes grouped together in a single embodiment, figure, or description thereof for the purpose of streamlining the disclosure. This method of disclosure, however, is not to be interpreted as reflecting an intention that any claim requires more features than those expressly recited in that claim. Rather, as the following claims reflect, inventive aspects lie in a combination of fewer than all features of any single foregoing disclosed embodiment. Thus, the claims following this Detailed Description are hereby expressly incorporated into this Detailed Description, with each claim standing on its own as a separate embodiment. This disclosure includes all permutations of the independent claims with their dependent claims.

[0088] Recitation in the claims of the term "first" with respect to a feature or element does not necessarily imply the existence of a second or additional such feature or element. It will be apparent to those having skill in the art that changes may be made to the details of the above-described embodiments without departing from the underlying principles of the present disclosure.

CLAIMS

1. A medical device for spinal tumor ablation, the medical device comprising:

a first tubular conductor;

a tubular insulator extending through the first tubular conductor such that a proximal end of the tubular insulator is proximal of the first tubular conductor and a distal end of the tubular insulator is distal of the first tubular conductor;

a second tubular conductor extending through the tubular insulator such that a distal portion of the second tubular conductor is disposed distal of the insulator, wherein at least a portion of the second tubular conductor is fixedly disposed relative to the first tubular conductor; and

an articulating distal portion of the medical device that is configured to transition from a linear configuration to a non-linear configuration;

wherein the medical device is configured such that, when the medical device is activated for ablation within a vertebra of a patient, an electrical current flows between the distal portion of the second tubular conductor and the first tubular conductor via tissue within the vertebra of the patient.

2. The medical device of claim 1, wherein a distal end of the first tubular conductor and the distal portion of the second tubular conductor are longitudinally offset by an exposed portion of the tubular insulator.

3. The medical device of claim 2, wherein the exposed portion of the tubular insulator has a length of between 0.3 cm and 1.0 cm.

4. The medical device of any one of claims 1–3, wherein the articulating distal portion of the medical device is configured to mechanically displace tissue within the vertebra of the patient.

5. The medical device of any one of claims 1–4, further comprising a pointed distal end that is configured to penetrate bone within the vertebra of the patient.

6. The medical device of any one of claims 1–5, wherein the articulating distal portion of the medical device is configured to transition from the linear configuration to the non-linear configuration in only a single plane.

7. The medical device of any one of claims 1–6, further comprising a handle, wherein manipulation of the handle causes displacement of the articulating distal portion.

8. The medical device of any one of claims 1–7, further comprising an elongate shaft that is at least partially disposed within a channel of the second tubular conductor, wherein a distal end of the elongate shaft is attached to the second tubular conductor adjacent a distal end of the second tubular conductor such that displacement of the elongate shaft relative to a proximal end of the second tubular conductor causes displacement of the articulating distal portion of the medical device.

9. The medical device of any one of claims 1–8, further comprising a side port that is in fluid communication with a utility channel of the second tubular conductor.

10. The medical device of any one of claims 1–9, wherein the second tubular conductor comprises a sealed distal end.

11. The medical device of any one of claims 1–10, further comprising an outer sleeve that is attached to the distal portion of the second tubular conductor, wherein a majority of the outer sleeve has an outer diameter that is substantially identical to the outer diameter of the first tubular conductor.

12. The medical device of claim 11, wherein the outer sleeve comprises one or more protrusions or intrusions to facilitate fluoroscopic visualization.

13. A medical device for ablation within a vertebra of a patient, the medical device comprising:

a first tubular conductor;

a tubular insulator at least partially disposed within the first tubular conductor;

a second tubular conductor at least partially disposed within the tubular insulator;

an elongate shaft that is coupled to the second tubular conductor such that manipulation of the elongate shaft causes articulation of a distal portion of the medical device;

a thermal energy delivery probe that is configured to be at least partially disposed within a channel of the second tubular conductor, wherein the thermal energy delivery probe comprises an stylet; and

one or more temperature sensors coupled to and disposed along the stylet of the thermal energy delivery probe;

wherein the thermal energy delivery probe is displaceable with respect to the second tubular conductor, thereby enabling displacement of the one or more temperature sensors relative to second tubular conductor; and

wherein the medical device is configured such that, when the medical device is activated for ablation within a vertebra of a patient, an electrical current flows between a distal portion of the second tubular conductor and the first tubular conductor via tissue within the vertebra of the patient.

14. The medical device of claim 13, further comprising a side port, wherein the thermal energy delivery probe is selectively coupleable to the side port.

15. The medical device of claim 14, wherein the side port includes indicia for determining the position of the one or more temperature sensors.

16. The medical device of any one of claims 14–15, wherein the thermal energy delivery probe comprises threads that are configured to engage with threads on the side port, wherein rotation of the thermal energy delivery probe relative to the side port causes thread-based displacement of the thermal energy delivery probe relative to the second tubular conductor.

17. The medical device of any one of claims 13–16, further comprising a handle and an articulating distal portion, wherein manipulation of the handle causes displacement of the elongate shaft and displacement of the articulating distal portion.

18. The medical device of any one of claims 13–17, further comprising one or more radiopaque protrusions adjacent the distal end of the medical device.

19. The medical device of any one of claims 13–18, further comprising one or more intrusions adjacent the distal end of the medical device.

20. The medical device of any one of claims 13–19, further comprising one or more electrical contacts that are configured to maintain electrical contact with the thermal energy delivery probe as the stylet of the thermal energy delivery probe is displaced relative to the second elongate conductor.

21. The medical device of claim 20, wherein the electrical contacts comprise leaf spring contacts.

22. The medical device of any one of claims 13–21, wherein the thermal energy delivery probe is configured to deliver radiofrequency energy.

23. A method of treating a vertebral body of a patient, the method comprising:

obtaining a spinal tumor ablation device, the spinal tumor ablation device comprising:

a first electrode; and

a second electrode;

wherein the first electrode and at least a portion of the second electrode are fixedly offset relative to one another;

advancing the distal tip of the spinal tumor ablation device into the vertebral body; and

activating the spinal tumor ablation device such that an electrical current flows between the first electrode and the second electrode via tissue within the vertebral body of the patient.

24. The method of claim 23, further comprising inserting a thermal energy delivery probe into a channel of the spinal tumor ablation device prior to activating the spinal tumor ablation device.

25. The method of any one of claims 23–24, further comprising rotating the thermal energy delivery probe relative to a side port of the spinal tumor ablation device, thereby positioning one or more temperature sensors that are attached to a stylet of the thermal energy delivery probe.

26. The method of claim 25, further comprising:

obtaining temperature measurements from the one or more temperature sensors; and

one or more of:

altering the location of the distal tip of the spinal tumor ablation device based on input from the one or more temperature sensors;

changing the flow rate of the electrical current based on input from the one or more temperature sensors; and

changing the voltage across the electrodes based on input from the one or more temperature sensors.

27. The method of any one of claims 23–26, further comprising articulating a distal portion of the spinal tumor ablation device such that the distal portion transitions from a linear configuration to a non-linear configuration.

28. A medical device for spinal tumor ablation, the medical device comprising:

a first tubular conductor;

a tubular insulator extending through the first tubular conductor;

a second tubular conductor extending through the tubular insulator such that a distal portion of the second tubular conductor is disposed distal of the insulator, wherein the second tubular conductor forms a utility channel that extends from a proximal opening of the second tubular conductor to a distal opening at the distal end of the second tubular conductor; and

a port disposed proximal of the second tubular conduit, wherein the port is configured to provide access to the proximal opening of the utility channel.

29. The medical device of claim 28, wherein the medical device is configured such that, when the medical device is activated for ablation within a vertebra of a patient, an electrical current flows between the distal portion of the second tubular conductor and the first tubular conductor via tissue within the vertebra of the patient.

30. The medical device of any one of claims 28–29, further comprising an articulating distal portion that is configured to transition from a linear configuration to a non-linear configuration.

31. The medical device of any one of claims 28–30, further comprising a thermal energy delivery probe that is configured to be at least partially disposed within the utility channel when the thermal energy delivery probe is fully inserted into the port.

32. The medical device of claim 31, wherein the thermal energy delivery probe is configured to contact one or more electrical contacts of the medical device, thereby creating a circuit for the delivery of thermal energy to tissue of the patient.

33. The medical device of claim 31, wherein:

the thermal energy delivery probe further comprises a stylet; and

one or more temperature sensors are attached to the stylet.

34. The medical device of claim 33, wherein the port includes indicia for determining the position of the one or more temperature sensors.

35. The medical device of claim 31, wherein the thermal energy delivery probe is selectively coupleable to the port.

36. The medical device of claim 34, wherein the thermal energy delivery probe comprises threads that are configured to engage with threads on the port, wherein rotation of the thermal energy delivery probe relative to the port causes

thread-based displacement of the thermal energy delivery probe relative to the second tubular conduit.

37. The medical device of claim 28, further comprising an elongate cutting instrument for obtaining a biopsy sample, wherein the elongate cutting instrument, when fully inserted into the port, extends through the distal opening at the distal end of the utility channel.

38. The medical device of claim 28, further comprising a cement delivery cartridge, wherein the cement delivery cartridge is configured to facilitate delivery of a cement through the utility channel and out of the distal opening at the distal end of the second tubular conductor.

39. The medical device of claim 28, further comprising a thermal energy delivery probe and a cement delivery cartridge, wherein the medical device is configured to permit sequential insertion of a thermal energy delivery probe into the port, removal of the thermal energy delivery probe from the port, and then insertion of the cement delivery cartridge across the port.

40. A method of treating a spinal tumor, the method comprising:

obtaining an ablation device, the ablation device comprising:

a first electrode; and

a second electrode;

activating the ablation device such that an electrical current flows between the first electrode and the second electrode via spinal tissue of a patient; and

delivering bone cement through a utility channel of the ablation device, thereby filling an opening within a vertebra of the patient.

41. The method of claim 40, further comprising articulating a distal portion of the ablation device, thereby mechanically displacing tissue within the vertebra of the patient.

42. The method of claim 40, further comprising inserting a distal end of the medical device into the vertebra of the patient, wherein the medical device has sufficient strength to prevent buckling of the medical device as the distal end of the medical device is inserted within the vertebra of the patient.

43. The method of claim 40, wherein neither the first electrode nor the second electrode is coupled to a spring.

44. The method of claim 40, further comprising inserting a thermal energy delivery probe into the utility channel of the ablation device prior to activating the ablation device.

45. The method of claim 40, further comprising rotating a thermal energy delivery probe relative to a side port of the ablation device, thereby adjusting the position of one or more temperature sensors that are attached to a stylet of the thermal energy delivery probe.

46. The method of claim 45, further comprising:

obtaining temperature measurements from the one or more temperature sensors; and

one or more of:

altering the location of the distal tip of the spinal tumor ablation device based on input from the one or more temperature sensors;

changing the flow rate of the electrical current based on input from the one or more temperature sensors; and

changing the voltage across the electrodes based on input from the one or more temperature sensors.

47. The method of claim 40, further comprising displacing an elongate cutting instrument through the utility channel and into tissue of the patient, thereby obtaining a biopsy sample.

48. The method of claim 47, wherein the bone cement comprises methyl methacrylate.

49. The medical device of claim 43, wherein the electrical current is a radiofrequency current.

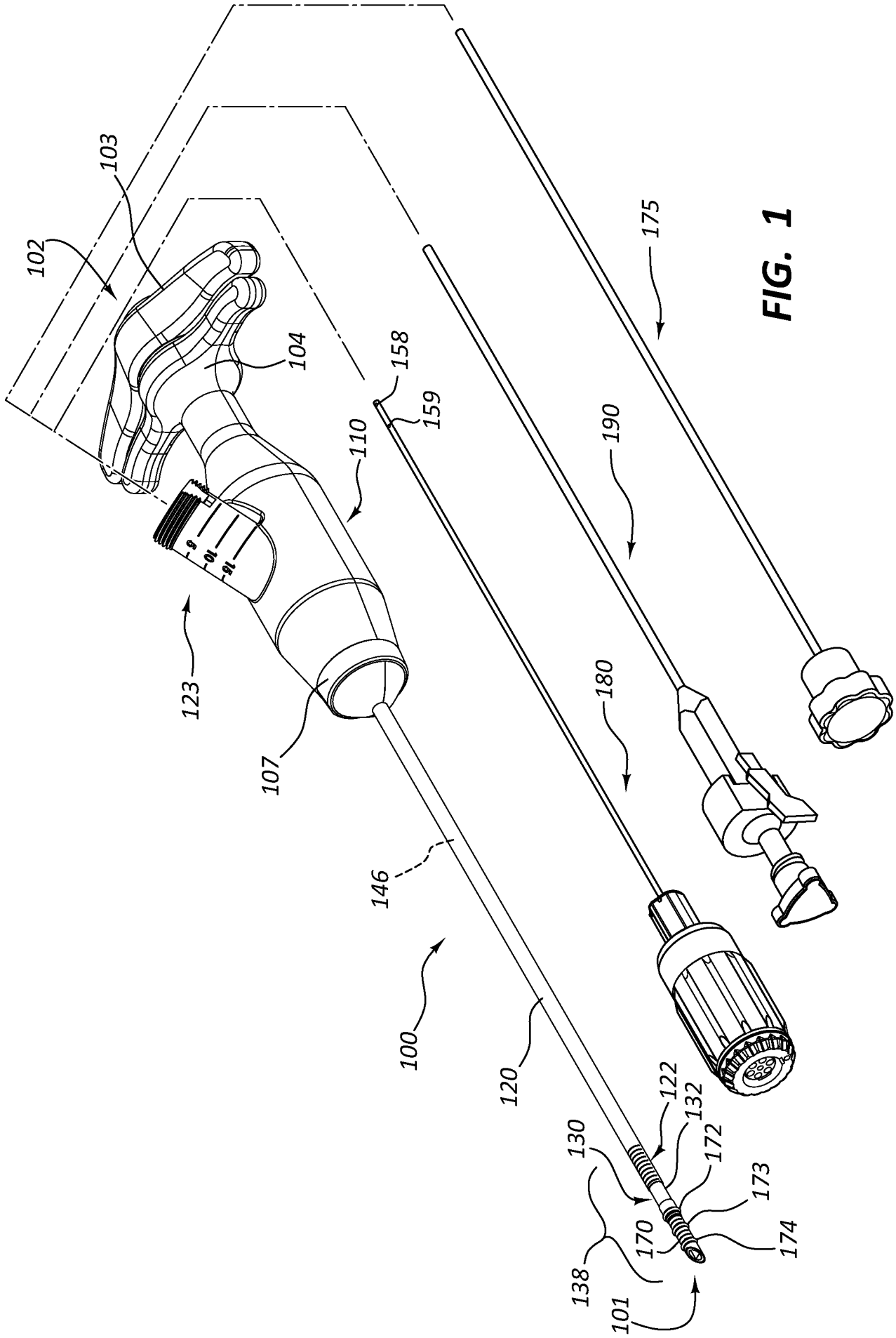
102
103
104
158
159
110
175
190
180
123
107
146
100
120
122
132
130
172
173
170
174
138
101

FIG. 1

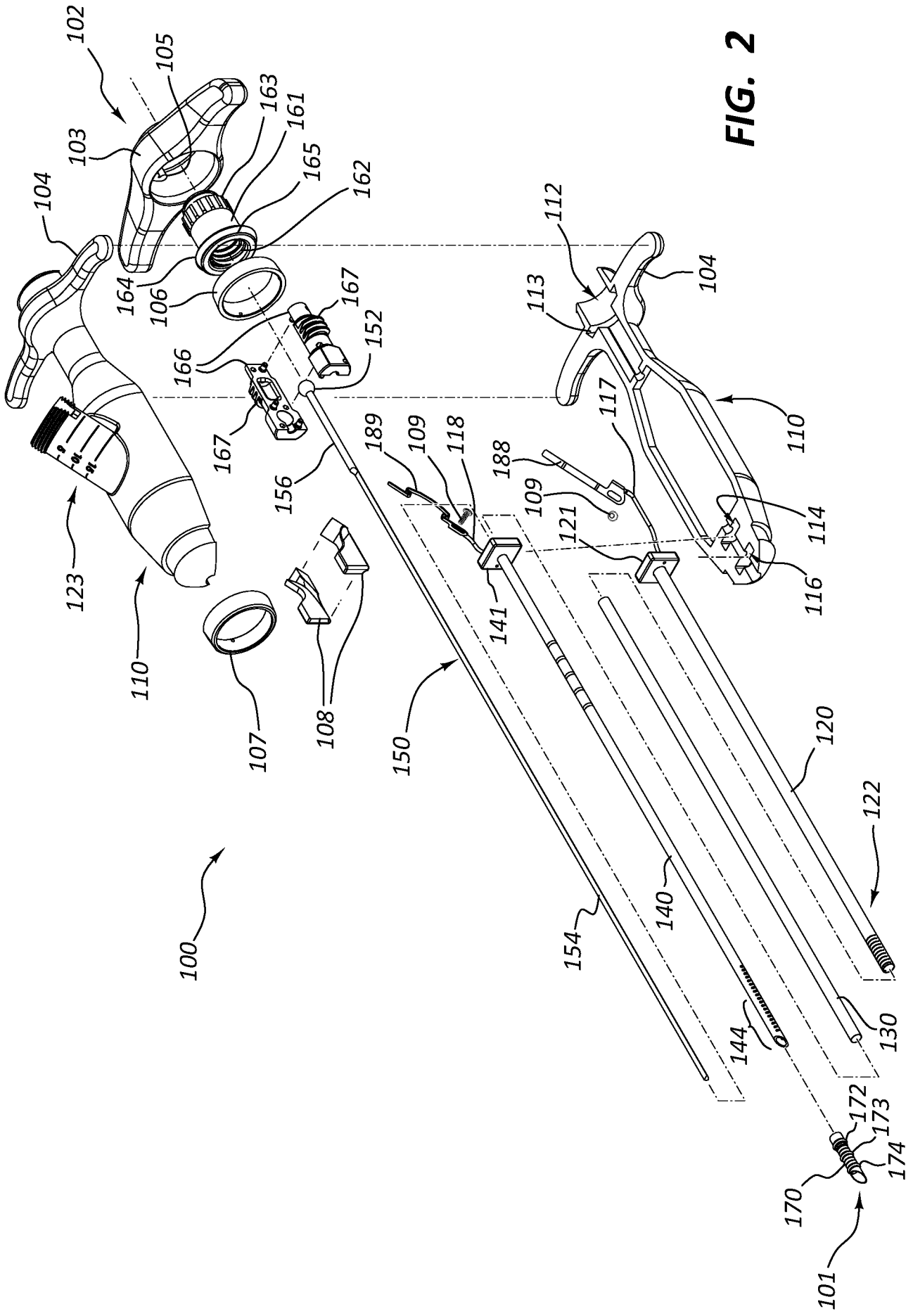
102
105
103
104
163
161
165
162
164
106
167
166
152
167
156
123
110
107
108
189
109
118
188
109
121
141
150
112
113
104
117
110
114
116
120
122
140
154
100
144
130
172
173
174
170
101

FIG. 2

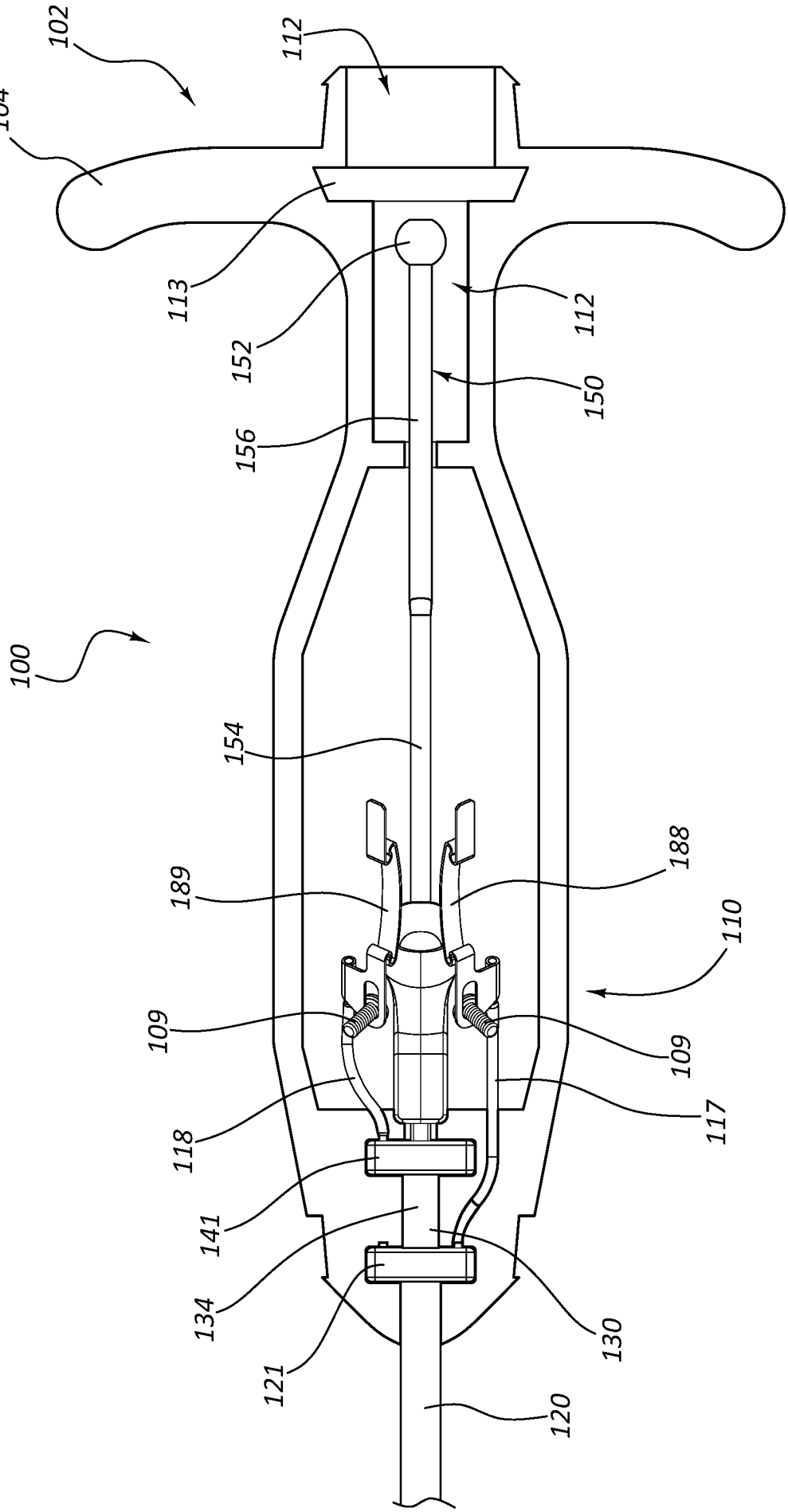
102
112
104
113
152
112
150
156
100
154
188
189
110
109
109
117
118
141
134
130
121
120

FIG. 3

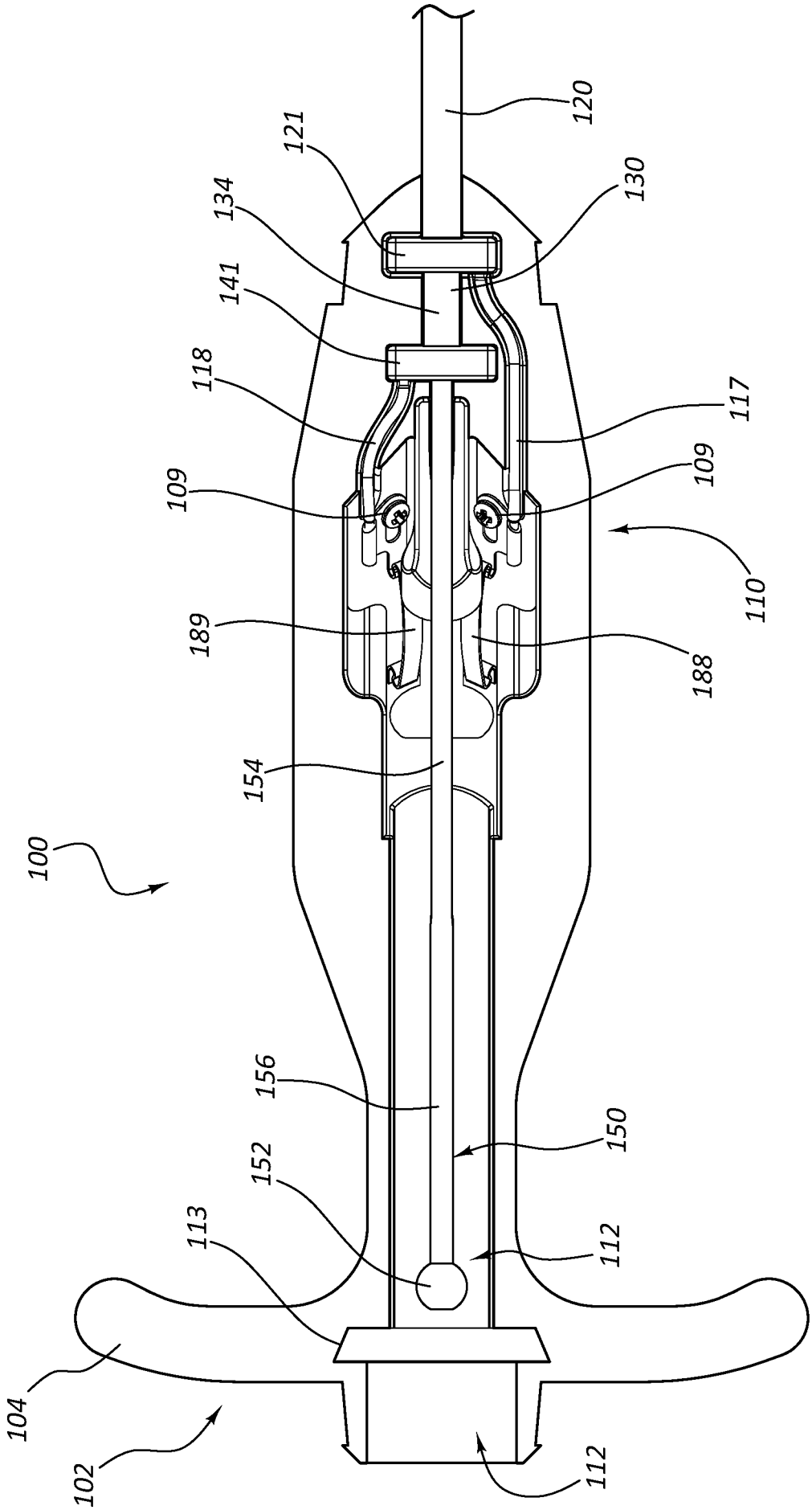
120
121
130
134
141
118
117
109
109
110
189
188
154
100
156
150
152
113
112
104
102
112

FIG. 4

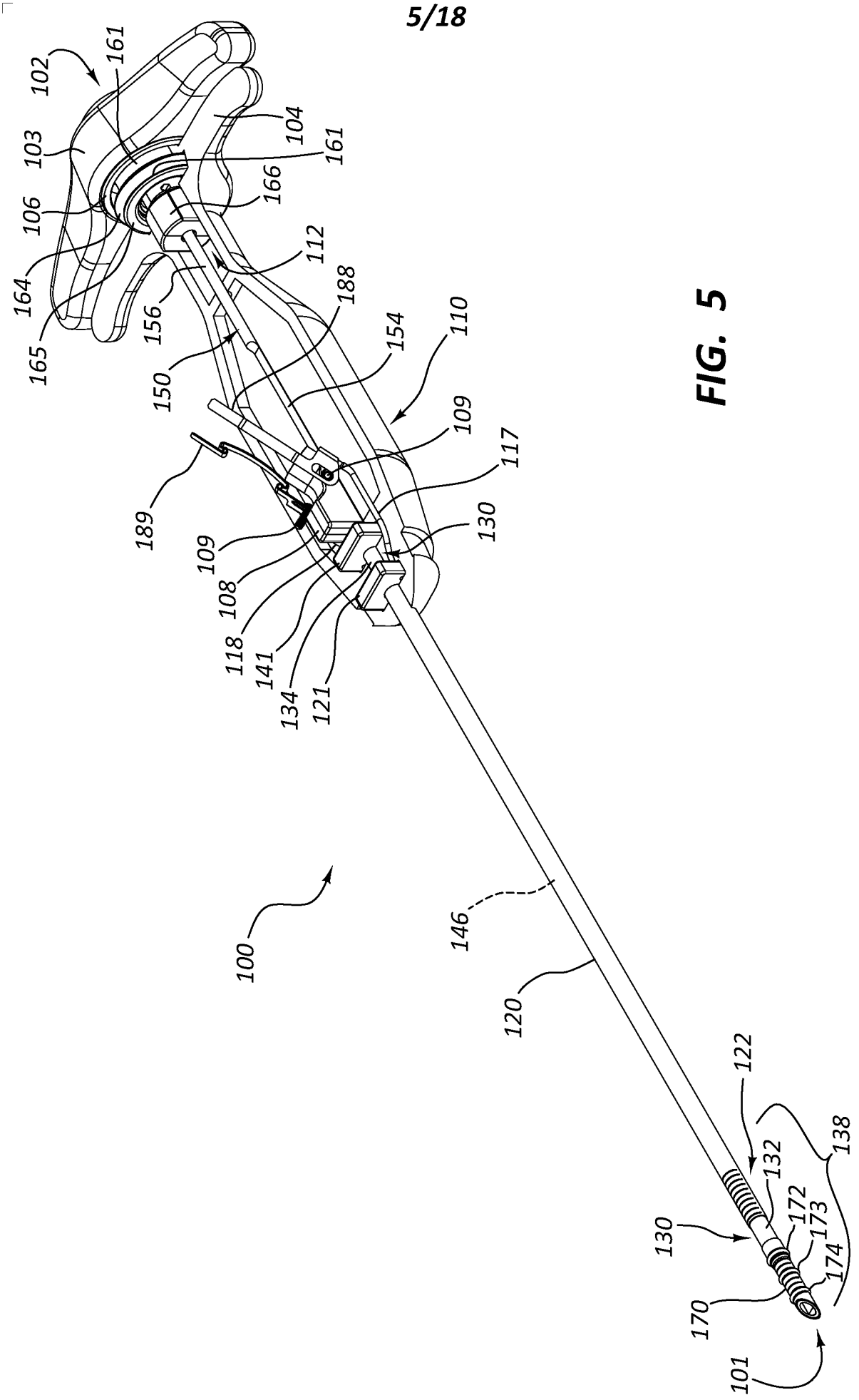
102
161
103
104
161
106
166
164
112
188
156
165
150
154
110
109
117
189
130
109
108
118
141
134
121
100
146
120
122
132
138
130
172
173
174
170
101

FIG. 5

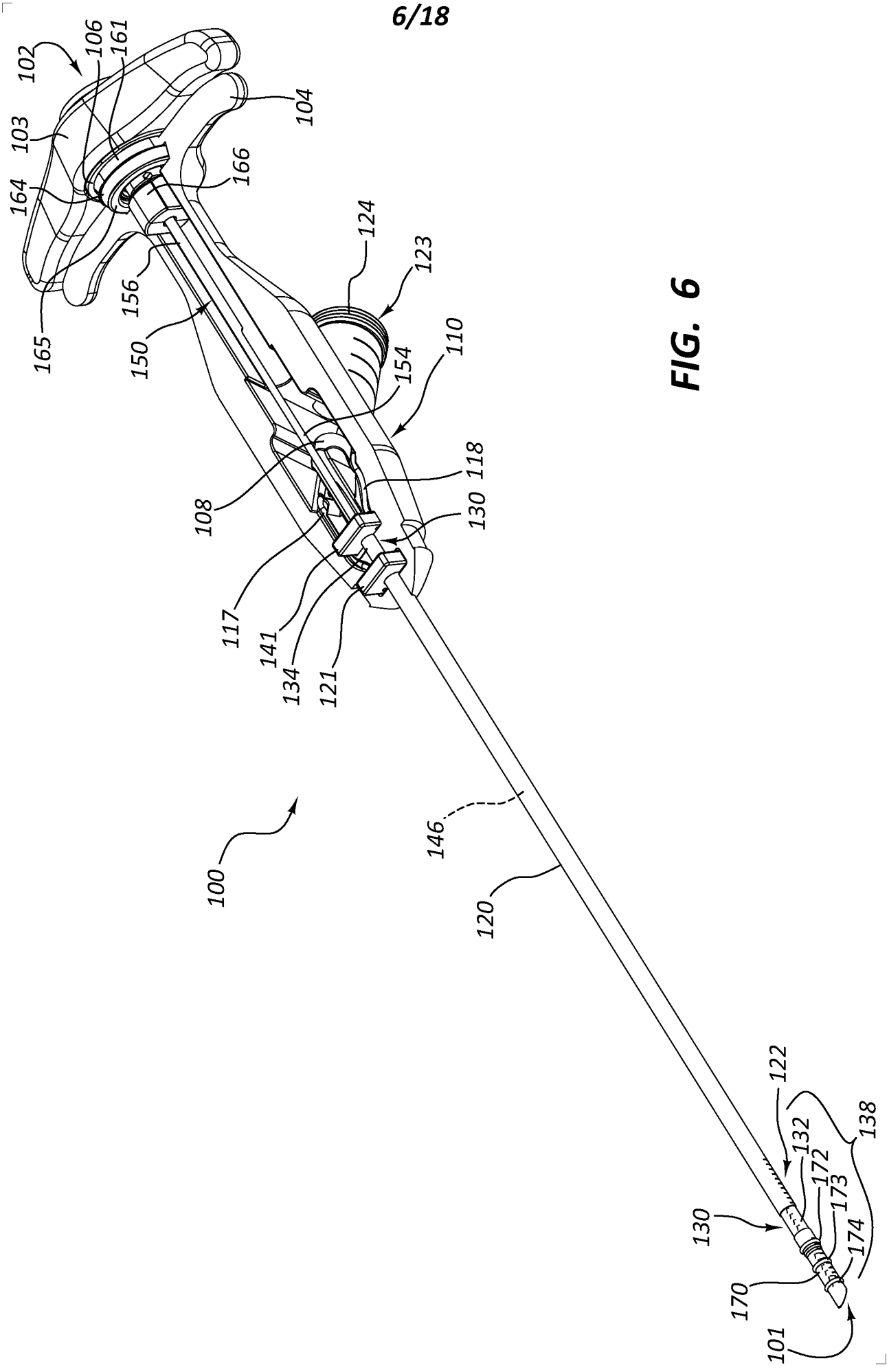
102
106
161
104
103
166
164
124
123
156
165
150
154
110
108
118
130
117
141
134
121
100
146
120
122
132
138
172
173
130
174
170
101

FIG. 6

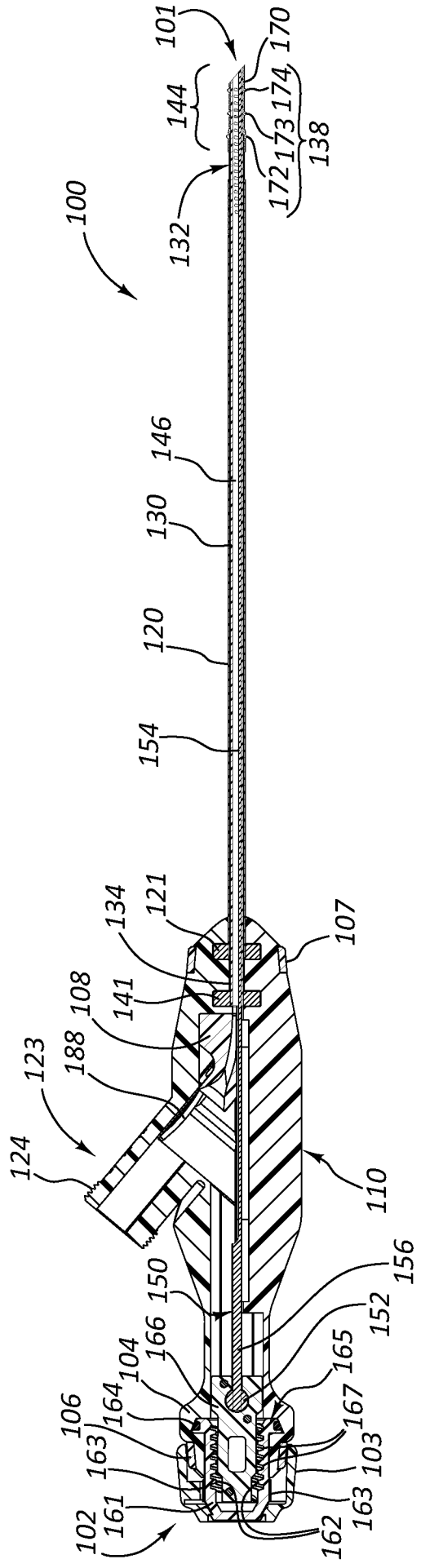
100
101
102
103
104
106
107
108
110
120
121
123
124
130
132
134
138
141
144
146
150
152
154
156
161
162
163
164
165
166
167
170
172
173
174
188

FIG. 7

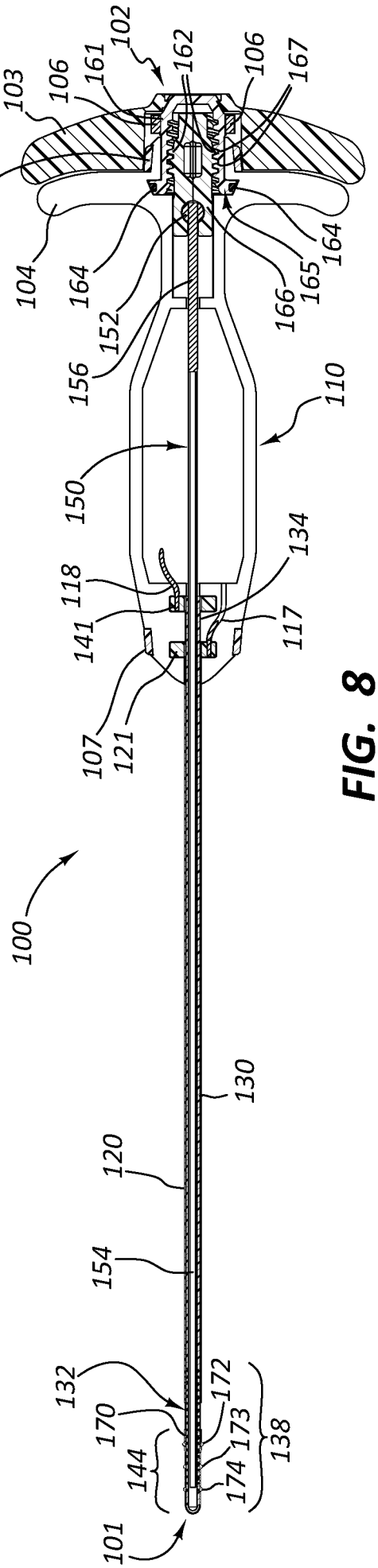
100
101
102
103
104
106
107
110
117
118
120
121
130
132
134
138
141
144
150
152
154
156
161
162
164
165
166
167
170
172
173
174

FIG. 8

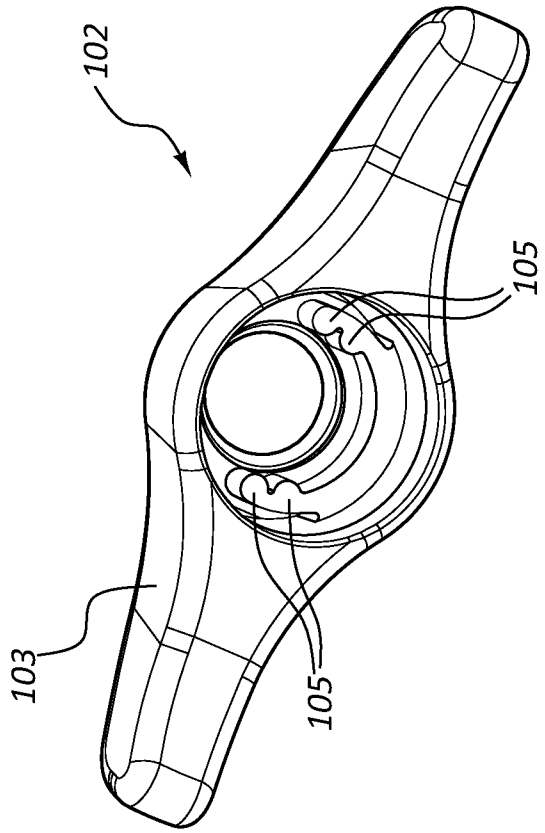

FIG. 10

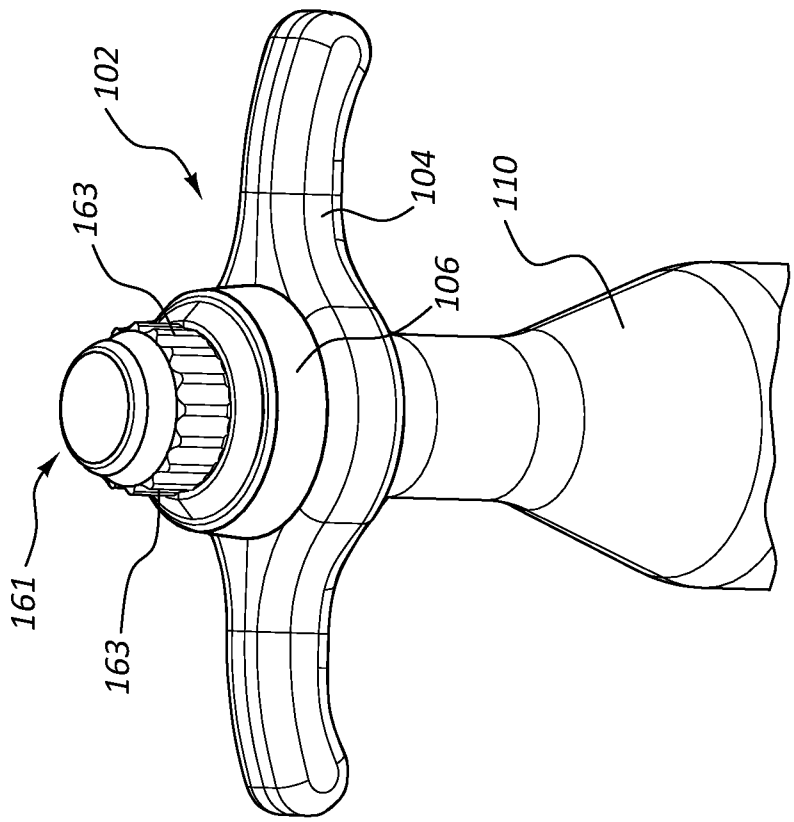

FIG. 9

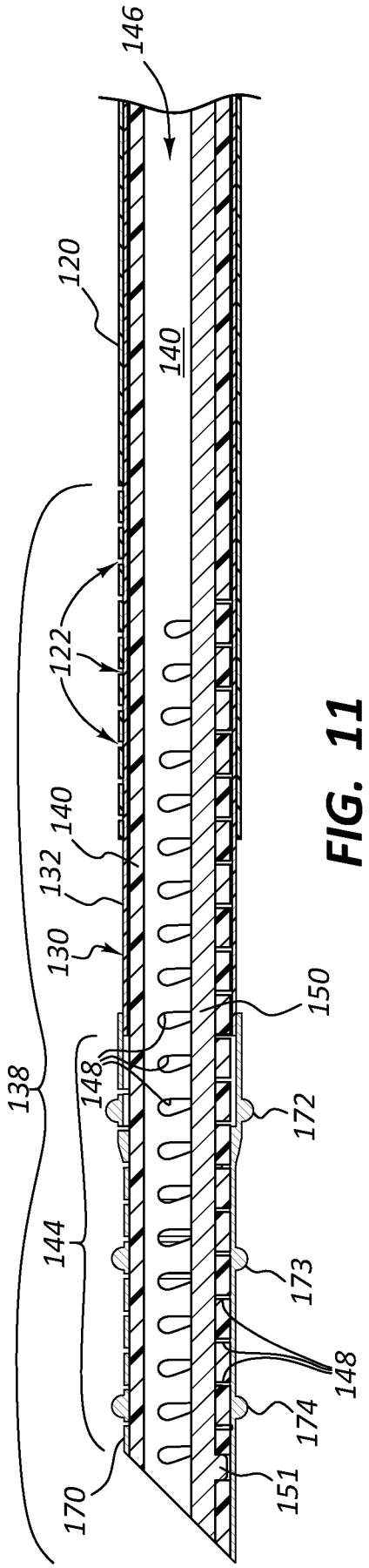
146
120
140
122
140
132
130
150
138
148
172
144
173
148
174
170
151

FIG. 11

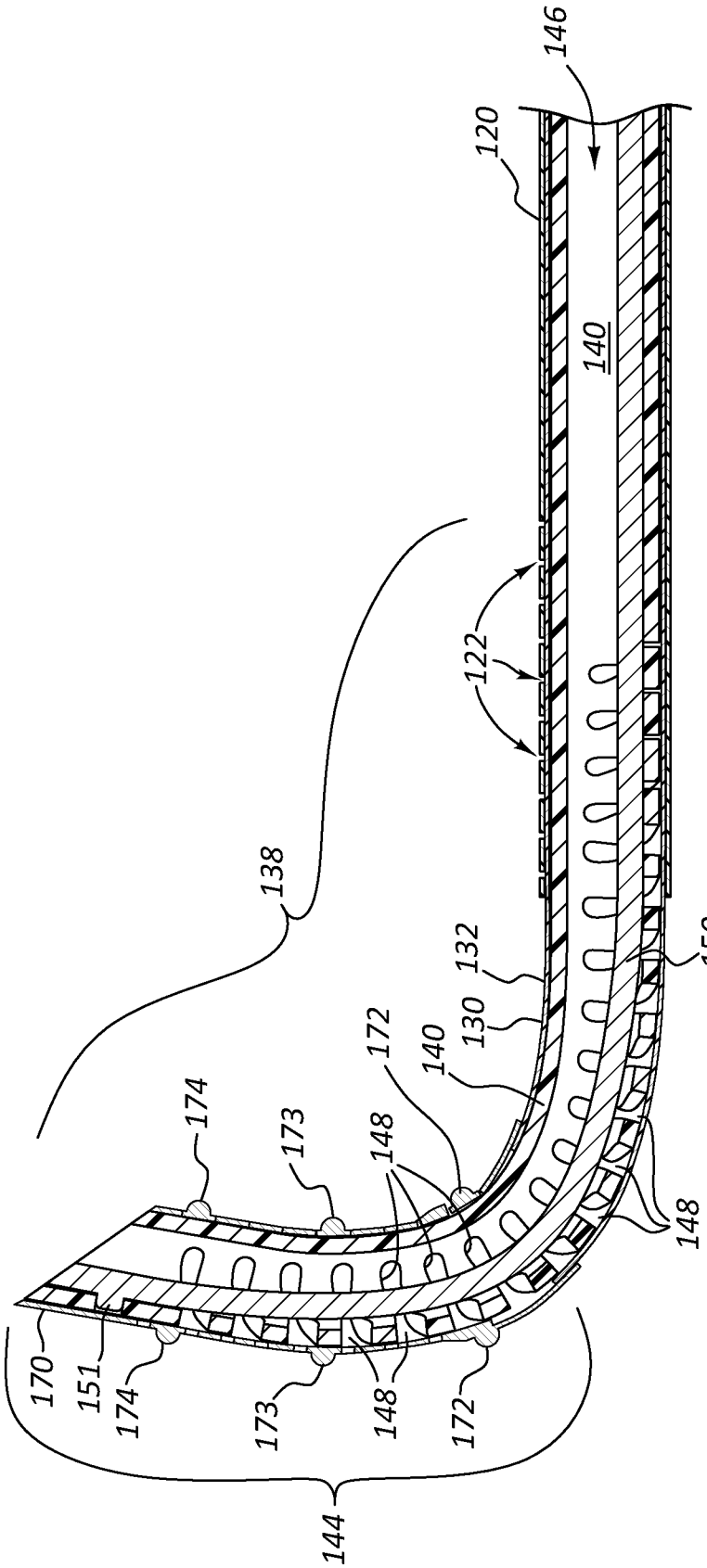
146
120
140
122
138
132
150
130
140
172
174
148
173
148
170
151
174
173
148
172
144

FIG. 12

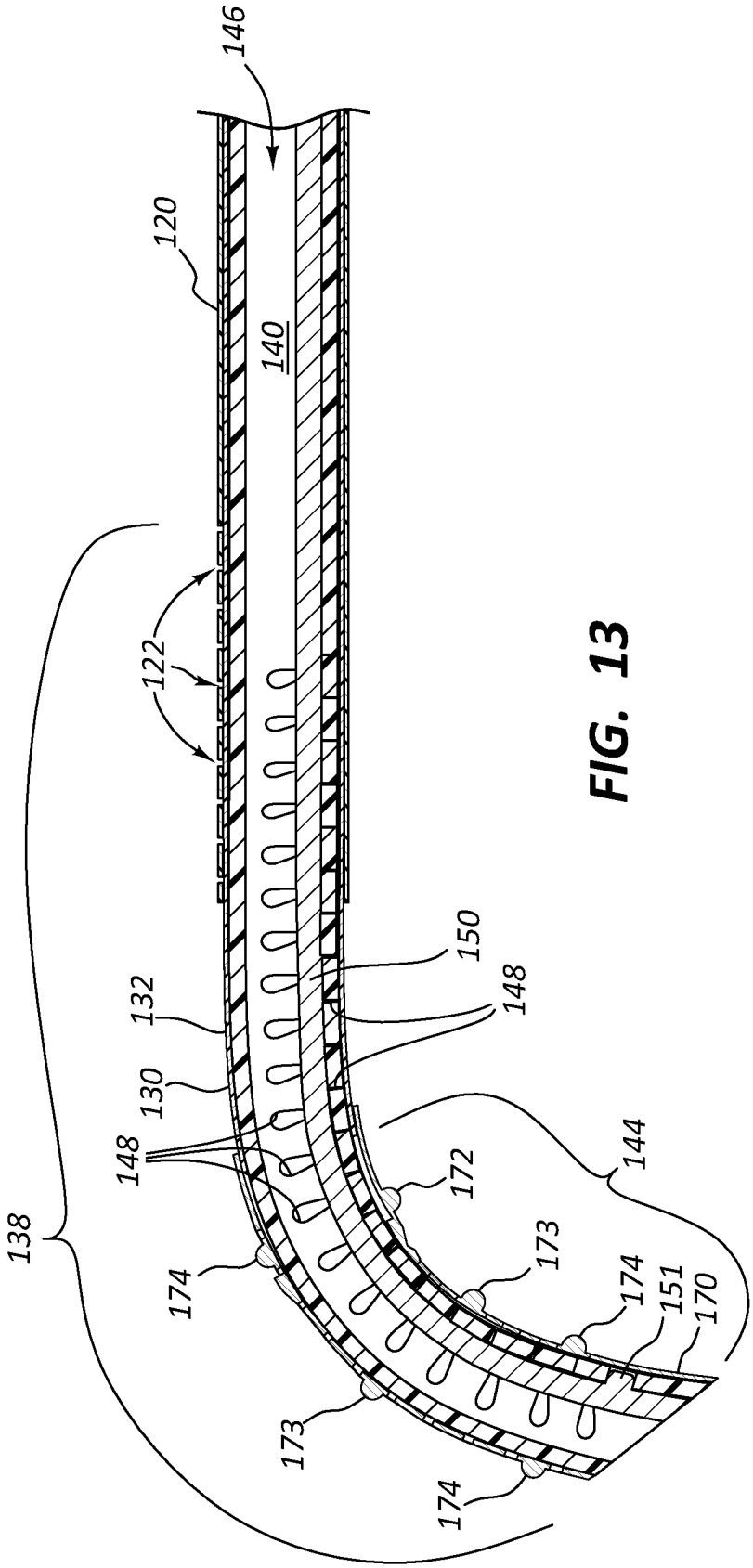
146
120
140
122
150
148
132
130
148
144
172
138
174
173
174
151
170
173
174

FIG. 13

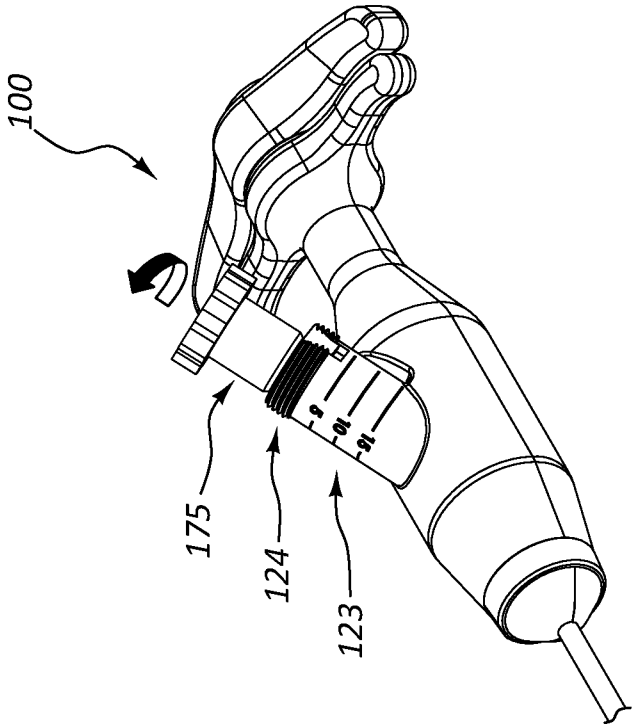

FIG. 15

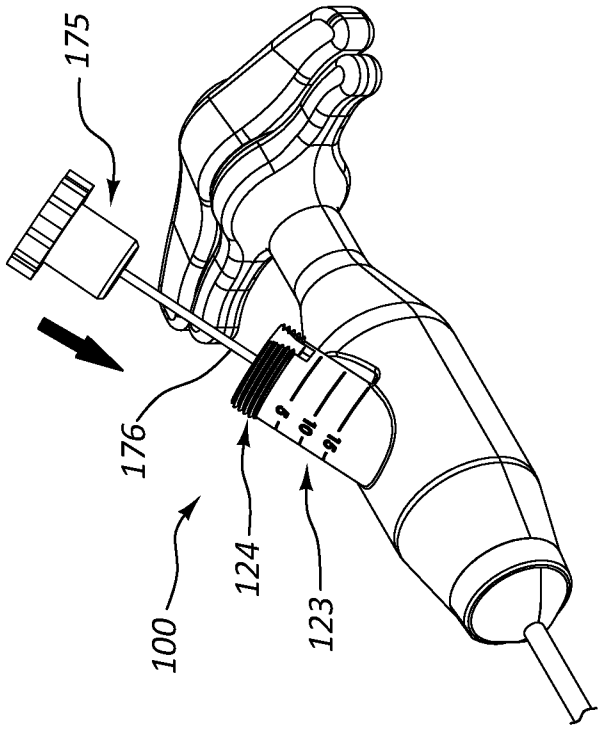

FIG. 14

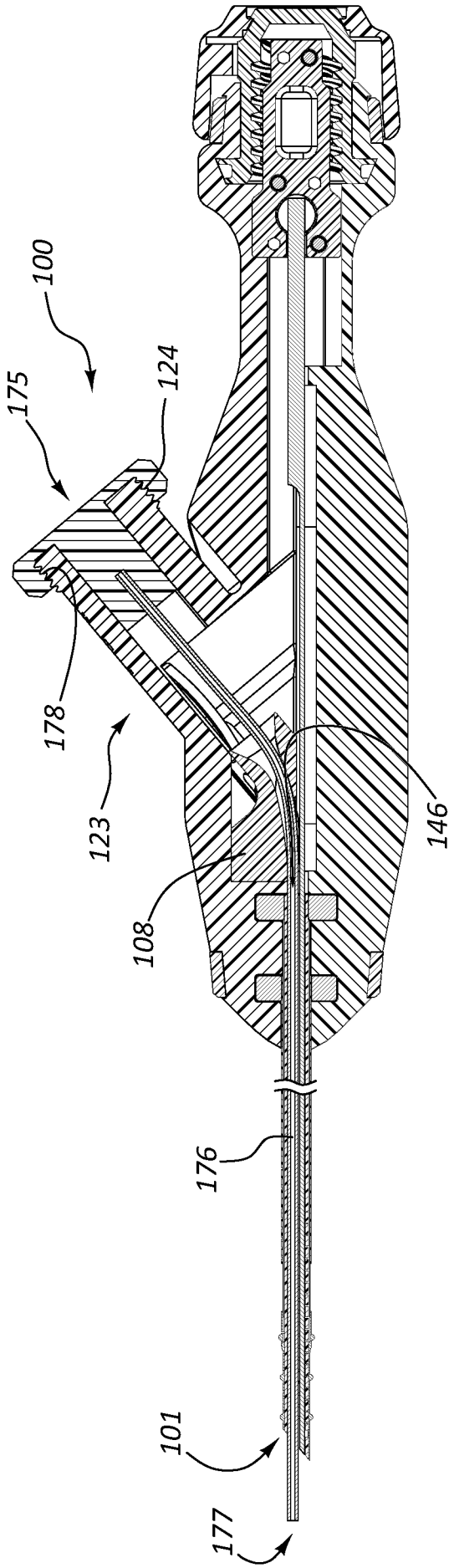

FIG. 16

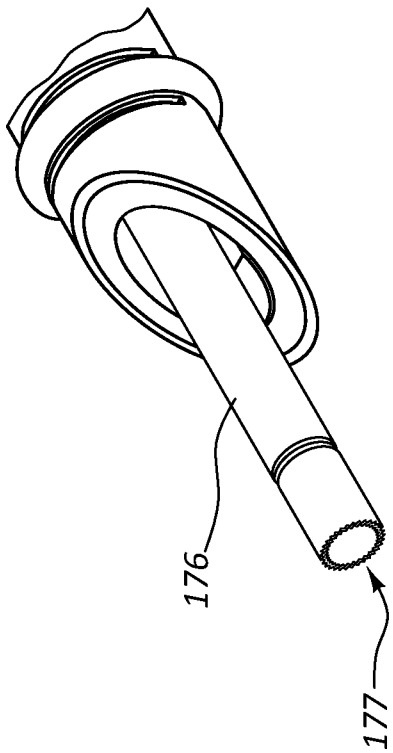

FIG. 17

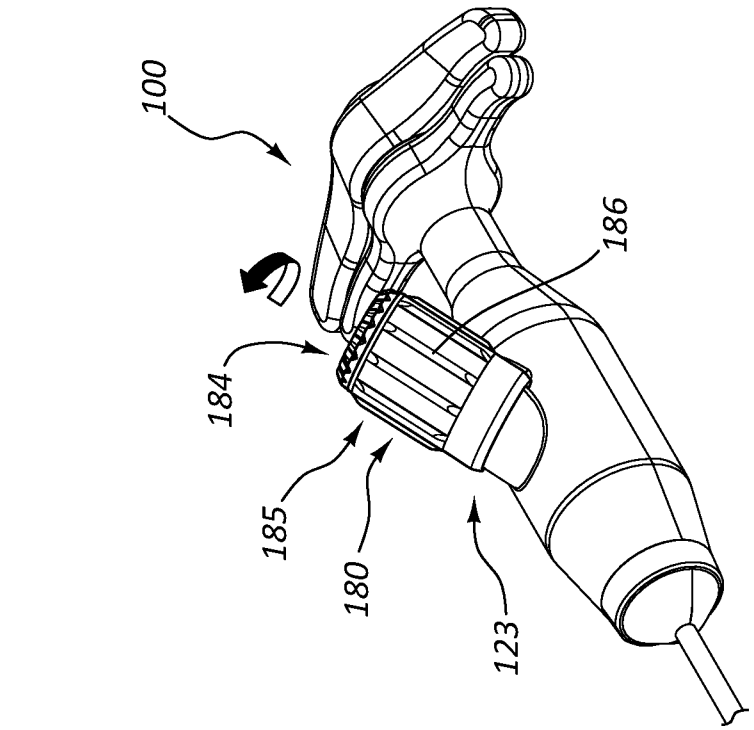
100
186
184
185
180
123

FIG. 19

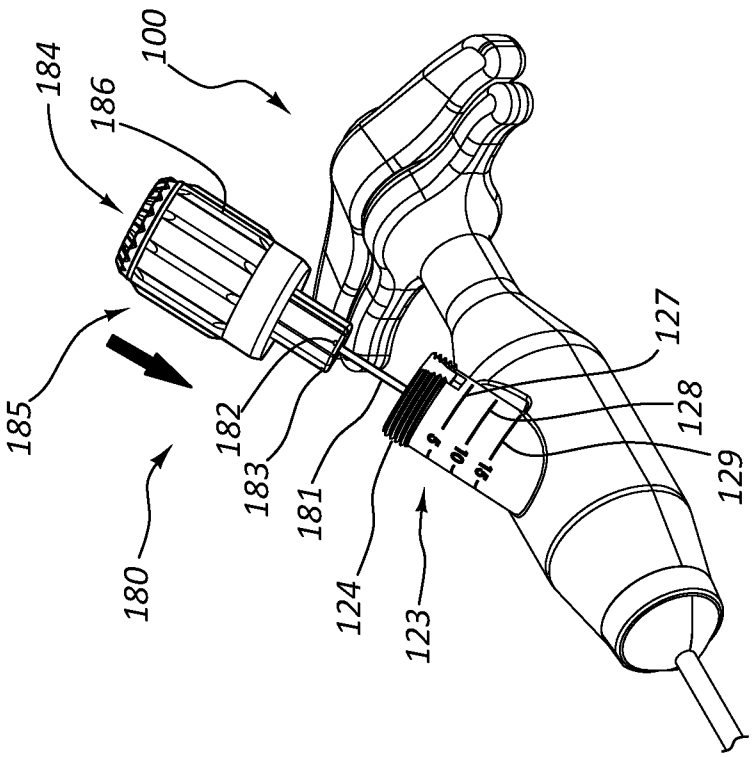
184
186
100
185
180
182
183
181
124
123
127
128
129

FIG. 18

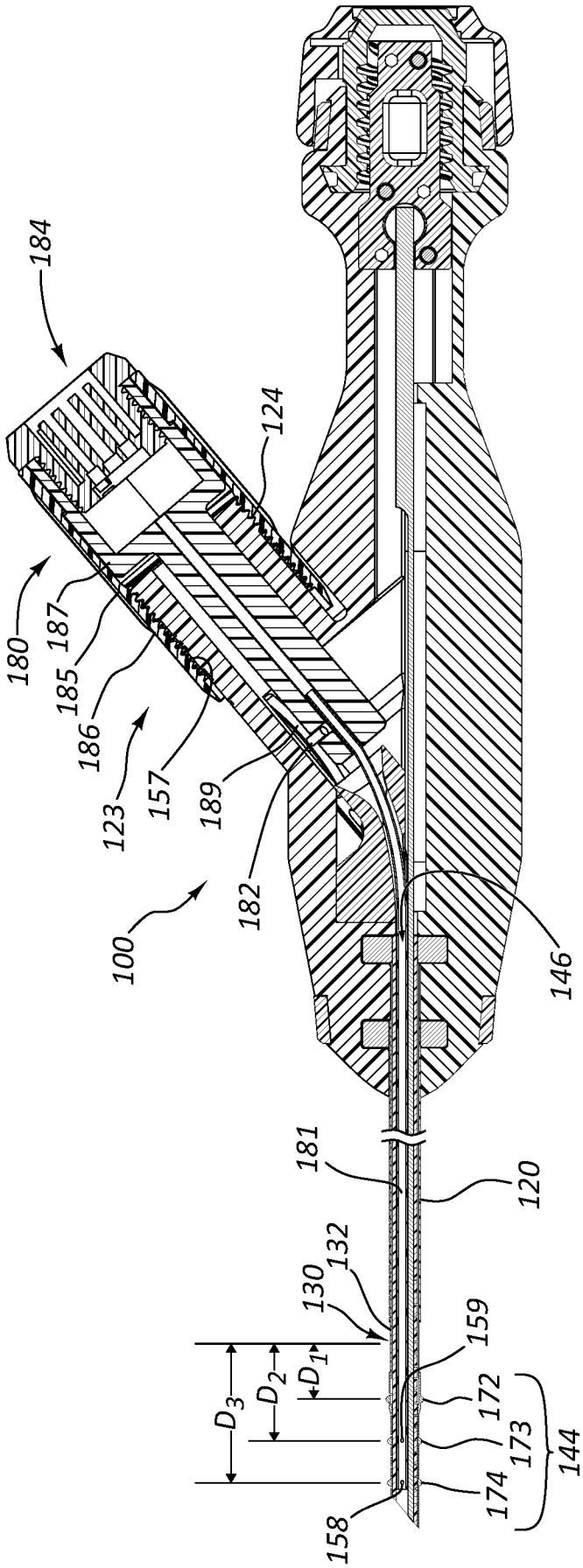

FIG. 20

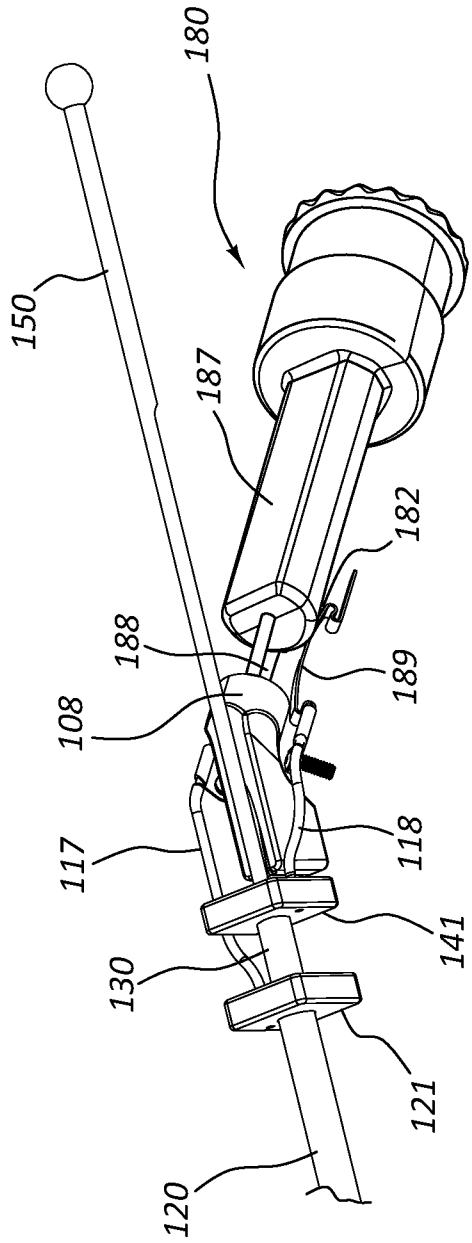

FIG. 21

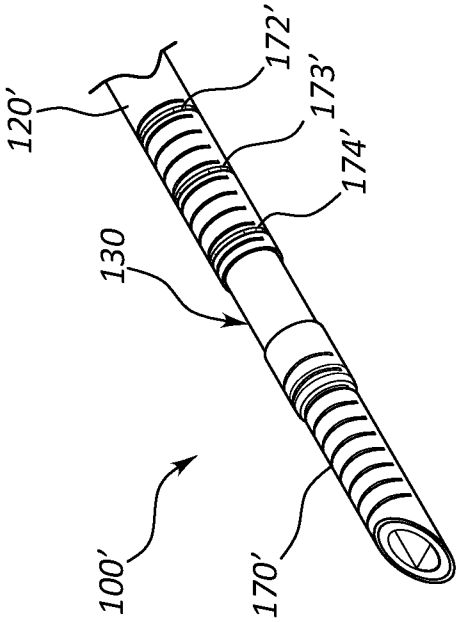

FIG. 20A

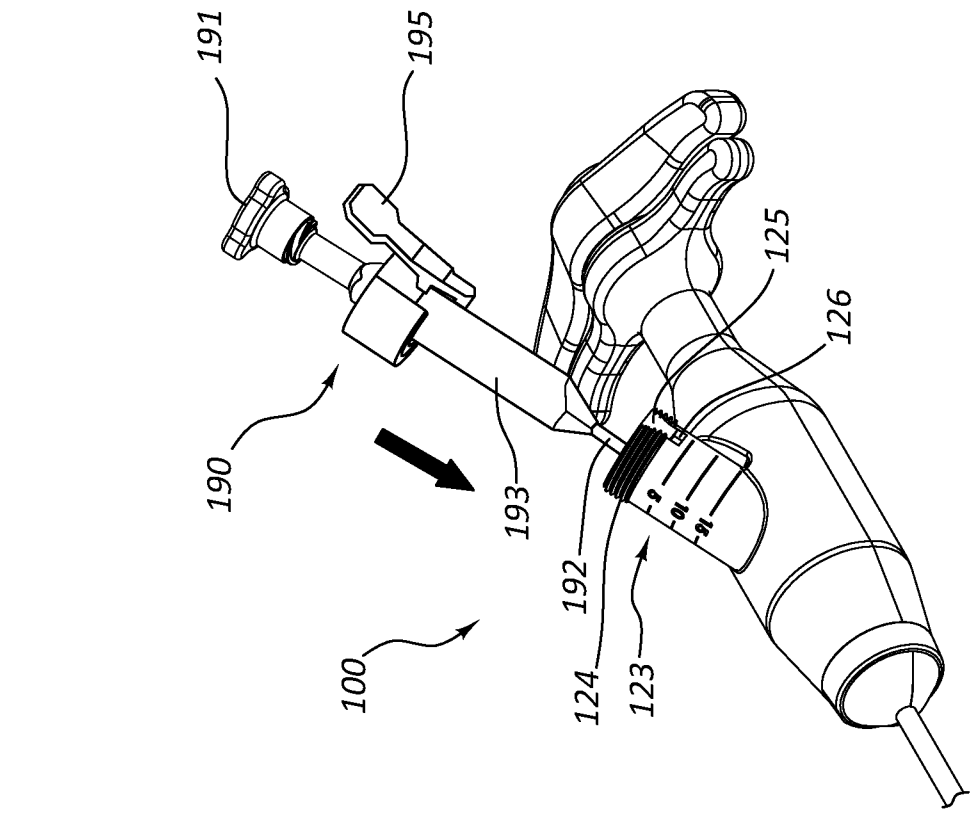

FIG. 23

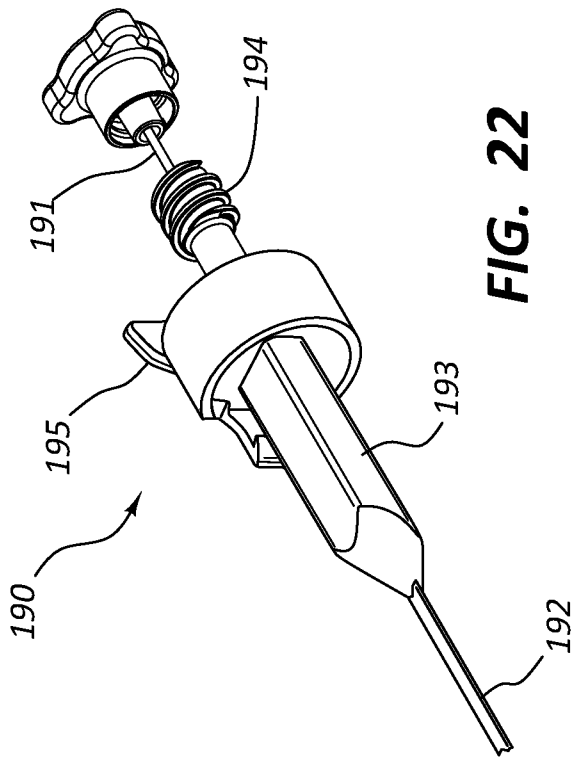

FIG. 22

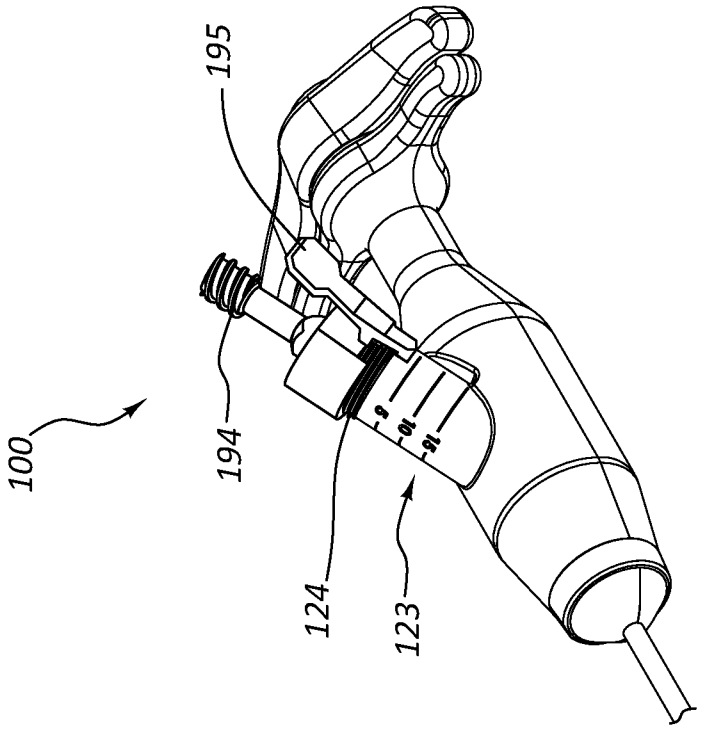

FIG. 25

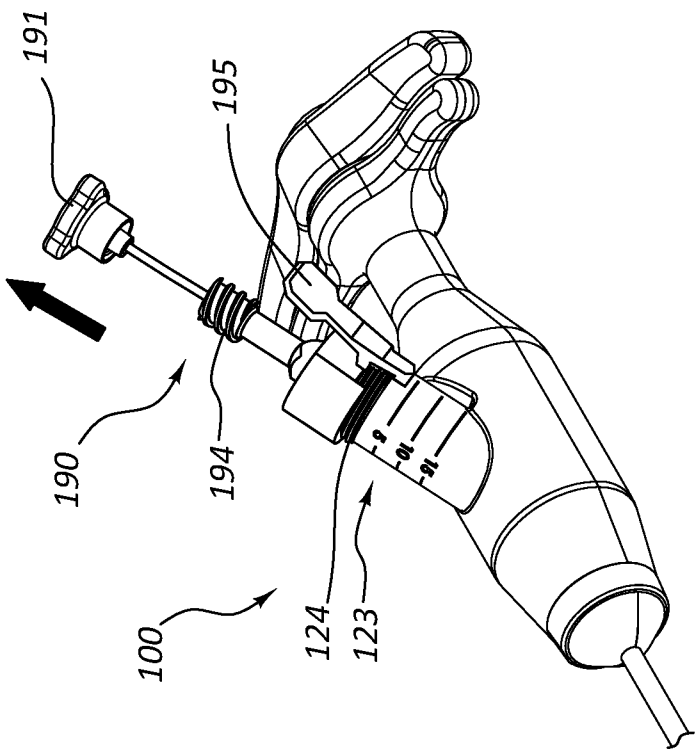

FIG. 24

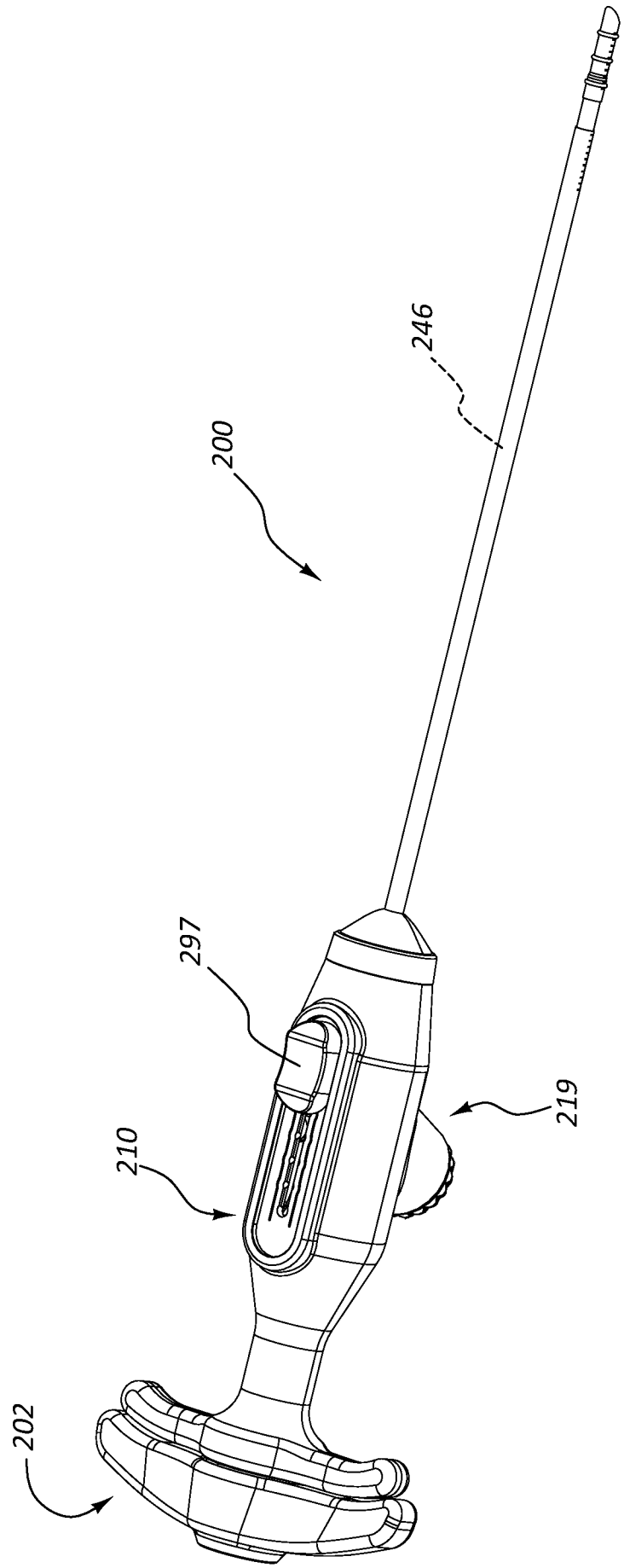

FIG. 26

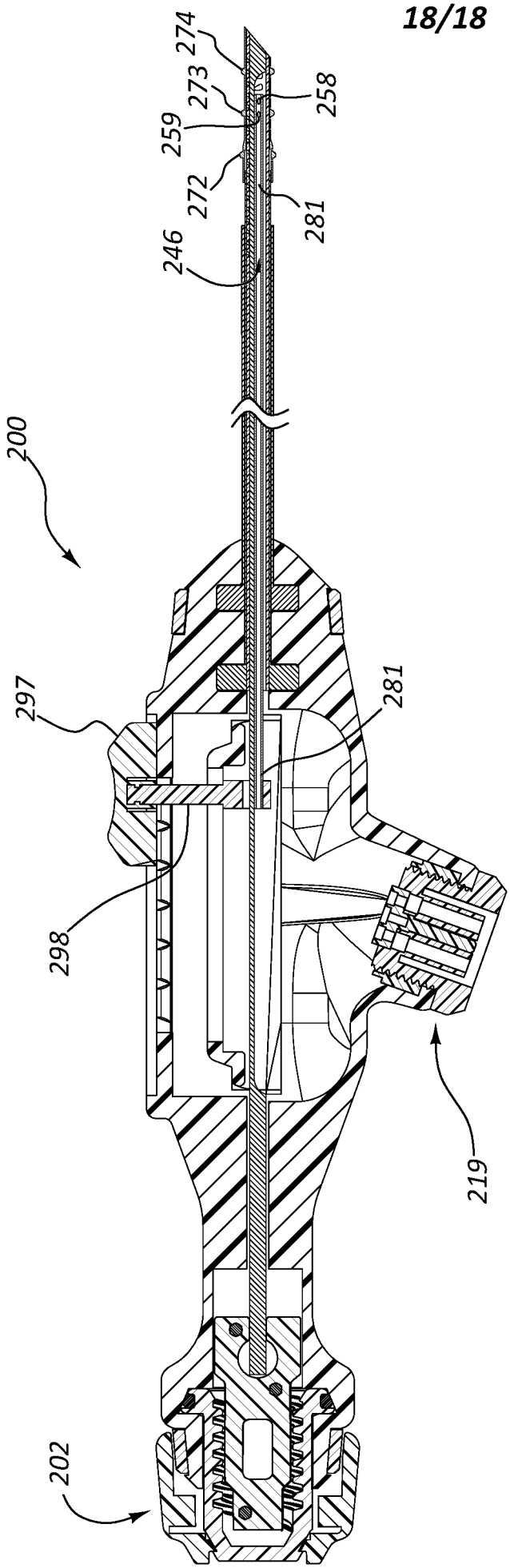

FIG. 27

INTERNATIONAL SEARCH REPORT

International application No.
PCT/US2017/063281

A. CLASSIFICATION OF SUBJECT MATTER

A61B 18/14(2006.01)i, A61B 10/02(2006.01)i, A61B 18/00(2006.01)i

According to International Patent Classification (IPC) or to both national classification and IPC

B. FIELDS SEARCHED

Minimum documentation searched (classification system followed by classification symbols)
A61B 18/14; A61B 18/18; A61B 10/02; A61B 18/00

Documentation searched other than minimum documentation to the extent that such documents are included in the fields searched
Korean utility models and applications for utility models
Japanese utility models and applications for utility models

Electronic data base consulted during the international search (name of data base and, where practicable, search terms used)
eKOMPASS(KIPO internal) & Keywords: spinal tumor ablation, ablation device, tubular conductor, tubular insulator, articulating portion, temperature sensor, thermal energy delivery probe

C. DOCUMENTS CONSIDERED TO BE RELEVANT

Category*	Citation of document, with indication, where appropriate, of the relevant passages	Relevant to claim No.
Y	US 2015-0216594 A1 (COVIDIEN LP) 06 August 2015 See paragraphs [0024], [0028], [0030], [0038]; claim 20; and figures 1, 5.	1-4,13-16,28-30,37-39
Y	US 6575969 B1 (RITTMAN, III, WILLIAM J. et al.) 10 June 2003 See abstract; and columns 4, 7-8, 16, 33.	1-4,13-16,29,39
Y	WO 2010-135602 A1 (OSSEON THERAPEUTICS, INC.) 25 November 2010 See paragraphs [0004], [0013], [0051], [0076], [0087], [0102], [0172]; claims 1, 15; and figure 14.	14-16,28-30,37-39
A	US 2006-0200121 A1 (MOWERY, THOMAS M.) 07 September 2006 See abstract; paragraph [0017]; and claims 1, 16-17, 20.	1-4,13-16,28-30,37-39
A	US 2011-0098701 A1 (MCINTYRE, JON T. et al.) 28 April 2011 See abstract; and claims 21-24, 27, 35.	1-4,13-16,28-30,37-39

☐ Further documents are listed in the continuation of Box C.

☒ See patent family annex.

* Special categories of cited documents:
"A" document defining the general state of the art which is not considered to be of particular relevance
"E" earlier application or patent but published on or after the international filing date
"L" document which may throw doubts on priority claim(s) or which is cited to establish the publication date of another citation or other special reason (as specified)
"O" document referring to an oral disclosure, use, exhibition or other means
"P" document published prior to the international filing date but later than the priority date claimed
"T" later document published after the international filing date or priority date and not in conflict with the application but cited to understand the principle or theory underlying the invention
"X" document of particular relevance; the claimed invention cannot be considered novel or cannot be considered to involve an inventive step when the document is taken alone
"Y" document of particular relevance; the claimed invention cannot be considered to involve an inventive step when the document is combined with one or more other such documents,such combination being obvious to a person skilled in the art
"&" document member of the same patent family

Date of the actual completion of the international search	Date of mailing of the international search report
21 February 2018 (21.02.2018)	**21 February 2018 (21.02.2018)**

Name and mailing address of the ISA/KR
International Application Division
Korean Intellectual Property Office
189 Cheongsa-ro, Seo-gu, Daejeon, 35208, Republic of Korea
Facsimile No. +82-42-481-8578

Authorized officer
KIM, Sun Hee
Telephone No. +82-42-481-5405

INTERNATIONAL SEARCH REPORT

International application No.
PCT/US2017/063281

Box No. II Observations where certain claims were found unsearchable (Continuation of item 2 of first sheet)

This international search report has not been established in respect of certain claims under Article 17(2)(a) for the following reasons:

1. ☒ Claims Nos.: 23-27, 40-49
because they relate to subject matter not required to be searched by this Authority, namely:
Claims 23-27 and 40-49 pertain to a method for treatment of the human body by surgery and thus relate to a subject matter which this International Searching Authority is not required to search under PCT Article 17(2)(a)(i) and Rule 39.1(iv).

2. ☒ Claims Nos.: 12, 21, 32-36
because they relate to parts of the international application that do not comply with the prescribed requirements to such an extent that no meaningful international search can be carried out, specifically:
Claims 12, 21 and 32-36 are not clear because they refer to multiple dependent claims which do not comply with PCT Rule 6.4(a).

3. ☒ Claims Nos.: 5-11, 17-20, 22, 27, 31
because they are dependent claims and are not drafted in accordance with the second and third sentences of Rule 6.4(a).

Box No. III Observations where unity of invention is lacking (Continuation of item 3 of first sheet)

This International Searching Authority found multiple inventions in this international application, as follows:

1. ☐ As all required addtional search fees were timely paid by the applicant, this international search report covers all searchable claims.

2. ☐ As all searchable claims could be searched without effort justifying an additional fees, this Authority did not invite payment of any additional fees.

3. ☐ As only some of the required additional search fees were timely paid by the applicant, this international search report covers only those claims for which fees were paid, specifically claims Nos.:

4. ☐ No required additional search fees were timely paid by the applicant. Consequently, this international search report is restricted to the invention first mentioned in the claims; it is covered by claims Nos.:

Remark on Protest

☐ The additional search fees were accompanied by the applicant's protest and, where applicable, the payment of a protest fee.
☐ The additional search fees were accompanied by the applicant's protest but the applicable protest fee was not paid within the time limit specified in the invitation.
☐ No protest accompanied the payment of additional search fees.

INTERNATIONAL SEARCH REPORT

Information on patent family members

International application No.

PCT/US2017/063281

Patent document cited in search report	Publication date	Patent family member(s)	Publication date
US 2015-0216594 A1	06/08/2015	EP 2085047 A1	05/08/2009
		JP 2010-162300 A	29/07/2010
		US 2009-0198227 A1	06/08/2009
		US 2013-0131670 A1	23/05/2013
		US 8353902 B2	15/01/2013
		US 9023026 B2	05/05/2015
US 6575969 B1	10/06/2003	AT 308930 T	15/11/2005
		AT 352999 T	15/02/2007
		AU 5727096 A	21/11/1996
		AU 752140 B2	05/09/2002
		AU 8512998 A	16/02/1999
		CA 2297846 A1	04/02/1999
		CA 2297846 C	28/04/2009
		DE 69635423 T2	08/06/2006
		DE 69636885 T2	21/06/2007
		DE 69827799 T2	15/12/2005
		EP 0998235 A1	10/05/2000
		EP 0998235 B1	24/11/2004
		EP 1011495 A1	28/06/2000
		EP 1011495 B1	09/11/2005
		EP 1462065 A2	29/09/2004
		EP 1462065 A3	05/01/2005
		EP 1462065 B1	31/01/2007
		EP 1493397 A1	05/01/2005
		EP 1493397 B1	14/09/2011
		EP 1493397 B2	29/07/2015
		ES 2234136 T3	16/06/2005
		ES 2371067 T3	27/12/2011
		JP 2001-510702 A	07/08/2001
		JP 4203224 B2	24/12/2008
		US 2002-0111615 A1	15/08/2002
		US 6241725 B1	05/06/2001
		US 6506189 B1	14/01/2003
		US 6530922 B2	11/03/2003
		WO 96-34571 A1	07/11/1996
		WO 99-04710 A1	04/02/1999
WO 2010-135602 A1	25/11/2010	AU 2008-322467 A1	22/05/2009
		CA 2705762 A1	22/05/2009
		CA 2872107 A1	07/11/2013
		CN 101909532 A	08/12/2010
		CN 101909532 B	19/03/2014
		CN 104718001 A	17/06/2015
		CN 104718001 B	11/07/2017
		EP 2222236 A1	01/09/2010
		EP 2844332 A1	11/03/2015
		HK 1151706 A1	28/11/2014
		HK 1205701 A1	24/12/2015

INTERNATIONAL SEARCH REPORT

Information on patent family members

International application No.

PCT/US2017/063281

Patent document cited in search report	Publication date	Patent family member(s)	Publication date
		IN 2202MUN2014 A	11/09/2015
		KR 10-2010-0107449 A	05/10/2010
		US 2009-0131867 A1	21/05/2009
		US 2009-0131886 A1	21/05/2009
		US 2009-0131945 A1	21/05/2009
		US 2009-0131948 A1	21/05/2009
		US 2009-0131950 A1	21/05/2009
		US 2009-0299282 A1	03/12/2009
		US 2012-0158004 A1	21/06/2012
		US 2012-0265186 A1	18/10/2012
		US 2012-0277755 A1	01/11/2012
		US 2013-0345709 A1	26/12/2013
		US 7811291 B2	12/10/2010
		US 7842041 B2	30/11/2010
		US 8827981 B2	09/09/2014
		US 9510885 B2	06/12/2016
		WO 2009-065085 A1	22/05/2009
		WO 2011-066465 A1	03/06/2011
		WO 2013-166209 A1	07/11/2013
US 2006-0200121 A1	07/09/2006	None	
US 2011-0098701 A1	28/04/2011	EP 1915101 A1	30/04/2008
		EP 1915101 B1	27/11/2013
		US 2007-0021745 A1	25/01/2007
		US 7794458 B2	14/09/2010
		US 8313482 B2	20/11/2012
		WO 2007-018594 A1	15/02/2007