US 20150107856A1

(19) United States

(12) Patent Application Publication

Malathong et al.

(10) Pub. No.: US 2015/0107856 A1

(43) Pub. Date: Apr. 23, 2015

(54) **SLIP ASSEMBLY**

(71) Applicant: **McCoy Corporation**, Edmonton (CA)

(72) Inventors: **Vetsouvanh Malathong**, Broussard, LA (US); **Jonathan Ancelet**, Broussard, LA (US)

(21) Appl. No.: **14/396,582**

(22) PCT Filed: **Apr. 25, 2013**

(86) PCT No.: **PCT/CA2013/000411**

§ 371 (c)(1),
(2) Date: **Oct. 23, 2014**

**Related U.S. Application Data**

(60) Provisional application No. 61/638,057, filed on Apr. 25, 2012.

**Publication Classification**

(51) **Int. Cl.**

| | |
|---|---|
| ***E21B 19/07*** | (2006.01) |
| ***E21B 33/04*** | (2006.01) |
| ***E21B 17/00*** | (2006.01) |

(52) **U.S. Cl.**

CPC ..... ***E21B 19/07*** (2013.01); ***E21B 17/00*** (2013.01); ***E21B 33/0422*** (2013.01)

(57) **ABSTRACT**

A gripping system is taught for gripping oil well casing, casing string or other string comprising one or more slips cammed against one or more inclined recesses when the gripping system is rotated to maintain gripping engagement of the casing. A further gripping system is taught for gripping oil well casing, casing string or other string comprising one or more slips received into one or more inclined recesses. A method is taught for gripping casing sections or casing strings. The method comprises the steps of providing a gripping system comprising one or more recesses and one or more slips, setting said one or more slips on the casing section and rotating the gripping system to cam said one or more slips against said one or more inclined recesses, wherein camming said one or more slips against said one or more inclined recesses serves to maintain gripping engagement on the casing. A further method is taught for gripping casing sections or casing strings. The method comprises the steps of receiving a slip into each of one or more inclined recesses of a gripping system, setting said one or more slips on the casing section and rotating the gripping system.

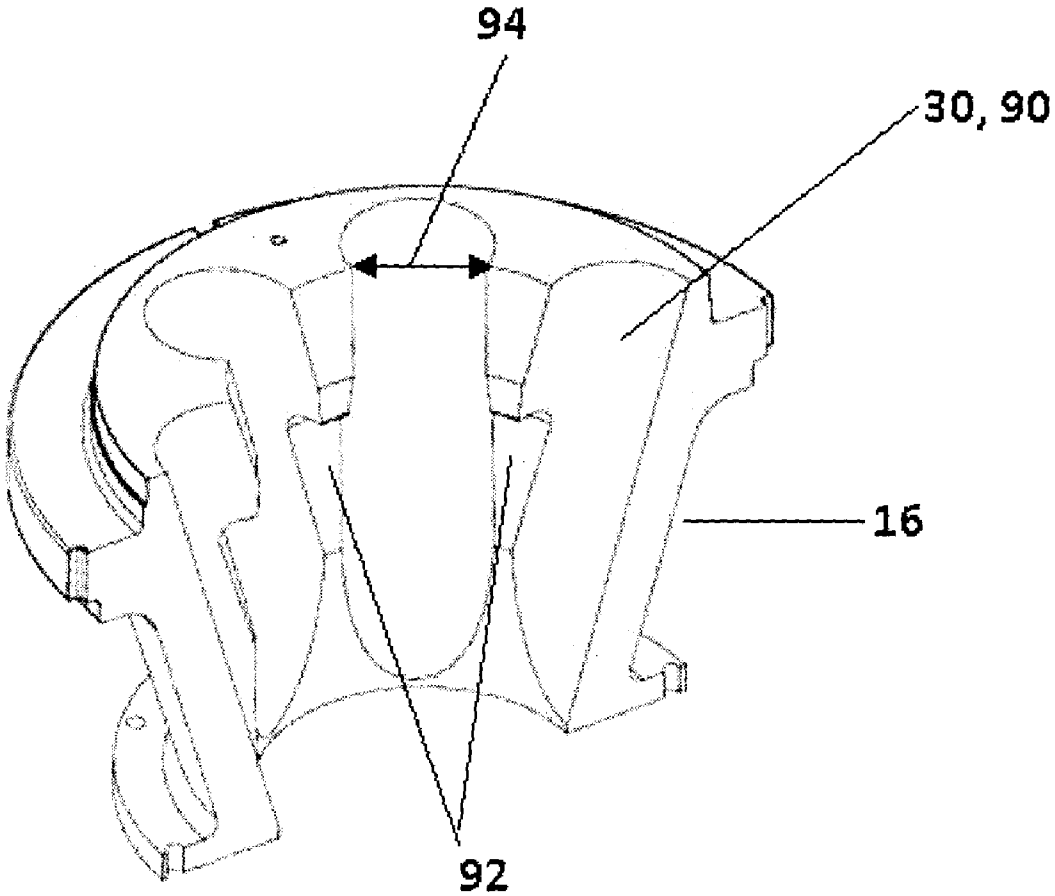

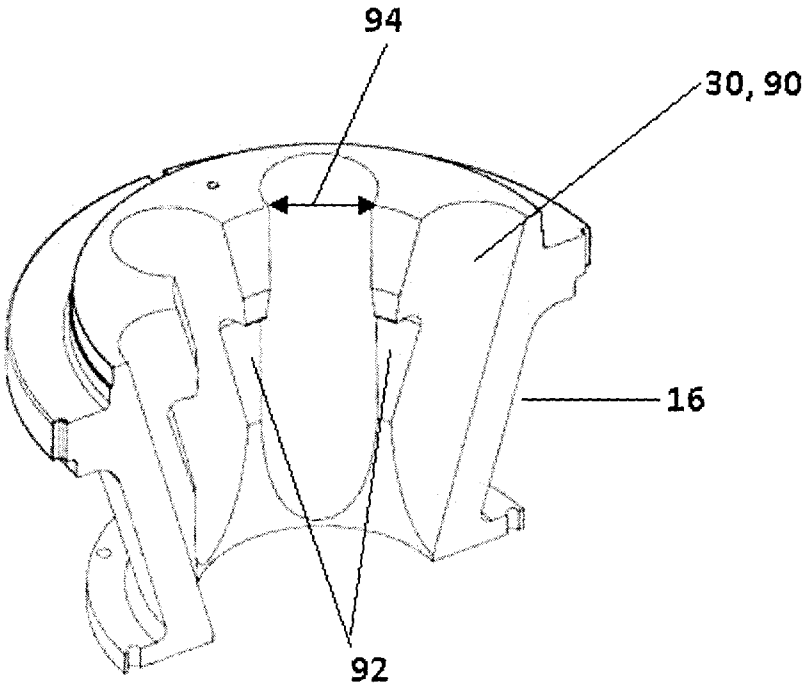


Figure 1

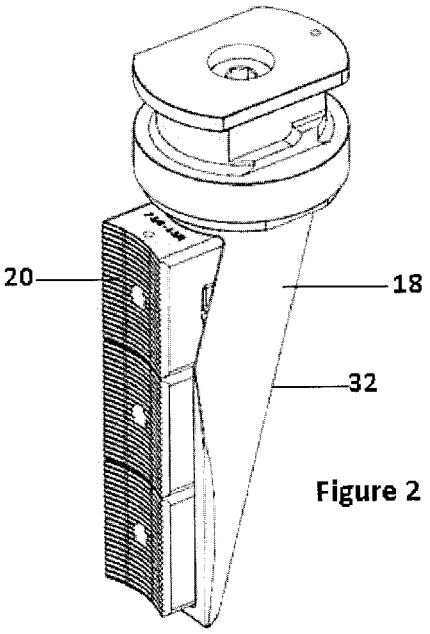


Figure 2

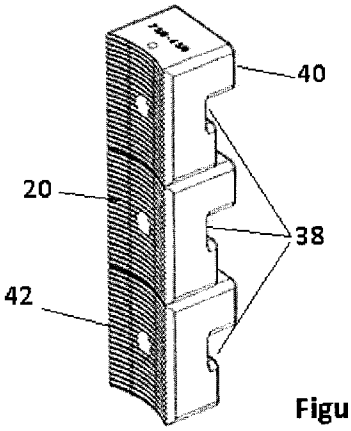


Figure 3

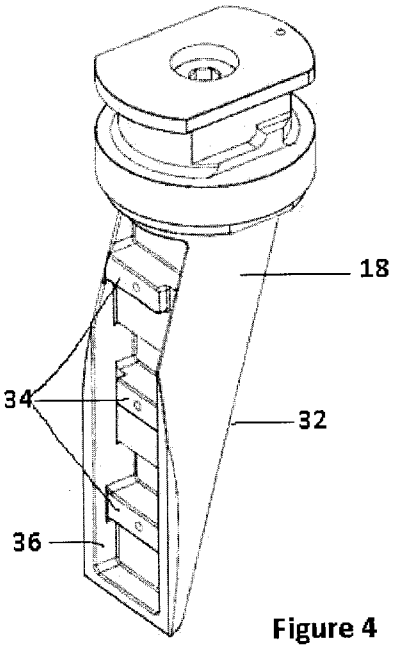


Figure 4

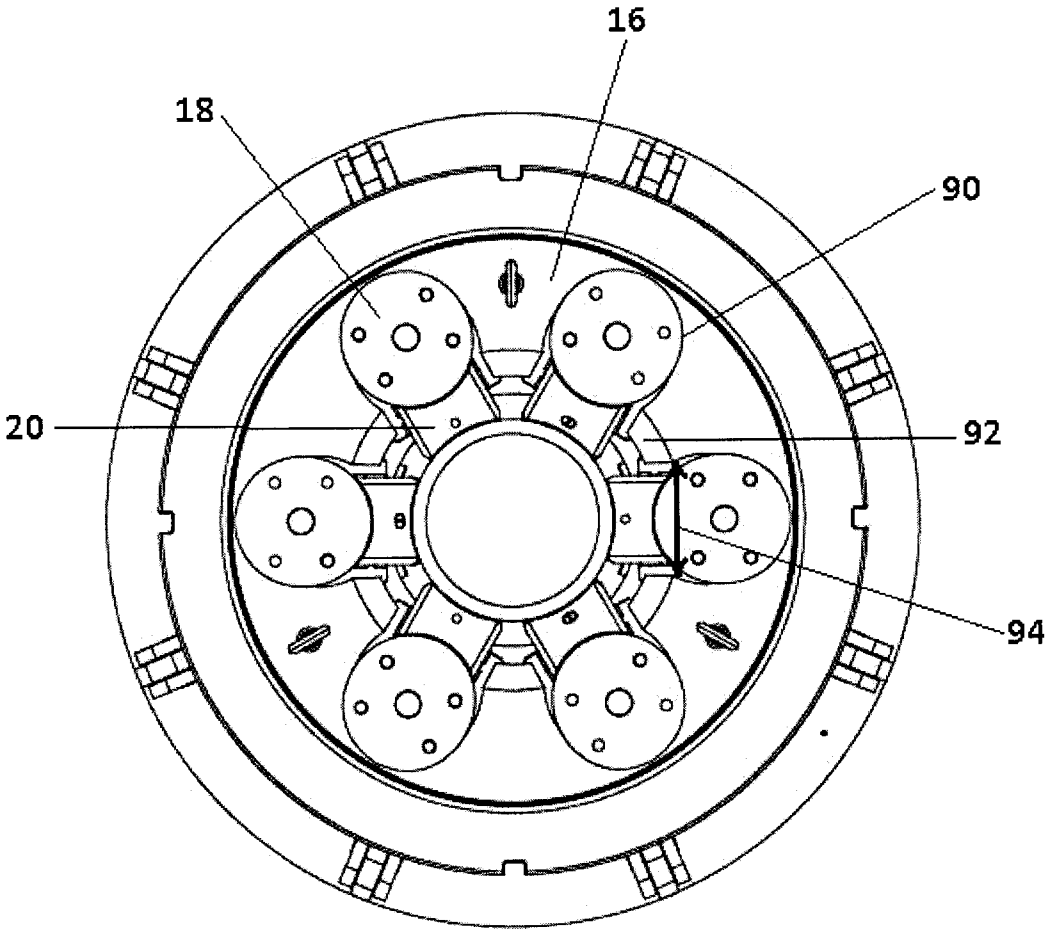


Figure 5

# SLIP ASSEMBLY

## FIELD OF THE INVENTION

**[0001]** The present invention relates to a slip assemblies and methods for gripping casing joints and casing strings.

## BACKGROUND

**[0002]** Slip assemblies are well known in the down-hole drilling and oil and gas industry. Slip assemblies are used to grip casing sections or strings, also called tubulars or piping, for a number of purposes including drilling, making up or breaking out casing strings and performing operations to produce oil from the well. Casing strings are made up by connecting multiple threaded casing sections together and feeding them into the wellbore. Rotation of a first casing into a second casing is conducted until the thread male and female ends engage one another.

**[0003]** The gripping mechanism of the slip assembly must be able to carry large loads and in certain operations including make up or break out operations do so while rotationally gripping the casing section or casing string. The components of the slip assembly must also cooperate to set and unset with ease and to maintain a fully set position on the casing section or casing string during torqueing and rotation.

**[0004]** While a number of prior art patents including U.S. Pat No. 6,631,792, U.S. Pat. No. 7,891,469 and U.S. Pat. No. 7,775,270 teach slip assemblies with means of guiding a slip into engagement with a casing section. However these patents do not address means of maintaining gripping of the casing during rotation and torqueing of the slip assembly for any number of operations including casing make up and break out or any operation involving rotation and torqueing where axial loads may exist.

**[0005]** A need and interest therefore exists in the art to develop improved slip assemblies and gripping systems and methods for making up casing strings.

## SUMMARY

**[0006]** A gripping system is taught for gripping oil well casing, casing string or other string comprising one or more slips cammed against one or more inclined recesses when the gripping system is rotated to enhance gripping engagement of the casing.

**[0007]** A further gripping system is taught for gripping oil well casing, casing string or other string comprising one or more slips received into one or more inclined recesses.

**[0008]** A method is taught for gripping casing sections or casing strings. The method comprises the steps of providing a gripping system comprising one or more recesses and one or more slips, setting said one or more slips on the casing section and rotating the gripping system to cam said one or more slips against said one or more inclined recesses, wherein camming said one or more slips against said one or more inclined recesses serves to enhance gripping engagement on the casing.

**[0009]** A further method is taught for gripping casing sections or casing strings. The method comprises the steps of receiving a slip into each of one or more inclined recesses of a gripping system, setting said one or more slips on the casing section and rotating the gripping system.

## BRIEF DESCRIPTION OF THE DRAWINGS

**[0010]** The present invention will now be described in greater detail, with reference to the following drawings, in which:

**[0011]** FIG. **1** is an isometric view of a part of the slip assembly of the present invention;

**[0012]** FIG. **2** is an isometric view of further parts of the slip assembly of the present invention;

**[0013]** FIG. **3** is an isometric view of yet further parts of the slip assembly of the present invention;

**[0014]** FIG. **4** is an isometric view of yet further parts of the slip assembly of the present invention; and

**[0015]** FIG. **5** is a top plan view of one embodiment of the present slip assembly.

## DESCRIPTION OF THE INVENTION

**[0016]** The slip assembly of the present invention, also called a gripping system can be used in conjunction with a number of tools known in the field of oil well completion and production. These tools include but are not limited to elevators, spiders, flush mount spiders, snubbing tools, bucking units and back up tongs. The present slip assemblies can be used in relation to any operations involving hoisting and rotation of a casing string or casing section or in any operation in which a casing string, casing section or tubular of any kind is torqued or rotated while under axial loading forces. These operations include but are not limited to casing make up or break out "drilling with casing", snubbing operations and horizontal wellbore operations.

**[0017]** The slip assemblies of the present invention are preferably actuated by one or more cylinders (not shown) that extend to set one or more gripping members of the slip assembly and retract to release said gripping members. Other means of actuation are also possible and would be understood by a person of skill in the art to be encompassed by the scope of the present invention

**[0018]** The present slip assembly or gripping system **14** is now described with references to FIGS. **1** to **5**.

**[0019]** The seat **16** of the gripping system **14** preferably comprises an array of one or more separate inclined elements **30** for receiving slips **18**.

**[0020]** In a further preferred embodiment, the inclined elements **30** comprise one or more integral or non-integral means of laterally retaining the slips **18** in the inclined elements **30**, in such a way that the slips **18** are prevented from falling or tipping towards a central bore of the casing gripping system **14**. Examples of non-integral retaining means include but are not limited to strips, plates, clips, cages, bars, tabs and rings that can be removably attached to at least a portion of the slip **18** and at least a portion of the seat **16** to laterally retain the slip **18** to the inclined element **30**. Integral retaining means can include but are not limited to mating profiles on at least a portion of the slip **18** and on at least a portion of the inclined elements **30** that connect to hold the slip **18** to the inclined element **30**; such mating profiles can include shiplap profiles, tongue-and-groove profiles, dovetail profiles or other profiles well known in the art.

**[0021]** As seen in FIGS. **1** and **2**, the inclined elements **30** can more preferably be in the form of an array of one or more inclined recesses **90** that correspond to a rear face **32** of the slips **18**, thereby generating radially inward movement of the slips **18** to grip the casing joint **10** as the slips **18** are disposed

longitudinally within inclined recesses **90**, without the need for separate tracks, cam followers, springs or other means.

**[0022]** Preferably, the inclined recesses **90** have a cylindrical geometry and part-circular cross section to match a cylindrical geometry and part circular cross section of the slips **18**. It is also possible for the inclined recesses **90** and slips **18** to have cross sections that are partial rectangles, partial squares, partial ovals, partial rhomboids and partial triangles or other cross-sectional geometries.

**[0023]** In a preferred embodiment, the inclined recesses **90** can comprise an integral retaining means along at least a portion of the axial length of the inclined recess **90**. In one example, at least a portion of longitudinal edges **92** of the inclined recesses **90** comprise an integral throat, tab or strip that act to restrict the size of the mouth **94** of the inclined recess **90**, to thereby capture slips **18** and laterally retain slips **18** from falling or tipping into the central bore of the seat **16**.

**[0024]** In a further preferred embodiment, the inclined recesses **90** are machined to a cross sectional geometry that restricts the mouth **94** of the inclined recesses **90** to be smaller than the widest cross section of the slip **18**. In this embodiment the recesses **90** function to partially circumferentially capture the slips **18**. To effect this embodiment, at least a portion of the axial length of the inclined recesses **90** is machined such that the desired cross sectional geometry converges to restrict mouth **94**. In the preferred case of a partial circle cross-section, at least a portion of the axial length of the inclined recess **90** is formed as more than half of a circle, otherwise put, more than a semi-circle, to provide a restriction to mouth **94** such that the slip **18** cannot fall into the central bore of the seat **16**.

**[0025]** In a preferred embodiment of the present invention, the slips **18** and the recesses **90** interact in such a way as to enhance gripping forces on the casing section **10** during rotation. In a preferred embodiment, the slips **18** are caused to cam or wedge into the recesses **90** to thereby maintain a firm penetration of the dies **20** in the slips **18** and a firm grip of the outer surface of the casing section **10** by the dies **20** during casing make up or break out operations.

**[0026]** Most preferably slips **18** are nominally smaller in cross section than inclined recesses **90**. When the slips **18** and dies **20** of the present gripping system **14** are set on the casing section **10** to be made up, the top drive is rotated to rotate gripping system **14**. During rotation, gripping torque causes the slightly smaller slip **18** to advantageously rotate slightly. This results in a line of force in which the dies **20** are forced into a front face **36** of the slips **18**, in turn forcing a rear face **32** of the slip to cam into and against the inclined recesses **90**. This serves to further frictionally arrest the dies **20** into the slips **18**, and the slips **18** into the inclined recesses **90**, and thereby enhances frictional engagement of the dies to the casing section **10** during make up and break out operations.

**[0027]** Although present seat **16** is preferably shown as having a conical form, it would be well understood by a person of skill in the art that numerous alternative forms of seats **16** are possible that would cause the slips **18** to bias radially inwardly as they move axially down the seat **16**. For example, the seat **16** may alternatively have a cylindrical form comprised of one or more inclined elements **30**.

**[0028]** Preferably, the inclined recesses **90** are uniformly spaced around the seat **16**. Most preferably, the inclined recesses **90** are arranged in diametrically opposing pairs.

**[0029]** The dies **20** of the present invention are illustrated in a preferred embodiment in FIGS. **2** and **3**. Most preferably each slip **18** comprises three dies **20** arranged axially along the slip **18**. Support means are provided to support the dies **20** on the slips **18**. A most preferred embodiment of dies **20** and slips **18** is depicted in FIGS. **3** and **4**, in which independent axial load transfer keys or tongues **34** are formed on a front face **36** of the slip **18** that are received in corresponding load transfer grooves **38** formed on a rear face **40** of the dies **20**. A front face **42** of the dies **20** can have any number of profiles and gripping surfaces well known in the art to engage and grip a range of casing joint diameters. The profile may be concave or may be any suitable profile to capture a tubular member when the die **20** comes in contact with such member. Examples of such profiles are well known in the art and would be understood by a skilled practitioner to be included in the scope of the present invention. If concave, the profile of the front face **42** of the dies **20** may preferably have a singular radius of curvature, or a compound radial profile comprising one or more profile sections each having the same or different radii of curvature with either the same or different centers. The surface of the front face **42** of the die **20** may be smooth or may be textured, scored, etched or ridged to provide further gripping of the casing joint **10**.

**[0030]** In the foregoing specification, the invention has been described with a specific embodiment thereof; however, it will be evident that various modifications and changes may be made thereto without departing from the broader spirit and scope of the invention.

**1**. A gripping system for gripping oil well casing, casing string or other string comprising one or more slips cammed against one or more inclined recesses when the gripping system is rotated to enhance gripping engagement of the casing.

**2**. The gripping system of claim **1**, wherein the one or more inclined recesses capture at least a portion of the one or more slips.

**3**. The gripping system of claim **2**, wherein at least an axial portion of said one or more inclined recesses surrounds greater than 180 degrees of the one or more slips.

**4**. The gripping system of claim **3**, wherein the one or more slips have a smaller cross section than said one or more inclined recesses.

**5**. The gripping system of claim **4**, wherein rotation of the gripping system serves to rotate a front face of the one or more slips and to cam a rear face of the one or more slips against the one or more inclined recesses.

**6**. The gripping system of claim **2**, wherein one or more recesses have a cross sectional geometry selected from the group consisting of partial circles, partial rectangles, partial squares, partial ovals, partial rhomboids and partial triangles.

**7**. The gripping system of claim **6**, wherein at least a portion of the one or more inclined recesses have a part cylindrical geometry and at least a portion of the one or more slips have a corresponding cylindrical geometry.

**8**. The gripping system of claim **1**, wherein the one or more inclined recesses are housed in a seat.

**9**. The gripping system of claim **8**, wherein the seat has geometry selected from conical and cylindrical.

**10**. The gripping systems of claim **9**, wherein the one or more inclined recesses are uniformly spaced around the seat.

**11**. A gripping system for gripping oil well casing, casing string or other string comprising one or more slips received into one or more inclined recesses.

**12**. The gripping system of claim **11**, wherein at least a portion of the one or more slips are captured by the one or more inclined recesses.

**13**. The gripping system of claim **12**, wherein the one or more recesses comprise a cross sectional geometry for at least a portion of the axial length thereof that surrounds greater than 180 degrees of the one or more slips.

**14**. The gripping system of claim **11**, wherein the one or more slips have a smaller cross section than said one or more inclined recesses.

**15**. The gripping system of claim **14**, wherein rotation of the gripping system serves to rotate a front face of the one or more slips and to force a rear face of the one or more slips against the one or more inclined recesses.

**16**. The gripping system of claim **11**, wherein one or more recesses have a cross sectional geometry selected from the group consisting of partial circles, partial rectangles, partial squares, partial ovals, partial rhomboids and partial triangles.

**17**. The gripping system of claim **16**, wherein at least a portion of the one or more inclined recesses have a part cylindrical geometry and at least a portion of the one or more slips have a corresponding cylindrical geometry.

**18**. The gripping system of claim **17**, wherein at least a portion of the axial length of the inclined recess has a cross sectional geometry that is more than a semi-circle.

**19**. The gripping system of claim **11**, wherein the one or more inclined recesses are housed in a seat.

**20**. The gripping system of claim **19**, wherein the seat has geometry selected from conical and cylindrical.

**21**. The gripping systems of claim **20**, wherein the one or more inclined recesses are uniformly spaced around the seat.

**22**. A method of gripping casing sections or casing strings, said method comprising the steps of:

a) providing a gripping system comprising one or more recesses and one or more slips;

b) setting said one or more slips on the casing section; and

c) rotating the gripping system to cam said one or more slips against said one or more inclined recesses,

wherein camming said one or more slips against said one or more inclined recesses serves to enhance gripping engagement on the casing.

**23**. The method of claim **22**, wherein the one or more slips are at least partially captured by the one or more inclined recesses.

**24**. The method of claim **23**, wherein the one or more recesses comprise a cross sectional geometry on at least a portion of the axial length thereof that surrounds greater than 180 degrees of the one or more slips.

**25**. The method of claim **24**, wherein the one or more slips are cylindrical and wherein at least a portion of the axial length of the one or more inclined recesses has a cross sectional geometry that is more than a semi-circle.

**26**. The method of claim **25**, wherein the one or more slips have a smaller cross section than said one or more inclined recesses.

**27**. The method of claim **26**, wherein rotation of the gripping system serves to rotate the one or more slips and to cam a rear face of the one or more slips against the one or more inclined recesses.

**28**. A method of gripping casing sections or casing strings, said method comprising the steps of:

a) receiving a slip into each of one or more inclined recesses of a gripping system;

b) setting said one or more slips on the casing section; and

c) rotating the gripping system.

**29**. The method of claim **28**, wherein the one or more slips are at least partially captured by the one or more inclined recesses.

**30**. The method of claim **29**, wherein the one or more recesses comprise a cross sectional geometry on at least a portion of the axial length thereof that surrounds greater than 180 degrees of an axial surface of the one or more slips.

**31**. The method of claim **30**, wherein the one or more slips are cylindrical and wherein at least a portion of the axial length of the one or more inclined recesses has a cross sectional geometry that is more than a semi-circle.

**32**. The method of claim **31**, wherein the one or more slips have a smaller cross section than said one or more inclined recesses.

**33**. The method of claim **32**, wherein rotation of the gripping system serves to rotate the one or more slips and to cam a rear face of the one or more slips against the one or more inclined recesses.

* * * * *