May 31, 1927. 1,631,051

W. M. NICHOLS

OIL TANK

Filed Aug. 14, 1925 2 Sheets-Sheet 1

Fig. 1.

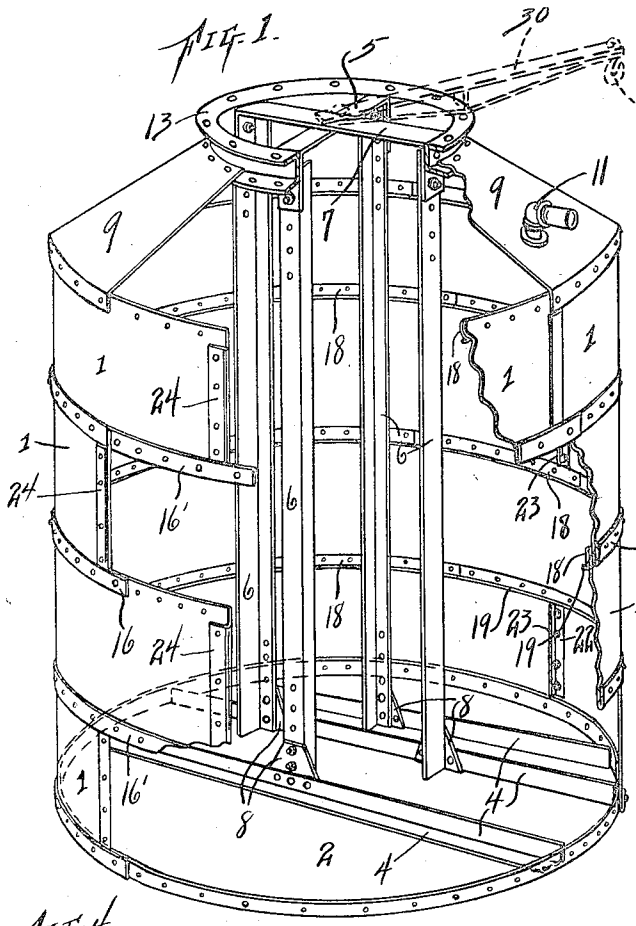

Fig. 2.

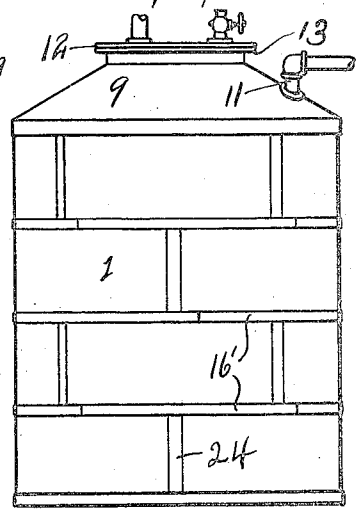

Fig. 3.

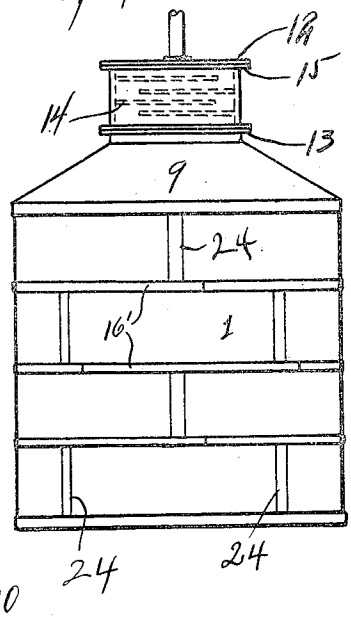

Fig. 4.

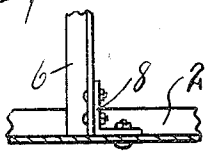

Fig. 5.

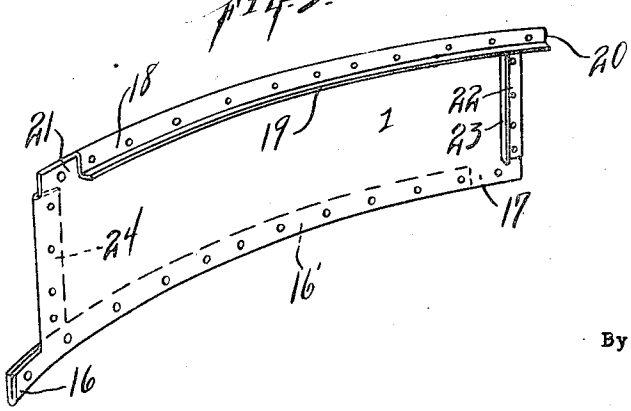

Inventor

WATT M. NICHOLS

By A. L. Jackson

Attorney.

May 31, 1927. 1,631,051

W. M. NICHOLS

OIL TANK

Filed Aug. 14, 1925 2 Sheets-Sheet 2

Fig. 6.

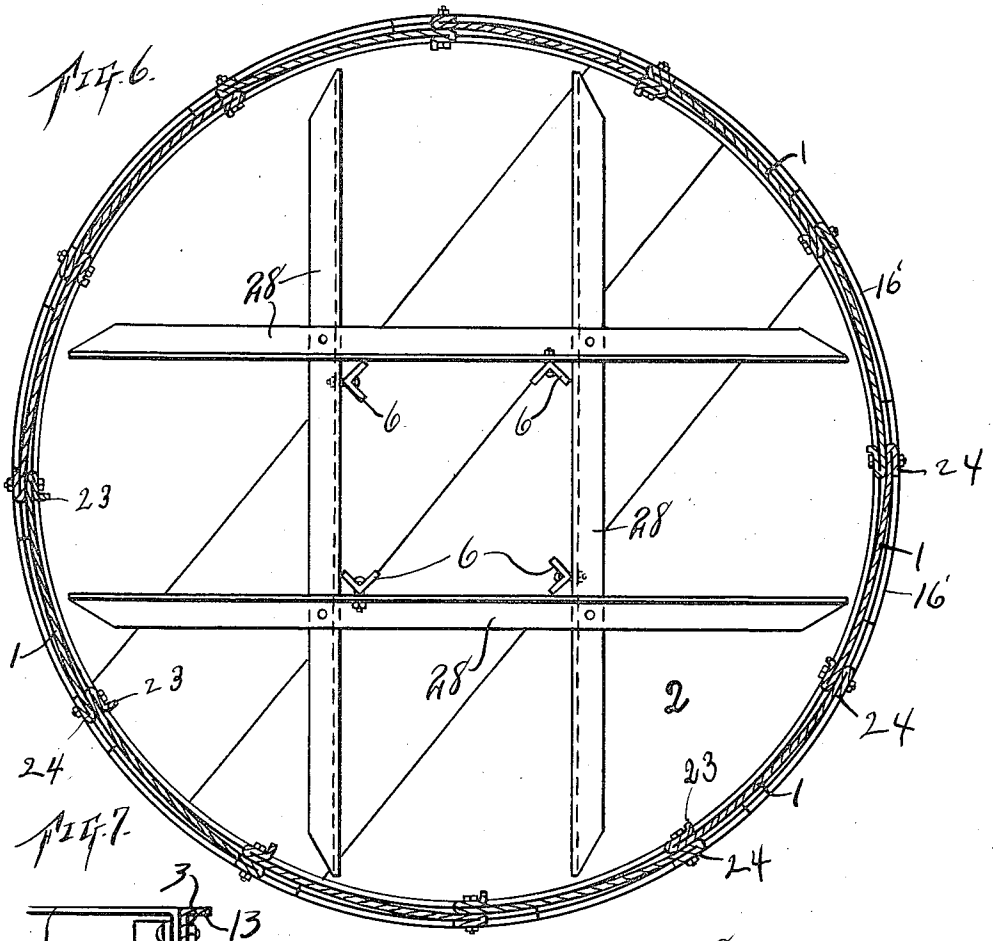

Fig. 7.

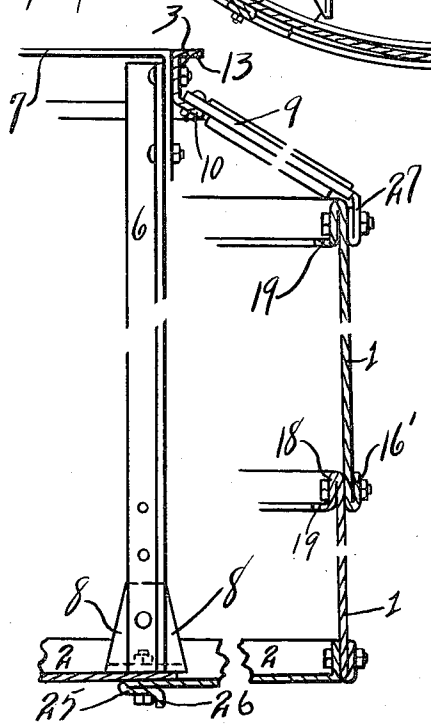

Fig. 8.

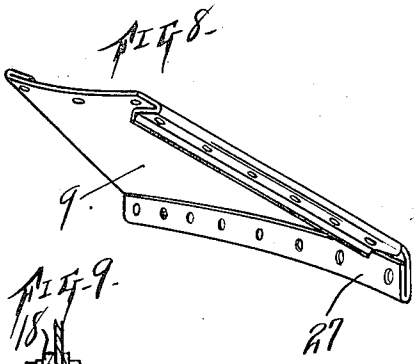

Fig. 9.

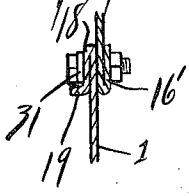

Inventor,

WATT M. NICHOLS,

By A. L. Jackson

Attorney.

Patented May 31, 1927. 1,631,051

UNITED STATES PATENT OFFICE.

WATT M. NICHOLS, OF RANGER, TEXAS.

OIL TANK.

Application filed August 14, 1925. Serial No. 50,318.

My invention relates to tanks and more particularly to oil tanks and particularly to flow tanks; and the object is to provide an improved construction for oil tanks to make the tanks stronger and to provide tanks which can be constructed much quicker than tanks heretofore made. One of the advantages is that the tanks are provided with a central ring or frame at the upper end which adds great strength and eliminates the rafters heretofore used and there are means in connection with said ring which make the construction much more simple and easily accomplished. For this reason the wall construction is made simple and less expensive. Another advantage is that a gas tank can be mounted on top of the tank without changing the construction of the oil tank. The construction is such that the expensive scaffolds heretofore necessary in erecting the tanks may be dispensed with and instead of these scaffolds, simple platforms in connection with the interior braces which are used to lock the central ring or frame. Another advantage is the construction which permits the use of a gin pole for hoisting the tank sections or any other thing that must be hoisted about the tank. Other objects and advantages will be fully explained in the following description and the invention will be more particularly pointed out in the claims.

Reference is had to the accompanying drawings which form a part of this application.

Fig. 1 is a perspective view of the tank partly in section.

Fig. 2 is a side elevation of the tank on a smaller scale.

Fig. 3 is a side elevation of the tank with a gas tank superposed.

Fig. 4 is a detail sectional view, showing the manner of anchoring the top ring frame to the bottom of the tank.

Fig. 5 is a perspective view of one of the side staves or wall forming pieces.

Fig. 6 is a horizontal section of the tank, showing the central supports and frame members.

Fig. 7 is a vertical section of a portion of the tank, showing one of the vertical supports and its connections.

Fig. 8 is a perspective view of a section of the top.

Fig. 9 is a view showing a method of connecting one of the units of the side wall.

Similar characters of reference are used to indicate the same parts throughout the several views.

The side wall of the tank is made up of a plurality of tiers of staves or wall forming units 1 to be hereinafter more particularly described. An interior bracing system is provided for locking the entire tank rigidly and is provided with a bottom 2 which is reenforced by angle bars 4 and is provided with a ring frame 3 and the bottom and the ring frame are rigidly braced by the upright angular posts 6. The frame 3 is substantially U-shaped in vertical cross-section, having radial flanges. This frame is provided with diametrical braces 5 and 7 which have their ends bent at right angles downwardly and bolted to the frame 3 and extended still further downwardly and bolted to the angle iron posts 6. The posts 6 are connected to the angle bars by angle brackets 8 which are bolted to the bars 4 and to the bars 6. It is apparent that the posts 6 may be connected directly to the bottom 2 and in different ways. The entire tank is braced by the posts 6, angle bars 4, and the ring frame 3. The lower tier of staves 1 or wall units 1 are bolted to the bottom 2 by means of an upstanding annular flange on the bottom 2. The top units 9 are bolted to the upper tier of units 1 and to the lower flange 10 of the ring frame 3. Suitable filling and discharge connections 11 are to be provided. The tank is provided with a detachable cap 12 which is bolted to the upper flange 13 of the ring frame 3.

The ring frame 3 and the cap 12 are so constructed and arranged that the cap 12 may be removed and a gas tank 14 having a bottom and top construction which will permit the attaching of the gas tank to the flange 13 and the cap 12, can then be attached to a radial flange 15 on the upper side of the gas tank. The gas tank 14 collects the gas which escapes from the oil and this gas may be used for heating the boilers of the refining plant or the gas may be taken from the tank 14 for any other use.

The wall units 1 are all duplicates. Each stave or unit has a lower locking lug 16 which is integral with the unit. The lug 16 is of double thickness. A portion of the metal of the unit is folded upon itself at the bottom and this folded portion is extended to form the lug 16 and the folded portion 16′ extends as indicated by the

dotted line in Fig. 5, leaving a space 17 on the outside of the unit for the lug 16 of the next unit. The upper edge of the unit is folded inwardly on itself to form a band 18 and a radial flange 19 is formed on the lower edge of the band 18. The object of the band and the flange on it is to add strength. The folded portion 18 and the flange 19 are extended beyond the edge of the unit to form a lug 20 for attaching to the next unit. A portion of the lapped member 18 and the flange 19 are cut away at 21 to make space for the lug 20 of the adjacent unit. A similar lapped member 22 and flange 23 are formed on the vertical edge of each unit. At the opposite vertical edge a lap 24 is folded on the outside of the unit. In installing the units, the end of the unit which carries the lap 24 laps on the outside of the adjacent unit covering the end which carries the members 22 and 23. From the construction shown, it will be seen that each horizontal seam is made up of four thicknesses of metal with the attaching bolts running through the four thicknesses. The members 18, 20 and 21 are on the upper edges of each unit and the member 16 is on the lower edge of each unit. The seams or joints formed by the vertical juncture are broken relative to each other to distribute the strength of the folded portions to different points of the circumference.

The sections of the bottom are connected as shown in Fig. 7. A lap or fold 25 is folded on the underside of a section and the adjacent section is bolted thereto through the three thicknesses of metal. A downwardly projecting flange 26 is formed to add strength to the joint. The top of the tank is made up of units 9 which are connected in a similar manner to the connection of the bottom sections. The lower edge of the units 9 may be lapped to form a strengthening band 27.

One of the advantages of the improved tank is that the posts 6 are utilized to form scaffolds for erecting the tanks. Cross-bars 28 are bolted to the posts 6 on which boards may be placed to form scaffolds for erecting purposes.

After the bottom 2 is put together, the ring frame 3 is placed on the bottom and each post 6 is connected to the ring 3 by a single bolt. The ring frame 3 is then hoisted carrying the posts 6 swinging therefrom. The posts 6 are then connected to the bottom by the brackets 8. The ring frame 3 is connected to the posts 6 by bolts as shown particularly in Figs. 1 and 7. The first two tiers of units 1 may be attached without a scaffold. The angle bars 28 may be attached to the posts 6 at different vertical positions so that the additional tiers of units may be erected as the erection of the tank progresses.

One advantage of the ring frame 3 is that a gin pole 30 may be pivotally connected to the center of the frame and the end projected beyond the edge of the top. The outer end of gin pole may be swung to all points about the tank. The gin pole 30 is provided with a hook 29 on the outer end so that a block and tackle may be suspended for use in raising the units 1 to their positions.

The oil is prevented from passing through the bolt holes by placing a washer 31 of asbestos or other suitable material between the head of the bolt and the tank unit, as shown in Fig. 9. The bolt passes through the lapped portion 16′ of the lower section and through the lapped portion 18 of the adjacent section. The washer 31 prevents leaks.

The various lapped portions of the metal strengthen the parts about the bolt holes. The flanges which project at right angles from the lapped portions serve to prevent the turning of the bolts when the nuts are being screwed up on the outside and also hold any gaskets that may be placed under the bolt heads. The flanges which project at right angles to the top units 9 serve as rafters to give strength to the tank.

What I claim is,—

1. An oil tank comprising a bottom and angle bars attached thereto, a cylindrical wall attached to said bottom and consisting of a plurality of tiers superposed on each other and each tier consisting of a plurality of units connected together by seal tight joints, a top connected to the upper tier of units, a central ring frame attached to said top, and braces attached to the circumferential portions of said frame and to said bottom angle bars.

2. An oil tank comprising a bottom and bracing angle bars attached thereto, a cylindrical wall attached to said bottom and consisting of a plurality of tiers superposed on each other and each tier consisting of a plurality of units connected to each other by seal tight joints, a top consisting of a plurality of units connected to each other and to said top and having depending flanges serving as rafters, a central ring frame having upper and lower radial flanges and the lower flange attached to said top for providing for extensions of the tank, and a cap attached to said upper flange.

3. An oil tank comprising a bottom and bracing angle bars attached thereto, a cylindrical wall attached to said bottom and consisting of a plurality of tiers superposed upon each other connected by seal tight joints and each tier consisting of a plurality of units connected by seal tight joints, a top connected to the upper tier, a central ring frame having upper and lower radial flanges and having the lower flange connect-

ed to said top, diagonal braces attached to the interior of said frame and provided with depending hanger members, a cap attached to said upper flange, and braces attached to said depending members and to the angle bars of said bottom.

4. An oil tank comprising a bottom, a cylindrical wall connected thereto and consisting of a plurality of units connected by seal tight joints, a top connected to said wall, a central ring frame connected to said top to provide for extensions of said tank, and braces connected to said frame and to said bottom, said braces serving to lock the top and bottom in rigid fixed relation and serving to support a scaffold for building purposes in erecting the tank.

5. An oil tank comprising a bottom, a cylindrical wall connected thereto, angle braces attached to said bottom, a top connected to said wall, a central ring frame connected to said top to provide for extensions of said tank, and diagonal braces attached to the interior of said ring frame and serving to brace the frame and serving for the pivotal mounting of a gin pole for erecting said wall.

In testimony whereof, I set my hand, this 10th day of August, 1925.

WATT M. NICHOLS.