(12) INTERNATIONAL APPLICATION PUBLISHED UNDER THE PATENT COOPERATION TREATY (PCT)

(19) World Intellectual Property Organization
International Bureau

(43) International Publication Date
06 July 2023 (06.07.2023)

WIPO | PCT

(10) International Publication Number
WO 2023/126933 A1

(51) International Patent Classification:
F16B 31/00 (2006.01) *B64G 1/64* (2006.01)
F42B 3/00 (2006.01)

(21) International Application Number:
PCT/IL2022/051401

(22) International Filing Date:
28 December 2022 (28.12.2022)

(25) Filing Language: English

(26) Publication Language: English

(30) Priority Data:
290029 30 December 2021 (30.12.2021) IL

(71) Applicant: **ISRAEL AEROSPACE INDUSTRIES LTD.** [IL/IL]; Ben-Gurion International Airport, 7010000 Lod (IL).

(72) Inventors: **KRAIZMAN, Yaacov**; C/O ISRAEL AEROSPACE INDUSTRIES LTD., Ben-Gurion International Airport, 7010000 Lod (IL). **LAHAV, Tal**; c/o ISRAEL AEROSPACE INDUSTRIES LTD., Ben-Gurion International Airport, 7010000 Lod (IL). **ASSAF, Dori**; c/o ISRAEL AEROSPACE INDUSTRIES LTD., Ben-Gurion International Airport, 7010000 Lod (IL).

(74) Agent: **SERUYA, Yehuda**; REINHOLD COHN & PARTNERS, POB 13239, 6113102 Tel-Aviv (IL).

(81) Designated States *(unless otherwise indicated, for every kind of national protection available)*: AE, AG, AL, AM, AO, AT, AU, AZ, BA, BB, BG, BH, BN, BR, BW, BY, BZ, CA, CH, CL, CN, CO, CR, CU, CV, CZ, DE, DJ, DK, DM, DO, DZ, EC, EE, EG, ES, FI, GB, GD, GE, GH, GM, GT, HN, HR, HU, ID, IL, IN, IQ, IR, IS, IT, JM, JO, JP, KE, KG, KH, KN, KP, KR, KW, KZ, LA, LC, LK, LR, LS, LU, LY, MA, MD, MG, MK, MN, MW, MX, MY, MZ, NA, NG, NI, NO, NZ, OM, PA, PE, PG, PH, PL, PT, QA, RO, RS, RU, RW, SA, SC, SD, SE, SG, SK, SL, ST, SV, SY, TH, TJ, TM, TN, TR, TT, TZ, UA, UG, US, UZ, VC, VN, WS, ZA, ZM, ZW.

(84) Designated States *(unless otherwise indicated, for every kind of regional protection available)*: ARIPO (BW, CV, GH, GM, KE, LR, LS, MW, MZ, NA, RW, SD, SL, ST, SZ, TZ, UG, ZM, ZW), Eurasian (AM, AZ, BY, KG, KZ, RU, TJ, TM), European (AL, AT, BE, BG, CH, CY, CZ, DE, DK, EE, ES, FI, FR, GB, GR, HR, HU, IE, IS, IT, LT, LU, LV, MC, ME, MK, MT, NL, NO, PL, PT, RO, RS, SE, SI, SK, SM, TR), OAPI (BF, BJ, CF, CG, CI, CM, GA, GN, GQ, GW, KM, ML, MR, NE, SN, TD, TG).

(54) Title: BOLT SYSTEM

(57) Abstract: An explosive bolt system includes an explosive bolt and an initiator device. The explosive bolt includes a shank having a first longitudinal end, an opposed second longitudinal end, and a longitudinal axis. The explosive bolt is configured for securing two elements together between the first longitudinal end and the second longitudinal end. The shank includes an internal chamber accommodating a first layer of a high density first secondary explosive material, and further accommodating a second layer of a low density second secondary explosive material in arming communication with the first layer. The initiator device is positioned with respect to the explosive bolt such that the initiator device is in arming communication with the explosive bolt.

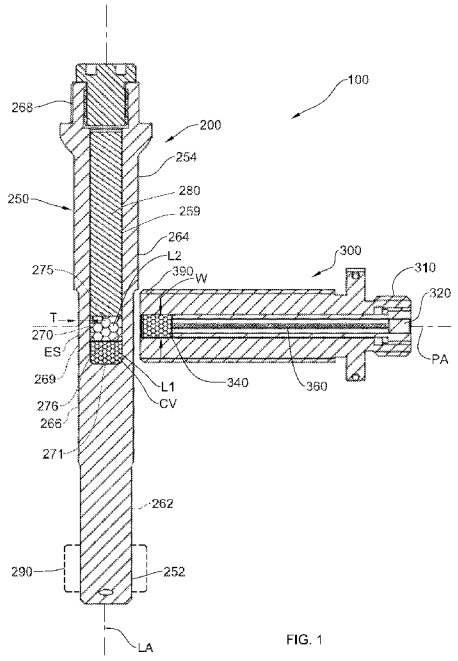

FIG. 1

WO 2023/126933 A1

[Continued on next page]

Published:
— *with international search report (Art. 21(3))*

BOLT SYSTEM

TECHNOLOGICAL FIELD

The presently disclosed subject matter relates to explosive bolts, in particular to explosive bolts that are used for separating two connected components.

BACKGROUND

Explosive bolts are well known and have many uses. Some such uses include aerospace applications, including for example such use in space vehicles as well as multi-stage rocket or missile configurations.

By way of non-limiting example, US 10,989,243 discloses an explosive bolt for securing a brace in tension. The bolt includes a bar, a pair of explosives, a pair of detonators and a pair of anchors. The bar has opposing longitudinal ends and an outer thickness. Opposing bores extend inwardly from the longitudinal ends to corresponding depth ends. First and second notches reduce the thickness proximate to the corresponding depth ends. A center rod separates the notches from each other. Each explosive correspondingly inserts into a corresponding bore to a corresponding depth end. Each detonator correspondingly inserts into the corresponding bore. Each anchor secures the bar to the brace.

Also by way of non-limiting example, RU2705859 relates to space engineering, particularly, to separation bolts. Separation bolt for connection and subsequent fast disconnection of structure elements as per instruction includes power casing, charge and electric detonator.

Also by way of non-limiting example, US 5,402,728 relates to a releasable attaching apparatus for attaching a portion of a first object to a portion of a second object. The attaching apparatus has an attaching member with walls defining a cavity therein. A

rapidly expanding material is placed within the cavity such that when the material is caused to expand, the attaching member will break at a failure zone located adjacent to the cavity. The rapidly expanding material is a composition that undergoes a phase change from a solid to a liquid, wherein the volume of the liquid is larger than the volume of the solid. In operation, an initiator triggers the phase change which causes a pressure build-up in the cavity, thereby loading the attaching member and causing it to break at the failure zone. Accordingly, the first and second objects are freed from one another.

Also by way of non-limiting example, US 4,316,412 discloses a low voltage, electrically actuated, nonprimary explosive detonator wherein said detonation is achieved by means of an explosive train in which a deflagration-to-detonation transition is made to occur. The explosive train is confined within a cylindrical body and positioned adjacent to low voltage ignition means have electrical leads extending outwardly from the cylindrical confining body. Application of a low voltage current to the electrical leads ignites a self-sustained deflagration in a donor portion of the explosive train which then is made to undergo a transition to detonation further down the train.

Also by way of non-limiting example, US 3,792,662 discloses a system for the removal of an attachment from one end of a detonating device prior to the detonation of the main charge.

Also by way of non-limiting example, US 3,530,759 discloses a severable element for use as a quick-disconnect connecting means and for other uses, comprising: a body; a chamber extending from an outer end of the body; a quantity of material in the inner end of the chamber which is substantially incompressible and is capable of being spread under pressure without disintegrating; an annular groove in the body defining a circumferential severing area of reduced cross-section; the inner end of said material being proximate said severing area; and means for applying pressure to said material to deform it and sever said element including a plunger having its inner end adjacent said material.

Also by way of non-limiting example, US 3,196,746 discloses a releasable fastener which can be instantaneously severed at a predetermined location and which is characterized by substantially shrapnel-free and nonleaking operation, comprising: (a) an elongated housing adapted to engage with associated elements, said elongated housing having a central longitudinal bore closed at one end and containing in sequence from said

end (b) a base charge of a high velocity detonating explosive, (c) a priming charge in propagating relationship to the base charge, (d) a rigid compression plunger contiguous to the priming charge, said plunger being slidably mounted in and peripherally engaged by the bore, (e) a plug of a pressure-extrudable material contiguous to said plunger and peripherally engaged by the bore, (f) rigid closure means contiguous to said plug and closing said bore, said closure means, plug and compression plunger each having an aperture therethrough which is substantially coaxial with the bore of said housing, and a length of low-energy detonation-transmitting cord extending through the aperture in the closure means and plug and terminating in propagating relationship to the priming charge, said cord being peripherally engaged by the wall of said aperture in the closure means and comprising a continuous core of explosive encased in a ductile metal sheath, said plug being in tight peripheral engagement with the sheath.

GENERAL DESCRIPTION

According to a first aspect of the presently disclosed subject matter there is provided an explosive bolt system, comprising

- an explosive bolt, comprising a shank having a first longitudinal end, an opposed second longitudinal end and a longitudinal axis, the explosive bolt being configured for securing two elements together between said first longitudinal end and said second longitudinal end; the shank including an internal chamber accommodating a first layer of a high density first secondary explosive material, and further accommodating a second layer of a low density second secondary explosive material in arming communication with the first layer;
- an initiator device positioned with respect to the explosive bolt such that the initiator device is in arming communication with the explosive bolt.

For example, the initiator device has a propagation axis, and comprises a booster secondary explosive element material operatively connected to an initiator secondary explosive material via a command chord.

For example, the initiator device is positioned with respect to the explosive bolt such that the initiator secondary explosive material is in arming communication with the explosive bolt.

Additionally or alternatively, for example, the initiator device is positioned with respect to the explosive bolt such that the initiator secondary explosive material is in arming communication with the internal chamber.

Additionally or alternatively, for example, the initiator device is positioned with respect to the explosive bolt such that the initiator secondary explosive material is in arming communication with the second layer.

Additionally or alternatively, for example, the first layer is longitudinally juxtaposed with the second layer along said longitudinal axis.

Additionally or alternatively, for example, said first layer has a first axial length along said longitudinal axis, wherein said second layer has a second axial length along said longitudinal axis, and wherein said first axial length is shorter than said second axial length.

Additionally or alternatively, for example, the first layer is accommodated in a first chamber portion of the internal chamber and comprises a first quantity of said high density first secondary explosive material, and wherein the second layer is accommodated in a second chamber portion of the internal chamber and comprises a second quantity of said low density second secondary explosive material. For example, said first quantity is about the same as said second quantity; for example, the first quantity is within ±5% of the second quantity by weight.

Additionally or alternatively, for example, said first secondary explosive material comprises a first density, and wherein said second secondary explosive material comprises a second density, wherein said first density is about 1.6 g/cm^3 ±0.05 g/cm^3, and wherein said second density is about 1.4 g/cm^3 ±0.05 g/cm^3.

Additionally or alternatively, for example, each one of said first secondary explosive material and said second secondary explosive material includes any one of nitroaromatics and nitramines.

Additionally or alternatively, for example, each one of said first secondary explosive material and said second secondary explosive material complies at least with the US Department of Defense Design Criteria Standard, Safety Criteria for Fuze Design, designated MIL-STD-131.

Additionally or alternatively, for example, said first secondary explosive material and said second secondary explosive material are the same secondary explosive material. Alternatively, for example, said first secondary explosive material and said second secondary explosive material are different secondary explosive materials with respect to one another.

Additionally or alternatively, for example, each one of said explosive bolt and said initiator device is devoid of primary explosive materials.

Additionally or alternatively, for example, said longitudinal axis and said propagation axis are orthogonal to one another.

Additionally or alternatively, for example, said second layer is in abutting contact with the first layer.

According to a second aspect of the presently disclosed subject matter, there is provided an explosive bolt comprising a shank having a first longitudinal and an opposed second longitudinal end and a longitudinal axis, the explosive bolt being configured for securing two elements together between said first longitudinal end and said second longitudinal end; the shank including an internal chamber accommodating a first layer of a high density first secondary explosive material, and further accommodating a second layer of a low density second secondary explosive material in abutting contact with the first layer.

For example, said first layer has a first axial length along said longitudinal axis, wherein said second layer has a second axial length along said longitudinal axis, and wherein said first axial length is shorter than said second axial length.

Additionally or alternatively, for example, the first layer is accommodated in a first chamber portion of the internal chamber and comprises a first quantity of said high density first secondary explosive material, and wherein the second layer is accommodated

in a second chamber portion of the internal chamber and comprises a second quantity of said low density second secondary explosive material. For example, said first quantity is about the same as said second quantity; for example, the first quantity is within ±5% of the second quantity by weight.

Additionally or alternatively, for example, said first secondary explosive material comprises a first density, and wherein said second secondary explosive material comprises a second density, wherein said first density is about 1.6 g/cm^3 ±0.05 g/cm^3, and wherein said second density is about 1.4 g/cm^3 ±0.05 g/cm^3.

Additionally or alternatively, for example, each one of said first secondary explosive material and said second secondary explosive material includes any one of nitroaromatics and nitramines.

Additionally or alternatively, for example, each one of said first secondary explosive material and said second secondary explosive material complies at least with the US Department of Defense Design Criteria Standard, Safety Criteria for Fuze Design, designated MIL-STD-131.

Additionally or alternatively, for example, said first secondary explosive material and said second secondary explosive material are the same secondary explosive material. Alternatively, for example, said first secondary explosive material and said second secondary explosive material are different secondary explosive materials with respect to one another.

Additionally or alternatively, for example, said explosive bolt is devoid of primary explosive materials.

Additionally or alternatively, for example, said second layer is in abutting contact with the first layer.

Additionally or alternatively, for example, said explosive bolt is configured for being actuated via an initiator device positioned with respect to the explosive bolt such that the initiator device is in arming communication with the explosive bolt.

According to a third aspect of the presently disclosed subject matter, there is provided a connection system for selectively engaging two elements to one another, comprising:

- an explosive bolt system as defined herein regarding the first aspect of the presently disclosed subject matter, wherein one longitudinal end of the explosive bolt is coupled to one of said elements, and another longitudinal end of the bolt is coupled to the other one of said elements;
- a detonator and safe and arm device, operatively coupled to the explosive bolt system.

According to a fourth aspect of the presently disclosed subject matter, there is provided a method for selectively engaging two elements to one another, comprising:

(a) providing an explosive bolt system as defined herein regarding the first aspect of the presently disclosed subject matter;

(b) coupling one longitudinal end of the explosive bolt to one of said elements, and coupling another longitudinal end of the bolt to the other one of said elements;

(c) operatively coupling a detonator and safe and arm device to the explosive bolt system.

According to a fifth aspect of the presently disclosed subject matter, there is provided a method for producing an explosive bolt comprising

- providing a shank having a first longitudinal end, an opposed second longitudinal end and a longitudinal axis, the shank including an internal chamber
- inserting a first quantity of first secondary explosive material in the internal chamber and applying a first compression pressure thereto to form a first layer of a high density said first secondary explosive material;
- inserting a second quantity of second secondary explosive material in the internal chamber over the said first layer and applying a second compression pressure thereto to form a second layer of a low density said second secondary explosive material;
- wherein said first compression pressure is greater than said second compression pressure.

For example, said first material and said second materials are each provided in powder form.

Additionally or alternatively, for example, said first quantity is about the same as said second quantity; for example, the first quantity is within ±5% of the second quantity by weight.

Additionally or alternatively, for example, said first compression pressure compresses the first secondary explosive material to a first density, and wherein said second compression pressure compresses said second secondary explosive material to a second density, wherein said first density is about 1.6 g/cm^3 ±0.05 g/cm^3, and wherein said second density is about 1.4 g/cm^3 ±0.05 g/cm^3.

Additionally or alternatively, for example, each one of said first secondary explosive material and said second secondary explosive material includes any one of nitroaromatics and nitramines.

Additionally or alternatively, for example, each one of said first secondary explosive material and said second secondary explosive material complies at least with the US Department of Defense Design Criteria Standard, Safety Criteria for Fuze Design, designated MIL-STD-131.

Additionally or alternatively, for example, said first secondary explosive material and said second secondary explosive material are the same secondary explosive material. Alternatively, for example, said first secondary explosive material and said second secondary explosive material are different secondary explosive materials with respect to one another.

A feature of at least one example of the present disclosed subject matter is that an explosive bolt system is provided having high safety level.

Another feature of at least one example of the present disclosed subject matter is that an explosive bolt system is provided devoid of any primary explosive material.

BRIEF DESCRIPTION OF THE DRAWINGS

In order to better understand the subject matter that is disclosed herein and to exemplify how it may be carried out in practice, embodiments will now be described, by way of non-limiting example only, with reference to the accompanying drawings, in which:

Fig. 1 is a cross-section side view of an explosive bolt system according to a first example of the presently disclosed subject matter.

Fig. 2 is a cross-section side view of part of the example of Fig. 1.

Fig. 3 is a cross-section side view of the example of Fig. 1 in engaged relationship with two elements.

Fig. 4 is a cross-section side view of the example of Fig. 1 schematically illustrating a contiguous explosive train between the respective detonator and the respective explosive bolt.

DETAILED DESCRIPTION

Referring to Fig. 1, an explosive bolt system according to a first example of the presently disclosed subject matter, generally designated **100** comprises an explosive bolt **200** and an initiator device **300**.

The explosive bolt **200** (also interchangeably referred to herein as any one of "bolt", "connection bolt" or "explosive connection bolt") comprises a shank **250** and a head **268**. The shank **250** has a longitudinal axis **LA**, a first longitudinal end **252** and an opposed second longitudinal end **254**.

Referring also to Fig. 3, the explosive bolt **200** is configured for securing two elements **520**, **540** together between the first longitudinal end **252** and the second longitudinal end **254**. For example, the two elements **520**, **540** can each be a respective end fitting at the respective one of two ends of the respective strap of a Marman clamp that circumferentially holds together two components, for example two stages of a multistage rocket.

In at least this example, and referring again to Fig. 1, the shank **250** includes a threaded portion **262** at the first longitudinal end **242**, a grip portion **264** at the second longitudinal end **242**, and a failure zone portion **266** between the grip portion **264** and the threaded portion **262**.

The head **268** is juxtaposed with the grip portion **264**, and is configured for being grippable by a suitable tool, for example a spanner, for enabling the explosive bolt **200** to the turned about the longitudinal axis **LA**.

The threaded portion **262** comprises an external thread typically complementary to an internal thread of a nut **290**.

Referring again to Fig. 3, the grip portion **264** together with the head **268** are generally configured for cooperating with a respective portion **544** of one element **540**, while the threaded portion **262** together with nut **290** are generally configured for cooperating with a respective portion **522** of the other element **520**, thereby enabling the two elements **520**, **540** to be secured together via the explosive bolt **200**.

In at least this example, the grip portion **264**, the failure zone portion **266** and the threaded portion **262** are integrally formed with one another to form an integral shank **250**. Furthermore in at least this example, the head **268**, the grip portion **264**, the failure zone portion **266** and the threaded portion **262** are integrally formed with one another.

The shank **250** is configured with an internal chamber **270**, which at least in this example is located partially or wholly at a corresponding chamber portion **269** of the failure zone portion **266**. The chamber **270** thus comprises a lower chamber base **271**, upper chamber end **275** and inner peripheral surface **276**, which together define the chamber volume **CV** of internal chamber **270**. The peripheral surface **276** together with the external surface **ES** of the shank **250** at the failure zone portion **266**, in particular at the chamber portion **269**, define the wall thickness **T** of a chamber portion **269** of the failure zone portion **266** corresponding to the chamber **270**.

Referring also to Fig. 2, the chamber **270** accommodates a first layer **L1** of a first high density secondary explosive material **M1**, and further accommodates a second layer **L2** of a second low density secondary explosive material **M2**. The first layer **L1** is

accommodated in a first chamber portion **272** of the chamber **270**, and the second layer **L2** is accommodated in a second chamber portion **274** of the chamber **270**.

The first layer **L1** is in arming communication with the second layer **L2** in the chamber **270**.

The term "arming communication" as used herein refers to the type of communication or contact between first high density secondary explosive material **M1** accommodated in first layer **L1**, and the second low density secondary explosive material **M2** accommodated in second layer **L2**, that is such as to establish a contiguous explosive train between second layer **L2** and the first layer **L1**. For example, such "arming communication" between the second layer **L2** and the first layer **L1** allows a detonation wave to travel from the second secondary material **M2** accommodated in the second layer **L2** to the first high density secondary explosive material **M1** accommodated in first layer **L1**, thereby causing first high density secondary explosive material **M1** accommodated in first layer **L1** to detonate.

In at least this example, the first layer **L1** is in abutting contact with the second layer **L2** in the chamber **270**. In at least this example, the first layer **L1** is longitudinally juxtaposed with the second layer **L2** along the longitudinal axis **LA**.

The first layer **L1** has a first axial length **A1** along the longitudinal axis **LA**, and the second layer **L2** has a second axial length **A2** along the longitudinal axis **LA**.

In at least this example, the summation of the first axial length **A1** and the second axial length **A2** nominally corresponds to the axial length **AL** of the chamber **270**. However, in alternative variations of this example, the summation of the first axial length **A1** and the second axial length **A2** is less than the axial length **AL** of the chamber **270**, providing a corresponding headspace, which can contain air for example.

In at least this example, the first axial length **A1** is shorter than the second axial length **A2**. Such an arrangement can, in at least some applications of this example, reduce the need for high tolerance in the alignment between the explosive bolt **200** and the initiator device **300**, in particular, in the alignment between the initiator device **300** and the second layer **L2**.

For example, a ratio between the second axial length **A2** and the first axial length **A1** can be in the range of between about 1.05 and about 1.20.

In at least one example, first axial length **A1** can be about 4.9mm, and the second axial length **A2** can be about 5.4mm.

In other alternative variation of these examples, the first axial length **A1** can be the same length or greater than the second axial length **A2**.

In the above or other examples, the internal chamber **270** can have an internal diameter of about 7mm.

In at least this example the chamber **270** has uniform transverse cross-section along the full axial length **AL** thereof. Furthermore, the transverse cross-section is axisymmetric, in particular circular, providing a uniform wall thickness **T** for the chamber portion **269**.

In at least some examples, for example in the illustrated example, such a thickness **T** can be about 2.5mm, for example.

Referring again to Fig. 1, the chamber **270** constitutes an end part of a longitudinal bore **259** extending longitudinally from an outer longitudinal end of the head **268** up to lower chamber base **271**. A plug member **280** is provided, configured for sealingly closing part of the bore **259**, extending longitudinally from the outer longitudinal end of the head **268** (or close thereto) up to upper chamber end **275**, thereby creating the chamber **270**.

In alternative variations of this example, the transverse cross-sections of the chamber **270** can be non-circular, and/or, the chamber **270** has a non-uniform transverse cross-section along the full axial length **AL** thereof.

In at least one such example, the chamber **270**, or part thereof can have a frusto-conical shape in which the transverse cross-sectional area decreases in a direction from the second longitudinal end **254** to the first longitudinal end **252**.

In at least one other such example, the chamber **270** has a stepped longitudinal configuration. In such an example, the first chamber portion **272** corresponding to, and coextending along the first axial length **A1** of, the first layer **L1**, and the second chamber portion **274** corresponding to, and coextending along the second axial length **A2** of, the

second layer **L2**, have different transverse widths and/or cross-sectional areas. In such an example, for example, the diameter of the first chamber portion **272** can be greater than, or less than, the diameter of the second chamber portion **274**. For example, an annular sleeve can be provided in the bore **259**, and having an internal lumen corresponding to the plug member **280**, to thereby provide the respective first chamber portion **272** and the respective second chamber portion **274**.

In at least one other such example, the chamber **270** has a transverse offset configuration, wherein the first chamber portion **272** (corresponding to, and coextending along the first axial length **A1** of, the first layer **L1**), is transversely offset with respect to the second chamber portion **274** (corresponding to, and coextending along the second axial length **A2** of, the second layer **L2**). In such an example, for example, the diameter of the first chamber portion **272** can be greater than, equal to, or less than, the diameter of the second chamber portion **274**. However, the central longitudinal axis of the first chamber portion **272** is not coaxial with the central longitudinal axis of the second chamber portion **274** but is instead transversely spaced with respect thereto. Furthermore, the central longitudinal axis of the first chamber portion **272** and/or the central longitudinal axis of the second chamber portion **274** is/are not coaxial with the longitudinal axis **LA**. In such examples, the wall thickness **T** of the respective chamber portion **269**, in particular of the respective first chamber portion **272** and/or of the second chamber portion **274** is correspondingly not uniform circumferentially with respect to the longitudinal axis **LA**. In at least one such example, the wall thickness **T** can have a minimum magnitude at a circumferential part of the chamber portion **269** that is intended to be facing the initiator device **300** during operation of the explosive bolt system **100**.

In at least one other such example, the chamber **270** has a non-axisymmetric or non-circular transverse cross-section, for example along part or all of the first axial length **A1** of the first chamber portion **272**, and/or along part or all of the second axial length **A2** of the second chamber portion **274**.

In at least the illustrated example, and referring again to Fig. 1, the first layer **L1** and the first chamber portion **272** are closer than the second layer **L2** and the second chamber portion **274** with respect to the first longitudinal end **252**. Thus in at least this example, the second layer **L2** and the second chamber portion **274** are closer than the first layer **L1** and

the first chamber portion **272** with respect to the second longitudinal end **254**. However, in at least some alternative variations of this example, first layer **L1** and the first chamber portion **272** are closer than the second layer **L2** and the second chamber portion **274** with respect to the second longitudinal end **254**, and, the second layer **L2** and the second chamber portion **274** are closer than the first layer **L1** and the first chamber portion **272** with respect to the first longitudinal end **252**.

The shank **250**, head **268** and plug member **280** can be made from any suitable material capable of supporting the respective mechanical loads while the explosive bolt **200** is securing the two elements **520**, **540**. In at least this example, the shank **250**, head **268** and plug member **280** are made from stainless steel, for example.

According to an aspect of the presently disclosed subject matter, the explosive bolt **200** comprises only secondary explosive material, and is devoid of any primary explosive material.

In the art, explosive materials are generally classified as being primary explosive materials or secondary explosive materials based on the sensitivity of the explosive materials to initiation or detonation. In general, primary explosive materials are susceptible to being detonated by the application of sufficient heat, which can originate from an ignition source, application of friction or other mechanical force, for example. On the other hand, in general secondary explosive materials are safer to handle and detonate only under specific conditions including the use of a detonator or an initiator device, for example initiator device **300**.

In at least this example, the first secondary explosive material **M1** and the first secondary explosive material **M2** are the same secondary explosive material. However, in alternative variations of this example, the first secondary explosive material **M1** and the first secondary explosive material **M2** are different from one another, i.e., are different secondary explosive materials one from the other.

For example, the first secondary explosive material **M1** and/or the first secondary explosive material **M2** can include nitroaromatics, for example TNT.

For example, the first secondary explosive material **M1** and/or the first secondary explosive material **M2** can include nitramines, for example RDX or CH-6.

In these or other examples, and according to an aspect of the presently disclosed subject matter, the first secondary explosive material **M1** and/or the first secondary explosive material **M2** comply at least with the US Department of Defense Design Criteria Standard, Safety Criteria for Fuze Design, MIL-STD-131, for example MIL-STD-131F, for example any one of the approved Explosives as listed in Table I:

Table I – Approved Explosives

Explosive	**Specification**
Comp A3	MIL-DTL-440
Comp A4	MIL-DTL-440
Comp A5	MIL-DTL-14970
Comp CH6	MIL-C-21723
DIPAM	WS-4660
HNS Type 1 or Type 2 Gr A	WS-5003
HNS-IV	MIL-E-82903
LX-14	MIL-H-48358
PBX 9407	MIL-R-63419
PBXN-5	MIL-E-81111
PBXN-6	WS-12604
PBXN-7	MIL-DTL-82874
PBXN-9	MIL-DTL-82875
PBXN-11	MIL-DTL-32064
PBXN-301	MIL-E-82740
PBXN-12	MIL-DTL-3228

The first layer **L1** is accommodated in a first chamber portion **272** of the chamber **270**, and comprises a first quantity of high density first secondary explosive material **M1**, i.e., in this first quantity of the first secondary explosive material **M1**, the first secondary explosive material **M1** is provided at a first density **DN1**. The second layer **L2** is accommodated in a second chamber portion **274** of the chamber **270**, and comprises a second quantity of high density second secondary explosive material **M2**, i.e., in this second quantity of the second secondary explosive material **M2**, the second secondary explosive

material **M2** is provided at a second density **DN2**. The second quantity of the second secondary explosive material **M2** at second density **DN2** is sufficient to be detonated by the initiator device **300** during operation of the system **100**, and sufficient for detonating the first secondary explosive material **M1** accommodated in the first layer **L1**. The first quantity of high density first secondary explosive material **M1** at first density **DN1** is sufficient to ensure, when detonated, that the explosive bolt **200** breaks and separates into two sections at the failure zone portion **266**.

For example, the first quantity of the first secondary explosive material **M1** can be the same magnitude as the second quantity of the second secondary explosive material **M2**; for example, the first quantity of the first secondary explosive material **M1** is within ±5% of the second quantity of the second secondary explosive material **M2**by weight. For example, the first quantity of the first secondary explosive material **M1** and the second secondary explosive material **M2** can each be about 300mg. In alternative variations of this example, the first quantity of the first secondary explosive material **M1** can be greater or less than the second quantity of the second secondary explosive material **M2.**

According to an aspect of the presently disclosed subject matter, the first density **DN1** is different from the second density **DN2**. In the illustrated example, the first density **DN1** is greater than the second density **DN2**; furthermore, the first density **DN1** is considered to be a "high density" as compared with second density **DN2**, which is considered low density as compared with the first density **DN1**.

For example, the first density **DN1** can be a density of 1.6 g/cm^3 ±0.05 g/cm^3, while the second density **DN2** can be a density of 1.4 g/cm^3 ±0.05 g/cm^3.

In at least this example, the first quantity of first secondary material **M1**, for example in powder form, is inserted into the first chamber portion **272** via the bore **259**, when the plug member **280** is not present. A suitable first compressing tool can then be inserted into the bore **259** and into abutting contact with the first secondary material **M1** in the first chamber portion **272** via the bore **259**. The first secondary material **M1** can then be compressed via the compressing tool until the first density **DN1** is achieved for the first secondary material **M1**, thereby providing the first layer **L1**. For example, such a compressing tool can comprise a bar having diameter slightly smaller than the inside diameter of the bore **259**, and of sufficient axial length such that when fully inserted in the

bore an end of the tool projects outside of the open end of the head **268**. A suitable mechanical stop can be provided for the compression tool and located at a calibrated location such as to limit longitudinal penetration into the bore **259** and chamber **270**, and thus prevent excessive compression of the first secondary material **M1**. The second quantity of second secondary material **M2**, for example in powder form, can then be inserted into the second chamber portion **274**, and added directly over the existing first layer **L1**, via the bore **259**, absent plug member **280**, for example via a suitable second compressing tool that similarly ensures the require second density **DN2** is achieved for the second secondary material **M2**. Thereafter, the plug member **280** can be sealingly inserted into the bore **259**, isolating the chamber **270** and its contents from the outside of the explosive bolt **200**.

Thus, according to an example of a method for producing such an explosive bolt, essentially the first quantity of first secondary explosive material **M1** is inserted into the internal chamber and a first compression pressure is applied thereto via the first compressing tool to form the first layer **L1** of the high density said first secondary explosive material. Then, the second quantity of second secondary explosive material **M2** is inserted into the internal chamber over the said first layer **L1** and a second compression pressure is applied thereto via the second compressing tool to form the second layer **L2** of low density said second secondary explosive material. In at least this example, the first compression pressure is greater than the second compression pressure. The first compression pressure is thus sufficient to compress the first secondary explosive material **M1** to the first density **DN1**, and the second compression pressure is thus sufficient to compress the second secondary explosive material **M2** to the second density **DN2**.

Referring again to Fig. 1, the initiator device **300** is configured for selectively initiating detonation of the explosive bolt **200**, as will become clearer herein.

The initiator device **300** has a propagation axis **PA**, and comprises a booster secondary explosive element material **320** operatively connected to an initiator secondary explosive material **340** via a command chord **360**.

The booster secondary explosive element material **320** is provided at one longitudinal end **310** of the initiator device **300**, and the booster secondary explosive element material **320** is operatively connected to the safe and arm device **400** in operation of the system **100**.

The initiator secondary explosive material **340** is provided at the opposed longitudinal end **390** of the initiator device **300**.

The booster secondary explosive element material **320**, the initiator secondary explosive material **340** and the command chord **360** are each secondary explosive materials. The booster secondary explosive element material **320**, the initiator secondary explosive material **340** and the command chord **360** can be the same secondary explosive material with respect to one another, or, the booster secondary explosive element material **320**, the initiator secondary explosive material **340** and the command chord **360** can be different secondary explosive materials with respect to one another. For example, the booster secondary explosive element material **320** and/or the initiator secondary explosive material **340** and/or the command chord **360** can include nitroaromatics, for example TNT, or can include nitramines, for example RDX or CH-6. In these or other examples, and according to an aspect of the presently disclosed subject matter, the booster secondary explosive element material **320** and/or the initiator secondary explosive material **340** and/or the command chord **360** comply at least with the US Department of Defense Design Criteria Standard, Safety Criteria for Fuze Design, MIL-STD-131, for example MIL-STD-131F, for example any one of the approved Explosives as listed in Table I above.

The booster secondary explosive element material **320** and/or the initiator secondary explosive material **340** and/or the command chord **360** can be the same secondary explosive materials as, or can be different from, the first secondary explosive material **M1** and/or the first secondary explosive material **M2**.

According to an aspect of the presently disclosed subject matter, the initiator device **300** comprises only secondary explosive material, and is devoid of any primary explosive material.

The initiator device **300** is positioned, particularly in alignment, with respect to the explosive bolt **200** such that the initiator device **300** is in arming communication with the explosive bolt **200**. In particular, the initiator device **300** is positioned with respect to the explosive bolt **200** such that the initiator secondary explosive material **340** is in arming communication with the explosive bolt **200**. More in particular, the initiator device **300** is positioned with respect to the explosive bolt **200** such that the initiator secondary explosive material **340** is in arming communication with the chamber **270**. More in particular, the

initiator device **300** is positioned with respect to the explosive bolt **200** such that the initiator secondary explosive material **340** is in arming communication with the second layer **L2**.

The term "arming communication" as also used herein refers to the type of communication or contact ultimately between initiator secondary explosive material **340** and the second secondary material **M2** accommodated in the second layer **L2** that is such as to establish a contiguous explosive train between the initiator device **300** and the explosive bolt **200**. For example, such "arming communication" between the initiator device **300** and the explosive bolt **200** allows a detonation wave to travel from the initiator device **300** to the explosive bolt **200**, in particular from the initiator secondary explosive material **340** to the second secondary material **M2** accommodated in the second layer **L2**, thereby causing the second secondary material **M2** accommodated in the second layer **L2** to detonate.

In at least this example, the initiator device **300** is positioned with respect to the explosive bolt **200** such that the initiator secondary explosive material **340** is facing, and in close proximity to or in abutment with, the explosive bolt **200**.

In particular, the initiator device **300** is positioned with respect to the explosive bolt **200** such that initiator secondary explosive material **340** is facing, and in close proximity to or in abutment with, the failure zone portion **266.**

More in particular, the initiator device **300** is positioned with respect to the explosive bolt **200** such that initiator secondary explosive material **340** is facing, and in close proximity to or in abutment with, the chamber portion **269**.

More in particular, the initiator device **300** is positioned with respect to the explosive bolt **200** such that initiator secondary explosive material **340** is facing, and in close proximity to or in abutment with, a part of the chamber portion **269** corresponding to the second layer **L2**.

In at least this example, the width **W** of the initiator secondary explosive material **340** in a direction parallel to the longitudinal axis **LA** of the explosive bolt **200** is about the same magnitude as the second axial length **A2**.

In at least this example, the propagation axis **PA** is orthogonal to the longitudinal axis **LA**. Furthermore in at least this example, the propagation axis **PA** intersects the longitudinal axis **LA**.

However, in at least some alternative variations of this example, the propagation axis **PA** can be at any suitable non-parallel angular orientation with respect to the longitudinal axis **LA**, for example any one of 30°, 45°, 60°, 80°. Additionally or alternatively, in such examples the propagation axis **PA** does not intersect the longitudinal axis **LA** and is instead the propagation axis **PA** is offset with respect to the longitudinal axis **LA**. However, in such cases, the orientation and relative spatial disposition of the propagation axis **PA** with respect to the longitudinal axis **LA** is still such that the initiator secondary explosive material **340** is ion arming communication with the second layer **L2**, for example facing, and in close proximity to or in abutment with the external wall of the first chamber portion **272** corresponding to the second layer **L2**.

Referring also to Fig. 3, when the system **100** is used as part of a connection system **600** for selectively engaging two elements to one another, for example, the initiator device **300** is operatively coupled to a detonator **500** via a safe and arm device **400**. In at least this example, the detonator **500** and the safe and arm device **400** are together configured as an integral and self-contained component, and provides isolation of the relatively insensitive secondary explosives of the initiator device **300** from external stimuli that could otherwise transfer enough energy to initiate the detonator **500**. Such isolation can be provided by a mechanical barrier between the detonator **500** and the secondary explosives of the initiator device **300** when the safe and arm device **400** is in the safe mode, and the mechanical barrier is an integral part of the safe and arm device **400**. The mechanical barrier operates to block transmission of any explosive shock from the detonator to the initiator device **300** that may occur in response to any such stimuli. In the armed mode, the mechanical barrier is removed, and is replaced with a transfer lead that allows energy from the detonator **500** to flow to the secondary explosives of initiator device **300** and detonate the same, typically in response to the detonator **500** receiving a command signal from a controller, for example when it is desired to separate the two elements **520**, **540**.

In operation of the system **100** in such a connection system **600**, and referring to Fig. 4, a command signal is transmitted to the detonator **500** and the safe and arm device **400**.

The safe and arm device **400** switches to arm mode from safe mode, by removing the mechanical barrier between the detonator **500** and the initiator device **300**. The detonator **500** initiates and establishes a contiguous explosive train **ET** between the detonator **500** and the explosive bolt **200**. Responsive to receiving such a command signal, the detonator **500** generates a detonation wave that travels from the detonator **500** through the safe and arm device **400** and to the initiator device **300**, detonating first the booster secondary explosive element material **320**, which in turn detonates the initiator secondary explosive material **340** via propagation of the detonation wave through the command chord **360**. Detonation of the initiator secondary explosive material **340** causes the detonation wave in the contiguous explosive train **ET** to detonate the second secondary material **M2** accommodated in the second layer **L2**, which in turn causes the first secondary material **M1** accommodated in the first layer **L1** to detonate. The detonation of the first secondary material **M1** accommodated in the first layer **L1** in the final portion of the contiguous explosive train **ET** results in the rupture or break of the explosive bolt **200**, in particular at the failure zone portion **266**, in the vicinity of the chamber portion **269**, which splits and separates the explosive bolt **200** into two major portions, thereby disengaging the elements **520**, **540** from one another.

In the method claims that follow, alphanumeric characters and Roman numerals used to designate claim steps are provided for convenience only and do not imply any particular order of performing the steps.

Finally, it should be noted that the word “comprising” as used throughout the appended claims is to be interpreted to mean “including but not limited to”.

While there has been shown and disclosed examples in accordance with the presently disclosed subject matter, it will be appreciated that many changes may be made therein without departing from the scope of the presently disclosed subject matter as set out in the claims.

CLAIMS:

1. Explosive bolt system, comprising

- an explosive bolt, comprising a shank having a first longitudinal end, an opposed second longitudinal end and a longitudinal axis, the explosive bolt being configured for securing two elements together between said first longitudinal end and said second longitudinal end; the shank including an internal chamber accommodating a first layer of a high density first secondary explosive material, and further accommodating a second layer of a low density second secondary explosive material in arming communication with the first layer;
- an initiator device positioned with respect to the explosive bolt such that the initiator device is in arming communication with the explosive bolt.

2. The explosive bolt system according to claim 1, wherein the initiator device has a propagation axis, and comprises a booster secondary explosive element material operatively connected to an initiator secondary explosive material via a command chord.

3. The explosive bolt system according to claim 2, wherein the initiator device is positioned with respect to the explosive bolt such that the initiator secondary explosive material is in arming communication with the explosive bolt.

4. The explosive bolt system according to any one of claims 2 to 3, wherein the initiator device is positioned with respect to the explosive bolt such that the initiator secondary explosive material is in arming communication with the internal chamber.

5. The explosive bolt system according to any one of claims 2 to 4, wherein the initiator device is positioned with respect to the explosive bolt such that the initiator secondary explosive material is in arming communication with the second layer.

6. The explosive bolt system according to any one of claims 1 to 5, wherein the first layer is longitudinally juxtaposed with the second layer along said longitudinal axis.

7. The explosive bolt system according to any one of claims 1 to 6, wherein said first layer has a first axial length along said longitudinal axis, wherein said second layer has a second axial length along said longitudinal axis, and wherein said first axial length is shorter than said second axial length.

8. The explosive bolt system according to any one of claims 1 to 7, wherein the first layer is accommodated in a first chamber portion of the internal chamber and comprises a first quantity of said high density first secondary explosive material, and wherein the second layer is accommodated in a second chamber portion of the internal chamber and comprises a second quantity of said low density second secondary explosive material.

9. The explosive bolt system according to claim 8, wherein said first quantity is about the same as said second quantity.

10. The explosive bolt system according to any one of claims 1 to 9, wherein said first secondary explosive material comprises a first density, and wherein said second secondary explosive material comprises a second density, wherein said first density is about 1.6 g/cm^3 ± 0.05 g/cm^3, and wherein said second density is about 1.4 g/cm^3 ± 0.05 g/cm^3.

11. The explosive bolt system according to any one of claims 1 to 10, wherein each one of said first secondary explosive material and said second secondary explosive material includes any one of nitroaromatics and nitramines.

12. The explosive bolt system according to any one of claims 1 to 11, wherein each one of said first secondary explosive material and said second secondary explosive material complies at least with the US Department of Defense Design Criteria Standard, Safety Criteria for Fuze Design, designated MIL-STD-131.

13. The explosive bolt system according to any one of claims 1 to 12, wherein said first secondary explosive material and said second secondary explosive material are the same secondary explosive material.

14. The explosive bolt system according to any one of claims 1 to 12, wherein said first secondary explosive material and said second secondary explosive material are different secondary explosive materials with respect to one another.

15. The explosive bolt system according to any one of claims 1 to 14, wherein each one of said explosive bolt and said initiator device is devoid of primary explosive materials.

16. The explosive bolt system according to any one of claims 2 to 15, wherein said longitudinal axis and said propagation axis are orthogonal to one another.

17. The explosive bolt system according to any one of claims 1 to 16, wherein said second layer is in abutting contact with the first layer.

18. An explosive bolt comprising a shank having a first longitudinal and an opposed second longitudinal end and a longitudinal axis, the explosive bolt being configured for securing two elements together between said first longitudinal end and said second longitudinal end; the shank including an internal chamber accommodating a first layer of a high density first secondary explosive material, and further accommodating a second layer of a low density second secondary explosive material in abutting contact with the first layer.

19. The explosive bolt according to claim 18, wherein said first layer has a first axial length along said longitudinal axis, wherein said second layer has a second axial length along said longitudinal axis, and wherein said first axial length is shorter than said second axial length.

20. The explosive bolt according to any one of claims 18 to 19, wherein the first layer is accommodated in a first chamber portion of the internal chamber and comprises a first quantity of said high density first secondary explosive material, and wherein the second layer is accommodated in a second chamber portion of the internal chamber and comprises a second quantity of said low density second secondary explosive material.

21. The explosive bolt system according to claim 20, wherein said first quantity is about the same as said second quantity.

22. The explosive bolt according to any one of claims 18 to 21, wherein said first secondary explosive material comprises a first density, and wherein said second secondary explosive material comprises a second density, wherein said first density is about 1.6 g/cm^3 ± 0.05 g/cm^3, and wherein said second density is about 1.4 g/cm^3 ± 0.05 g/cm^3.

23. The explosive bolt according to any one of claims 18 to 22, wherein each one of said first secondary explosive material and said second secondary explosive material includes any one of nitroaromatics and nitramines.

24. The explosive bolt according to any one of claims 18 to 23, wherein each one of said first secondary explosive material and said second secondary explosive material complies at

least with the US Department of Defense Design Criteria Standard, Safety Criteria for Fuze Design, designated MIL-STD-131.

25. The explosive bolt according to any one of claims 18 to 24, wherein said first secondary explosive material and said second secondary explosive material are the same secondary explosive material.

26. The explosive bolt according to any one of claims 18 to 24, wherein said first secondary explosive material and said second secondary explosive material are different secondary explosive materials with respect to one another.

27. The explosive bolt according to any one of claims 18 to 26, wherein said explosive bolt is devoid of primary explosive materials.

28. The explosive bolt according to any one of claims 18 to 27, wherein said second layer is in abutting contact with the first layer.

29. The explosive bolt according to any one of claims 18 to 28, wherein said explosive bolt is configured for being actuated via an initiator device positioned with respect to the explosive bolt such that the initiator device is in arming communication with the explosive bolt.

30. A connection system for selectively engaging two elements to one another, comprising:

- an explosive bolt system as defined in any one of claims 1 to 17, wherein one longitudinal end of the explosive bolt is coupled to one of said elements, and another longitudinal end of the bolt is coupled to the other one of said elements;
- a detonator and safe and arm device, operatively coupled to the explosive bolt system.

31. A method for selectively engaging two elements to one another, comprising:

(a) providing an explosive bolt system as defined in any one of claims 1 to 17;

(b) coupling one longitudinal end of the explosive bolt to one of said elements, and coupling another longitudinal end of the bolt to the other one of said elements;

(c) operatively coupling a detonator and safe and arm device to the explosive bolt system.

32. A method for producing an explosive bolt comprising

- providing a shank having a first longitudinal end, an opposed second longitudinal end and a longitudinal axis, the shank including an internal chamber
- inserting a first quantity of first secondary explosive material in the internal chamber and applying a first compression pressure thereto to form a first layer of a high density said first secondary explosive material;
- inserting a second quantity of second secondary explosive material in the internal chamber over the first layer and applying a second compression pressure thereto to form a second layer of a low density said second secondary explosive material;
- wherein said first compression pressure is greater than said second compression pressure.

33. The method according to claim 32, wherein said first material and said second materials are each provided in powder form.

34. The method according to any one of claims 32 to 33, wherein said first quantity is about the same as said second quantity.

35. The method according to any one of claims 32 to 34, wherein said first compression pressure compresses the first secondary explosive material to a first density, and wherein said second compression pressure compresses said second secondary explosive material to a second density, wherein said first density is about 1.6 g/cm^3 ±0.05 g/cm^3, and wherein said second density is about 1.4 g/cm^3 ±0.05 g/cm^3.

36. The method according to any one of claims 32 to 34, wherein each one of said first secondary explosive material and said second secondary explosive material includes any one of nitroaromatics and nitramines.

37. The method according to any one of claims 32 to 36, wherein each one of said first secondary explosive material and said second secondary explosive material complies at least with the US Department of Defense Design Criteria Standard, Safety Criteria for Fuze Design, designated MIL-STD-131.

38. The method according to any one of claims 32 to 37, wherein said first secondary explosive material and said second secondary explosive material are the same secondary explosive material.

39. The explosive bolt according to any one of claims 32 to 37, wherein said first secondary explosive material and said second secondary explosive material are different secondary explosive materials with respect to one another.

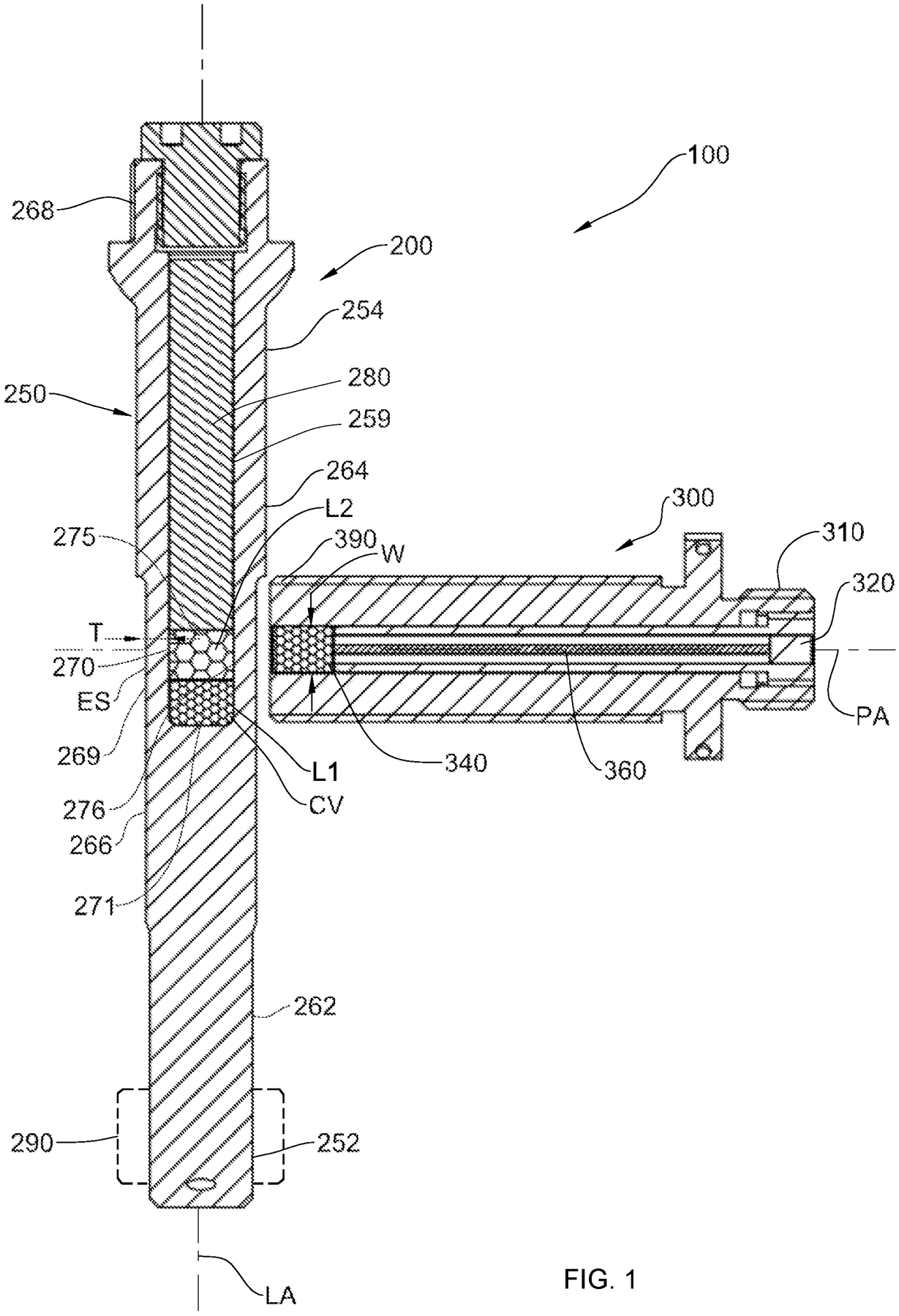
100
268
200
254
250
280
259
264
L2
300
310
275
390
W
320
T
270
ES
269
L1
340
360
PA
276
CV
266
271
262
290
252
LA

FIG. 1

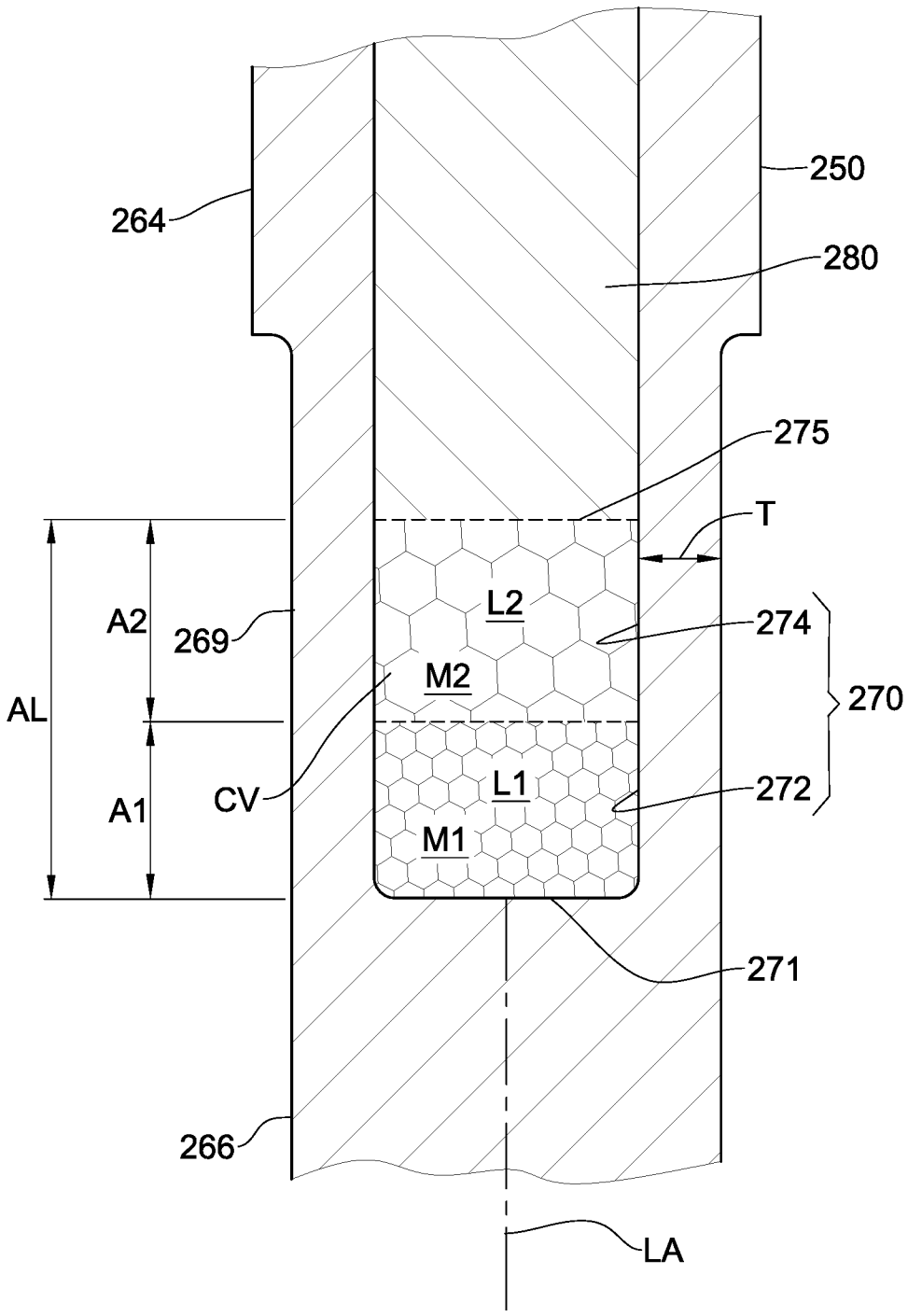

FIG. 2

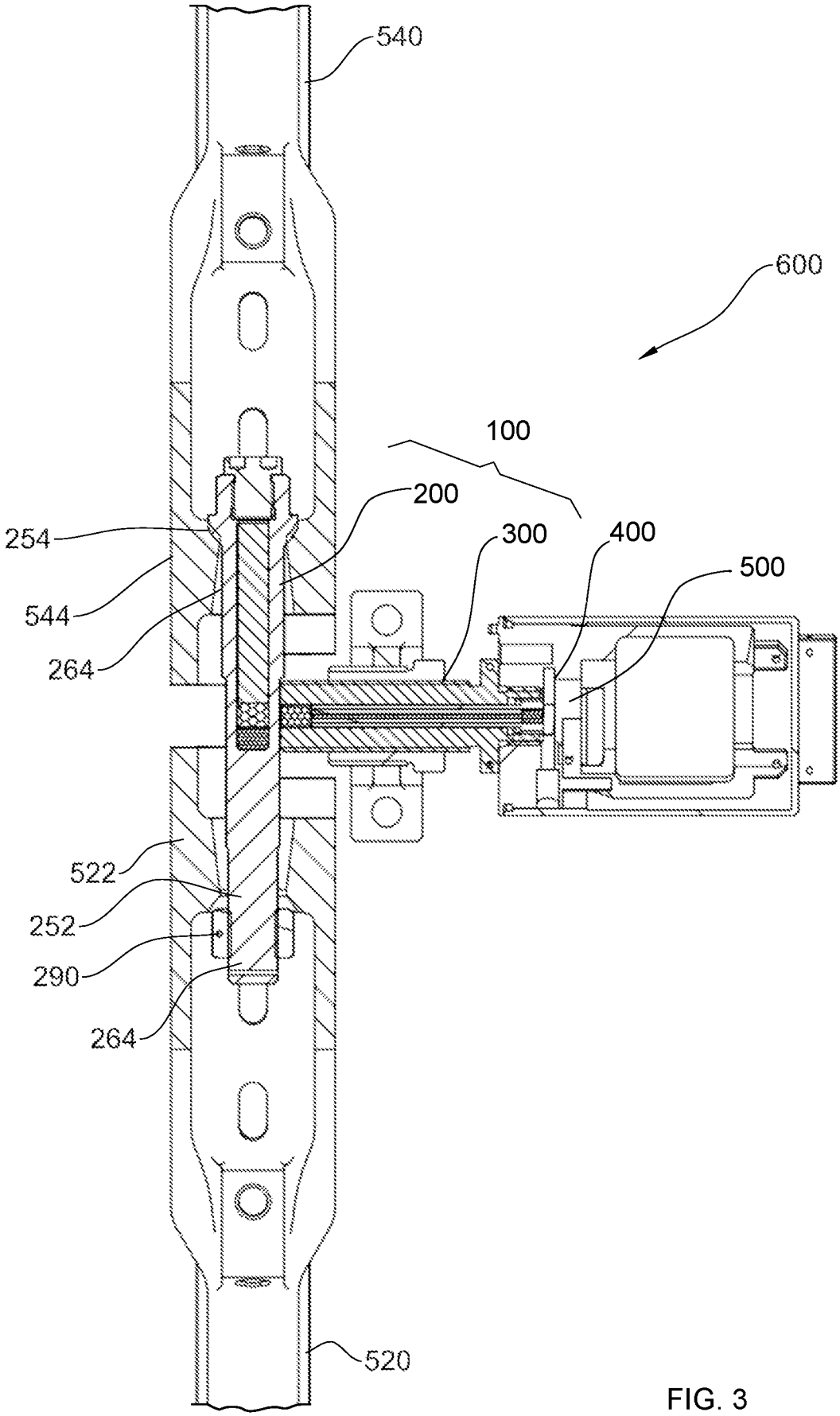

FIG. 3

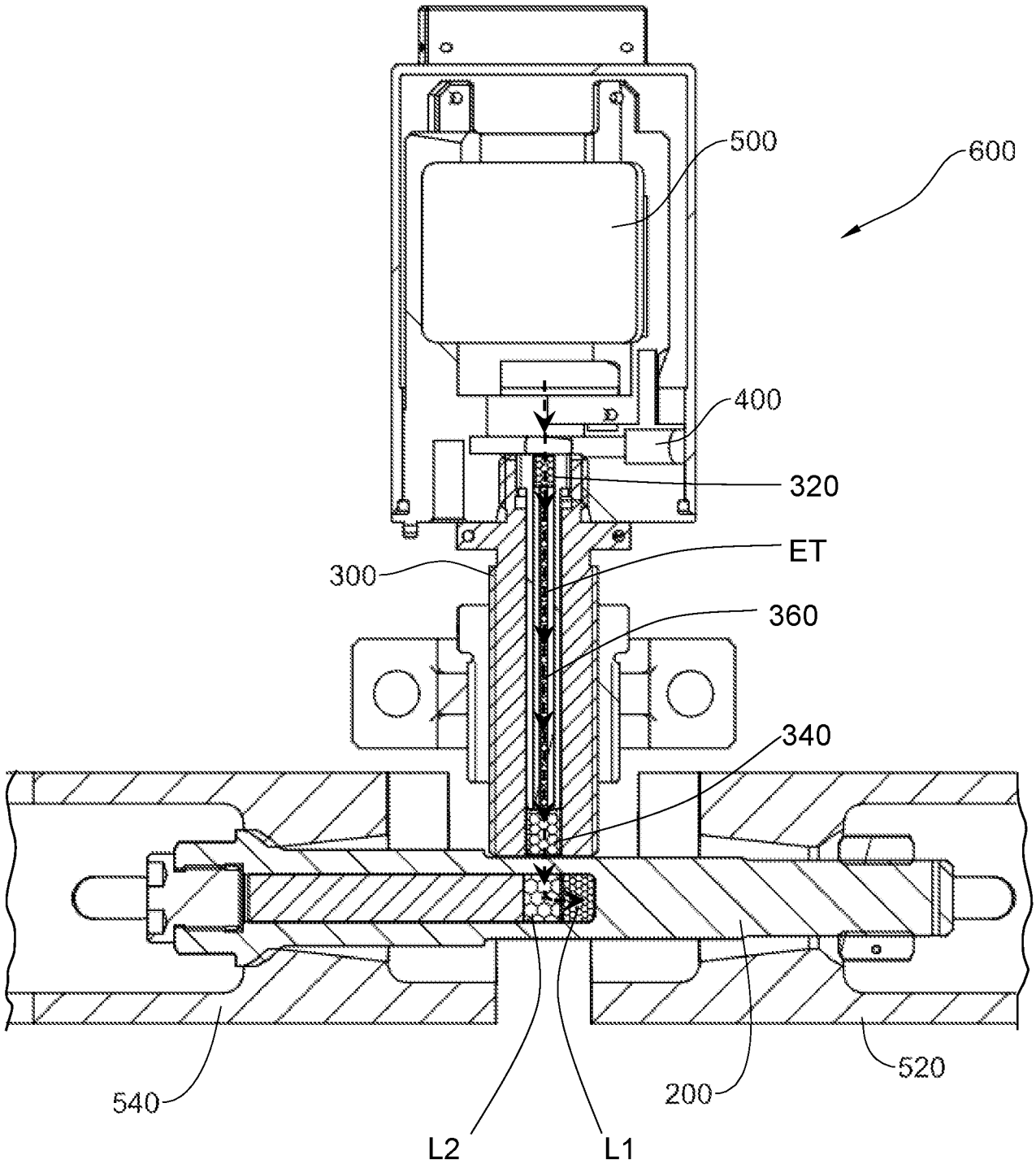

FIG. 4

INTERNATIONAL SEARCH REPORT

International application No.
PCT/IL2022/051401

A. CLASSIFICATION OF SUBJECT MATTER

F16B 31/00(2023.01)i; ***F42B 3/00***(2023.01)i; ***B64G 1/64***(2023.01)i
CPC:F16B 31/005; F42B 3/006; B64G 1/64

According to International Patent Classification (IPC) or to both national classification and IPC

B. FIELDS SEARCHED

Minimum documentation searched (classification system followed by classification symbols)

F16B 31/00; F42B 3/00; B64G 1/64
CPC:F16B 31/005; F42B 3/006; B64G 1/64

Documentation searched other than minimum documentation to the extent that such documents are included in the fields searched

Electronic data base consulted during the international search (name of data base and, where practicable, search terms used)

Databases consulted: Orbit, Similari (AI-based)

C. DOCUMENTS CONSIDERED TO BE RELEVANT

Category*	Citation of document, with indication, where appropriate, of the relevant passages	Relevant to claim No.
A	KR 102124079 B1 (HANWHA CORP [KR]) 17 June 2020 (2020-06-17) The whole document	1-39
A	DE 102012018600 A1 (AUDI AG [DE]) 20 March 2014 (2014-03-20) The whole document	1-39

☐ Further documents are listed in the continuation of Box C.

☑ See patent family annex.

* Special categories of cited documents:
"A" document defining the general state of the art which is not considered to be of particular relevance
"D" document cited by the applicant in the international application
"E" earlier application or patent but published on or after the international filing date
"L" document which may throw doubts on priority claim(s) or which is cited to establish the publication date of another citation or other special reason (as specified)
"O" document referring to an oral disclosure, use, exhibition or other means
"P" document published prior to the international filing date but later than the priority date claimed
"T" later document published after the international filing date or priority date and not in conflict with the application but cited to understand the principle or theory underlying the invention
"X" document of particular relevance; the claimed invention cannot be considered novel or cannot be considered to involve an inventive step when the document is taken alone
"Y" document of particular relevance; the claimed invention cannot be considered to involve an inventive step when the document is combined with one or more other such documents, such combination being obvious to a person skilled in the art
"&" document member of the same patent family

Date of the actual completion of the international search	Date of mailing of the international search report
05 March 2023	**05 March 2023**

Name and mailing address of the ISA/IL	Authorized officer
Israel Patent Office **Technology Park, Bldg.5, Malcha, Jerusalem, 9695101, Israel** **Israel** Telephone No. **972-73-3927181** Email: **pctoffice@justice.gov.il**	**CHOVER Nimrod Israel** Telephone No.

INTERNATIONAL SEARCH REPORT
Information on patent family members

International application No.
PCT/IL2022/051401

Patent document cited in search report	Publication date (day/month/year)	Patent family member(s)	Publication date (day/month/year)
KR 102124079 B1	17 June 2020	KR 102124079 B1	17 June 2020
DE 102012018600 A1	20 March 2014	DE 102012018600 A1	20 March 2014
		DE 102012018600 B4	12 February 2015