Feb. 17, 1931. E. S. SHIELDS 1,792,714

FOLDING TABLE

Filed May 26, 1927

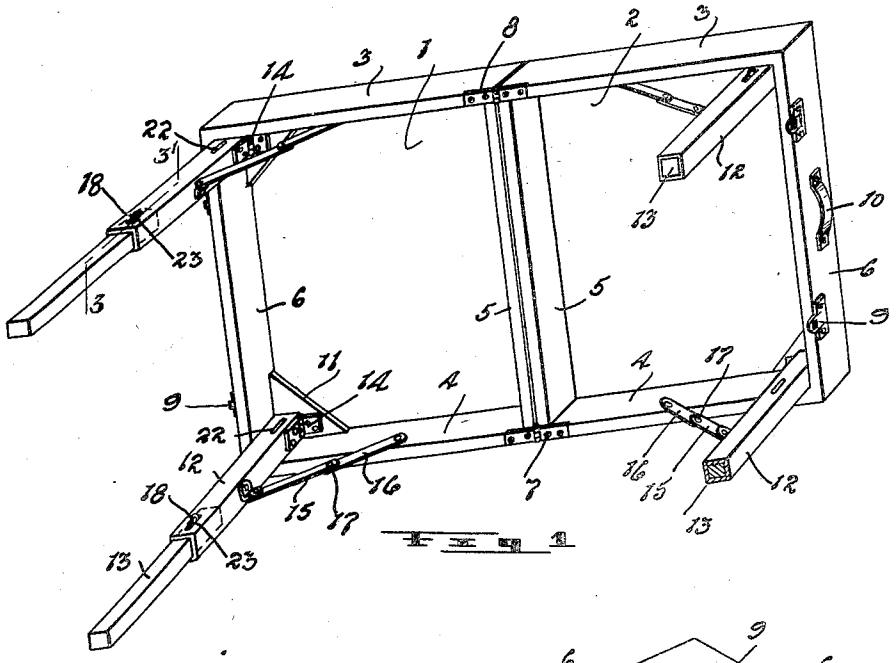

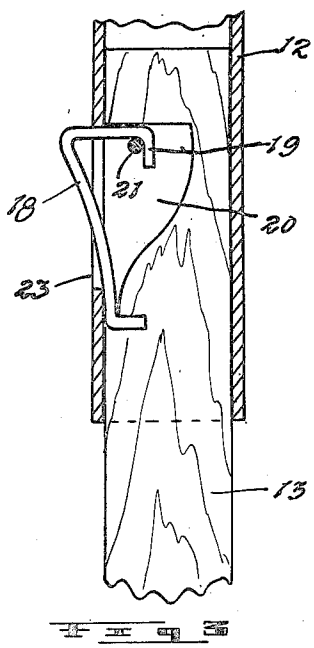

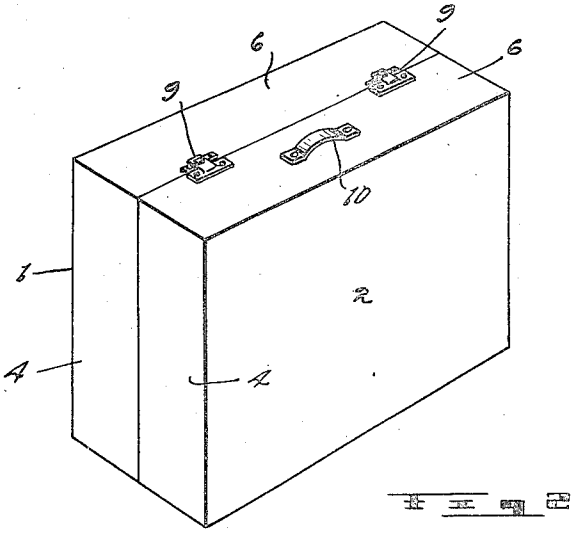

Inventor

E.S. Shields

By Fitzsimmons & Co

Patented Feb. 17, 1931

1,792,714

UNITED STATES PATENT OFFICE

ERNEST SCOTT SHIELDS, OF WINNIPEG, MANITOBA, CANADA

FOLDING TABLE

Application filed May 26, 1927. Serial No. 194,480.

The invention relates to improvements in folding tables and an object of the invention is to provide a table which can be readily opened up for use as a table and is easily folded and when folded takes the form of a locked box which can be readily carried about.

A further object of the invention is to provide a folding table having telescoping legs which permit the table top to be set at varying heights depending on the setting of the legs, means being provided for holding the legs in various adjusted positions.

A further object of the invention is to provide a table having the legs so that they can be quickly and easily folded within the table top.

With the above more important objects in view, the invention consists essentially in the arrangement and construction of parts hereinafter more particularly described, reference being had to the accompanying drawing, in which:—

Fig. 1 is a perspective view of the folding table, two of the legs being shown in their fully extended position, one of the legs having the sections thereof telescoped and the other of the legs being broken away.

Fig. 2 is a perspective view of the table when in the folded condition.

Fig. 3 is an enlarged detailed sectional view at 3—3′ Figure 1.

In the drawing like characters of reference indicate corresponding parts in the several figures.

The top of the table is formed from two similar substantially rectangular leaves 1 and 2 which have their edges reinforced with depending marginal strips or flanges 3, 4, 5 and 6 and the adjacent end strips of the leaves are pivotally connected together by countersunk hinges 7 and 8. In this way, one can fold or close the box-like top sections to form a case as shown in Figure 2 and suitable releasable fasteners 9 are provided to releasably secure the folded sections together. A grip 10 also is attached to one of the flanges 6 so that the closed device can be conveniently carried.

The outer corners of the top sections are reinforced by triangular reinforcing plates 11 suitably secured to the leaves and the flanges. When the table top is opened up, the two inner flanges 5 lie side by side and the upper faces of the leaves 1 and 2 are contained in the same plane.

In each of the outer corners of the box-like sections, I locate a table leg, the details of which are now described. Each leg comprises an upper tubular section 12 and a lower section 13 telescopically received within the upper section. I have herein shown the upper and lower sections as square in cross section. The upper end of the upper section of each leg is pivotally fastened to the corner of the leaf by a hinge 14 and the length of the upper section and the position of the hinge is such that the said section can be swung inwardly to take a stored position between the end flanges 5 and 6 and parallel to the adjacent side flange. The said section is also positioned such that when it is extended to lie at right angles to the leaf, the upper end of the section engages in the corner formed at the juncture of the side and end flanges.

Releasable means is provided for holding the upper section of the leg in its extended position, such embodying two links 15 and 16 which have their inner ends pivotally connected together at 17 and their outer ends pivotally connected to the said section and to the adjacent side flange. The type of releasable fastening shown is as customarily used on folding tables and a further description of the same is not herein given.

The extension or lower section 13 of the leg is provided adjoining its upper end with a spring catch 18 having one end suitably fastened to the section and the other end inturned and hooked as indicated at 19. The inturned hooked end is received within a suitable pocket 20 formed in the said section and a pin 21 crosses the pocket and limits the out sprung position of the catch. The upper leg section is provided with upper and lower slots 22 and 23 and these slots are adapted to receive the spring catch in the manner best shown in Figure 3. When the section 13 of the leg is in its fully telescoped position, the spring catch is in the slot 22 and acts to prevent the end shifting of the section 13. When

the leg section 13 is extended, the spring catch is in the slot 23 and will prevent the in moving of the section 13 as the inturned end of the catch is at such time contacting with the upper end of the slot 23.

This table is particularly useful for camping purposes as one can set the table on varying levels. If it is desired to use chairs, the table top will be opened up and the legs fully extended. If one, however, desires to sit on the ground, the table top is opened up and the upper sections of the legs are swung out but the sections 13 are not extended. When the table is not in use, the legs are folded in to take their stacked position within the table top sections and then the sections are closed and locked into the form shown in Figure 2. As the flanges 3, 4, 5 and 6 are relatively deep, there is considerable storage space within the case formed by the folding of the table and one can put various articles in the case when travelling about.

What I claim as my invention is:—

The combination with a table top having side and end strips secured thereto, of collapsible corner legs for adjustably supporting the table and each embodying a tubular upper section of predetermined length adapted in the extended position thereof to butt the side and end strips at the corner of the top and fastened to the table top by a hinge, said hinge permitting of the folding of the leg in a position parallel to the side strip, a lower section telescopically received within the upper section, a spring catch carried by the lower section and adapted to enter upper and lower slots provided in the tubular leg section and when so entered to lock the lower leg section in withdrawn and extended positions and a foldable angle brace extending between the upper leg section and the side strip of the table top.

Signed at Winnipeg this 11th day of May, 1927.

E. SCOTT SHIELDS.